CHAPTER 16

EXCESS LAND
TABLE OF CONTENTS

16.01.00.00	**GENERAL**
01.00	Function and Responsibility
02.00	Creation of Excess Land
03.00	Definitions
03.01	Excess Land
03.02	Inventory Parcel
03.03	Non-Inventory Parcel
03.04	Planning Parcel
03.05	Disposal Unit
03.06	Inventory Value (VTA)
03.07	Acquisition Price (Pro Rata Cost)
03.08	Direct Conveyance of Easements
03.09	Direct Conveyance Pursuant to Cooperative Agreement
03.10	Direct Fee Sale to Government Agencies
03.11	Direct Sale to Eligible Present Occupants
03.12	Direct Sale to Former Owners
03.13	Direct Sale to Housing Entity
03.14	Exchange Per Contract
03.15	Finding “A” Sales
03.16	Finding “B” Sales
03.17	Miscellaneous Conveyances
03.18	Appraised Value
03.19	Nominal Value Appraisals
03.20	Public Sale Estimate (PSE)
03.21	Private Sale
03.22	Public Sale
04.00	Organization
05.00	Review of Appraisal Maps
06.00	Map Review Prior to Plans, Specifications, and Estimates (PS&E)
07.00	Parcel File
08.00	Parcel Diary
09.00	Excess Land Parcel Acquisition/Disposal Summary (Form RW 16-1)
10.00	Excess Land Inventory Memorandum (Form RW 16-28)
11.00	Excess Land Fiscal Transmittal (Form RW 16-29)
12.00	Discriminatory Rezoning
13.00	Initiating Zoning Upgrades of Excess Land

16.02.00.00 EXCESS LAND INVENTORY
01.00 Inventory
02.00 Inventory Categories
03.00 Inventory Process and Control
04.00 RPRRC and Transmittal of Hold Requests
05.00 Inventory Value - Value at Time of Acquisition (VTA)
05.01 Items Not Included in VTA
05.02 Adjustments to VTA
06.00 Annual Inventory Review

16.03.00.00 CLEARANCE PROCEDURES
01.00 Various Functional Reviews
02.00 Environmental Compliance
03.00 Hazardous Substances
03.01 Lead-Based-Paint Disclosure
04.00 Notices to Other State Agencies
05.00 Offers to Local Public Agencies and State Resources Agency
06.00 Outdoor Advertising Signs
07.00 Clearance of Other Items

16.04.00.00 EXCESS LAND APPRAISAL
01.00 General
02.00 Public Sale Estimates (PSE)
03.00 Market Value Appraisals
04.00 Nominal Value Appraisals

16.05.00.00 DISPOSAL METHODS AND PROCEDURES
01.00 General
02.00 Methods of Disposal
03.00 Internal Transfers
03.01 Incorporation of Excess Parcels Within Operating Right of Way
03.02 Inter-Program Transfers
03.03 Charging Excess Land to Projects
04.00 Public Sales
04.01 General
04.02 Purchase Agreement (RW 16-5 and RW 16-6)
04.03 Default or Withdrawal of Highest Bidder
04.04 Minimum Bids
04.05 Unannounced Minimum Bid
04.06 Credit Term Agreement (RW 16-5)
04.07 Notice of Surplus Real Estate Sale (RW 16-4)
04.08 Posting of Property and Physical Inspection
04.09 Public Sales of Landlocked Parcels
04.10 Transfer Costs

16.05.00.00 DISPOSAL METHODS AND PROCEDURES (Continued)

04.11 Oil, Gas, and Mineral Reservations
04.12 Delinquent Taxes
04.13 Mailing List
04.14 Advertising Excess Property - Public Sale
04.15 Conduct of Public Auction Sales
04.16 Personal Checks
04.17 Conduct of Sealed Bid Sales
04.18 Notification of Tenants
04.19 Sale of Excess Land and Improvements Leased as Resident Engineer's Offices
04.20 Public Sale of Fragmentary Remainders
04.21 Protection of Improvements on Excess Land Following Public Sale
04.22 Change in Terms and Conditions of Sale Subsequent to Publication of Sales Notice
04.23 Eviction of Occupants of Excess Property
05.00 Direct Sale to Adjoining Owners, Finding A and B
05.01 Adjustment of Sales Price to Adjacent Owners
05.02 Payment of Recording Fees - Purchase Consideration $100 or Less
05.03 Finding A and B Sales to Other Governmental Agencies
05.04 Informal Time Payment Sales, Finding A or B
06.00 Direct Sale to Eligible Present Occupants
06.01 Direct Sale of Commercial Property Pursuant to S&H Code Section 118.1
06.02 Direct Sale to Present Residential Tenant-Occupant at Fair Market Value
07.00 Private Sale Among Adjoining Owners
08.00 Exchange by Right of Way Contract
09.00 Other Direct Conveyances
09.01 Governmental Agencies
09.02 Direct Sales to Governmental Agencies
09.03 Conveyances to Utility Companies
09.04 Cooperative Agreements
09.05 Joint Exercise of Powers Agreement With Department of Parks and Recreation (Exhibit 16-EX-8)
10.00 Coastal Zone
11.00 Transfer of Control and Possession
12.00 Requests to Decertify and Purchase
13.00 Option-Purchase Agreement up to Two Years (Public Sales and Qualifying Direct Sales)
14.00 Lease-Purchase Agreement and Partnering with an Adjoining Owner (Public Sales and Qualifying Direct Sales)
15.00 Use of Private Brokers (Including Public Auction Brokerages)
16.00 Relinquishment or Sale of Access Rights Requiring FHWA Approval

16.06.00.00 FEDERAL HIGHWAY ADMINISTRATION REQUIREMENTS ON DISPOSAL OF EXCESS LAND

01.00 General Policy Regarding Acquisition of Excess

16.07.00.00 PROCESSING TRANSACTIONS
01.00 General
02.00 Deed Approval Delegated to Region/Districts
03.00 Transmittal of Director's Deed to HQ R/W
04.00 Deadline for Submitting Package to HQ R/W - CTC-Approved Deeds
05.00 Airspace Advisory Committee Review (AAC) of Excess Land Transactions
06.00 Recordation of Director's Deeds
07.00 Cancellation of Sale Prior to CTC Approval
08.00 Cancellation of Sale Prior To Recordation
09.00 Correction Deeds

16.08.00.00 CREDIT SALES
01.00 General
02.00 Low- and Moderate-Income Housing
03.00 Credit Sale by Trust Deed
03.01 Escrow Requirement
03.02 Provisions of Trust Deed and Note
03.03 Processing of Director's Deed Sale With Trust Deed
03.04 Deposit of Director's Deed With Escrow Agent
03.05 Retention of Trust Deed and Note
03.06 Full Reconveyance Upon Payment
03.07 Partial Reconveyances, Subordinations, and Assumptions
03.08 Prepayments
03.09 Fire Insurance Coverage
03.10 Defaults
03.11 Acceleration Clause in Trust Deeds
03.12 Trust Deed Late Payment Penalties
04.00 Trustor Bankruptcy
05.00 Credit Check

16.09.00.00 RESCINDED ROUTE PROCEDURES
01.00 General
02.00 Phase I - Notice of Intention to Rescind
03.00 Phase II - Route Rescission
04.00 Federal Advanced Acquisition Fund (FAAF)
05.00 Local Real Estate Taxes
06.00 RAP Policy

16.10.00.00 SALES OF SURPLUS RESIDENTIAL PROPERTIES AND REPLACEMENT HOUSING
01.00 Sales of Surplus Residential Properties (SB 86-Roberti Bill)
02.00 Definitions
02.01 Offer
02.02 Affordable Price
02.03 Single-Family Residence
02.04 Surplus Residential Property
02.05 Displacement

02.06 Fair Market Value
02.07 Affordable Rent
02.08 Area Median Income
02.09 Persons and Families of Low or Moderate Income
02.10 Lower Income Households
03.00 Procedures
03.01 Disposal of Surplus Land and Improvements
03.02 Payment of Transfer Costs
03.03 Unlawful Tenants
04.00 Sales of Single-Family Residences - Priorities
05.00 Sales to Former Owners Still in Occupancy
06.00 Sales to Eligible Present Occupants (Tenants)
06.01 Eligibility Determination
06.02 Income Certification
06.03 Income Verification
06.04 Affordable Sales Price Calculations
06.05 Financing
06.06 Repairs
06.07 Agreement for Purchase of Real Property
06.08 Resale Controls
06.09 Required Documents
06.10 Lender-Required Appraisals
06.11 Property Taxes After Sale
06.12 Check List
07.00 Sales to Housing-Related Private and Public Entities
08.00 Requests for Proposals
08.01 Review and Selection of Proposals
08.02 Financing
08.03 Agreement for the Purchase of Real Property
09.00 Resale Controls - Sale to Housing Entity
09.01 File Maintenance
09.02 Annual Review of Properties Sold to Housing Entities
09.03 Determination of Noncompliance
09.04 Overhead Costs
10.00 Submittal to CTC
11.00 Sales at Fair Market Value
11.01 Sales to Present Occupants
11.02 Sales to Non-Occupant Purchasers Who Will Become Owner Occupants
12.00 Administration of Resale Controls After Sale to Present Occupants
12.01 File Maintenance
12.02 Annual Review of Properties Sold Subject to a Right to Purchase Agreement
13.00 Response to Requests and Inquiries
14.00 Notice Of Intent To Sell, Transfer, or Assign
15.00 Determination of Noncompliance
16.00 Notice of Default or Notice of Sale
17.00 Damaged Property
18.00 Replacement Housing

16.11.00.00 PORTER BILL PARK LEASES

01.00 General
02.00 Determination of Qualifying Parcels
03.00 Local Agency Notification
04.00 Request for Consideration of Lease
05.00 Fair Market Value Requirement
06.00 District Investigation
07.00 Criteria
08.00 District Process
09.00 CTC Determination
10.00 Lease Negotiations
11.00 Lease Execution
12.00 Compliance
13.00 Lease Provisions
14.00 Appraisal Requirement

16.12.00.00 STATUTES

01.00 General
02.00 CEQA Guidelines 15312 (14-CCR 15312)
03.00 Government Code
04.00 Health and Safety Code
05.00 Public Resources Code
06.00 Streets and Highways Code

16.00.00.00 - EXCESS LAND

16.01.00.00 GENERAL

16.01.01.00 Function and Responsibility

The Excess Land function is responsible for administering the inventory and disposition of Department-owned real property that is no longer required for rights of way or other operational purposes.

District and Region Excess Land staff have full delegation to operate and approve within the parameters outlined herein, and as shown in the matrix in R/W Manual Section 2.05.00.00. Any activities outside the scope of this Manual and/or the delegation matrix shall be subject to approval by HQ R/W. Such approval may be conveyed either in writing or by electronic means. A copy of said approval shall be placed in each Excess Land parcel file to which it applies.

16.01.02.00 Creation of Excess Land

Excess land may be created in several ways. Landlocked or uneconomic remnants not required for the right of way may have been acquired. Downscoped projects, superseded highway segments, route rescissions, route unadoptions by legislative action, and lands decertified at the request of adjoining owners may also create excess. Properties no longer required for operating purposes, such as maintenance facilities or material and disposal sites, may be declared excess.

16.01.03.00 Definitions

16.01.03.01 Excess Land

Excess land is real property, title to which is vested in the State of California, Department of Transportation, and which is determined and certified to be not required for rights of way or other operational purposes of the Department. The requirements for rights of way are established by the certificate of sufficiency contained in the appraisal report. Requirements for real property for other operational purposes are established and authorized by approval of specific Project Reports.

Excess land does not include:

- Airspace under or over State highways
- Hydrocarbon, mineral, or water rights
- Personal property
- Operating material and disposal sites

16.01.03.02 Inventory Parcel

An inventory parcel is excess land that is carried on the accounting inventory as an asset. Each inventory parcel has a VTA, Value at the Time of Acquisition. Inventory parcels are all excess land, as defined above, except those parcels specifically defined as non-inventory. Inventory parcels include land decertified at the request of adjoining owners.

16.01.03.03 Non-Inventory Parcel

A non-inventory parcel is excess land the Department intends to convey to a specific entity under the terms of a written agreement, and decertified access rights. These parcels are not part of the Accounting Service Center (ASC) inventory and do not have a VTA.

Examples of non-inventory parcels of excess land include:

- Property rights to be conveyed pursuant to an executed utility agreement for facility relocations.
- Property specifically acquired for another agency under terms of a written agreement.
- All decertified access rights where no other property rights are involved.
- Property rights, including underlying fee in local streets, to be conveyed to a local agency under terms of a freeway and/or cooperative agreement.
- Parcels acquired for exchange pursuant to a written agreement.
- Parcels acquired for replenishment housing facilities.

- Parcels acquired for functional replacement (see Section 8.30.00.00).

16.01.03.04 Planning Parcel

A planning parcel is a parcel identified only for planning purposes. It represents unacquired or undeclared excess land which may or may not eventually become excess. These parcels are not part of the ASC system.

16.01.03.05 Disposal Unit

A disposal unit is the number given to the property for disposal purposes. It may consist of one or more parcels. When parcels are grouped for disposal, the lowest parcel number becomes the disposal unit number. Multiple parcel disposal units may be split or combined (along the original parcel lines ONLY) at the discretion of the Excess Land Manager to optimize marketability or disposal potential as necessary.

16.01.03.06 Inventory Value (VTA)

Inventory Value (VTA) is the fair market value of the excess at the time of acquisition, considered as a separate parcel. The inventory value may not exceed the pro rata cost of the parcel.

16.01.03.07 Acquisition Price (Pro Rata Cost)

The amount paid by State for the excess parcel at the time of original acquisition.

16.01.03.08 Direct Conveyance of Easements

This category is limited to the State's conveyance of easements to public utility companies and political subdivisions, special districts, etc., or by direct sale where grantee has the power of eminent domain.

16.01.03.09 Direct Conveyance Pursuant to Cooperative Agreement

Pertains to the State's conveyance of property acquired pursuant to an agreement under which the public body and the State agree to jointly share in the acquisition and construction of an improvement jointly benefiting the State and the public body, with the fee or easement title to be conveyed to the public body for their future maintenance of the facility.

16.01.03.10 Direct Fee Sale to Government Agencies

Used when excess fee-owned property is sold to public entities without calling for competitive bids for consideration equal to the appraised fair market value of the property (CTC Resolution G-2).

16.01.03.11 Direct Sale to Eligible Present Occupants

Direct sale, either at fair market value to present occupants (tenants) who meet the eligibility requirements under CTC Resolution G-2 (as amended), or at less than fair market value (i.e., at an affordable price), to present occupants subject to Government Code Section 54235 - see Section 16.10.00.00 (CTC Resolution Nos. G-66, G-70, and G-72).

16.01.03.12 Direct Sale to Former Owners

Direct sales, at fair market value, to former owners who have remained in occupancy (CTC Resolution G-2).

16.01.03.13 Direct Sale to Housing Entity

Direct sale, at less than fair market value (i.e., at a reasonable price), to a housing entity that will use the property for low- and moderate-income housing purposes pursuant to Government Code Sections 54235, et seq. - see Section 16.10.00.00 (CTC Resolution G-80).

16.01.03.14 Exchange per Contract

Authorized by S&H Code Section 118, whereby excess land is conveyed to a party from whom the State is acquiring right of way and by using the value of the excess land as whole or part consideration for the required property or interest needed for State highway purposes.

16.01.03.15 Finding "A" Sales

Direct sale to adjoining owner, without calling for competitive bids, of small, odd-shaped, fee-owned parcels incapable of independent development and having a higher and better use as part of the adjoining property or, if sold to other than the adjoining owner, would cause an undue or unfair hardship to such adjoining owner in the normal development or operation of their property (CTC Resolution G-2 - as amended).

16.01.03.16 Finding "B" Sales

The sale of such excess parcels to other than the adjoining owner would deprive such adjoining owner of vested right of access to a public highway and would create a possible cause for action against the Department (CTC Resolution G-2 - as amended).

16.01.03.17 Miscellaneous Conveyances

Pertains to the sale of State's interests (such as access rights, mineral rights, or easements outside of the operating right of way) no longer required for operation of the highway facility.

16.01.03.18 Appraised Value

An estimate of the highest price the property will bring under the market conditions to which it is exposed as supported by a written staff or independent fee appraisal report.

16.01.03.19 Nominal Value Appraisals

Parcels with a value of $15,000 or less are designated as having a nominal value.

16.01.03.20 Public Sale Estimate (PSE)

An abbreviated report that estimates the fair market value of the parcel for the purpose of a public auction.

16.01.03.21 Private Sale

When property is sold by sealed bid after Notices of Sale have been mailed only to adjoining owners due to the peculiar size, shape, or landlocked condition of the property which precludes its independent development.

16.01.03.22 Public Sale

Public sales are by voice auction,sealed bid, or continuous bid after Notices of Sale are mailed to prospective purchasers.

16.01.04.00 Organization

The DDC-R/W shall establish a District Excess Land Unit, hereinafter referred to as Excess Land, to efficiently and expeditiously dispose of excess land and improvements thereon in accordance with S&H Code Section 118.6. Responsibilities for all parcels in the Excess Land Inventory shall be properly assigned to ensure disposal in accordance with the principles outlined herein. HQ R/W will evaluate the effectiveness of the Excess Land Unit through periodic reviews and audits of district procedures.

In accordance with community planning and environmental values, sound business practice, integrity, and State law, Excess Land will:

- Minimize the number of parcels on the Excess Land Inventory.
- Minimize the holding period from date of acquisition to date of disposal.
- Maximize the return from sale of the land or interest conveyed.

16.01.05.00 Review of Appraisal Maps

Subject to final approval of the District Director (DD), Excess Land is responsible for reviewing and approving the location of right of way lines to assure that fragmentary remainders are minimized. Right of Way approval is required prior to:

- Issuance of any appraisal map that contains excess land.
- Revision of any appraisal map that affects or creates excess land.

The appraisal certification should contain documentation of the review of appraisal maps for minimizing excess.

Excess Land reviews all initial right of way requirements and any design changes in accordance with criteria in the table entitled "Review Criteria" on the following page.

Excess Land coordinates with Airspace to identify potential excess that should be included in the right of way for airspace use. Airspace reviews initial

right of way requirements and design changes that create excess land adjacent to or within interchanges or adjacent to viaduct sections for potential airspace uses.

REVIEW CRITERIA		
Type of Parcel	**Action**	**Considerations**
Meets the minimum standards of local zoning ordinances, or may be granted zoning variances, and is capable of independent development.	Should not be incorporated in the right of way at the time of appraisal map review.	In evaluating potential for independent development, consider such factors as topography, size, shape, and access as well as zoning requirements.
Not capable of independent development but may be plotted to adjoining ownerships with reasonable expectation of enhancement to the adjoining property.	Should not be incorporated in the right of way at the time of appraisal map review.	In evaluating enhancement, consider the extent to which existing improvements and development on the receiving property would have to be rearranged to make suitable use of the plotted excess parcel. Also consider the potential for rezoning and redevelopment and the interest of adjoining property owners in purchasing such excess parcels.
Not capable of independent development and not considered to have potential for reasonable enhancement to adjoining properties if plotted.	Should be incorporated in the right of way.	Consider the costs of maintenance and weed abatement and the aesthetic effect on both the community and the highway if the parcel is not incorporated and subsequently determined to be unsalable.

16.01.06.00 Map Review Prior to Plans, Specifications, and Estimates (PS&E)

A second review of maps is required prior to submission of PS&E to Headquarters if the projectinvolves purchase of right of way or the creation of excess land. Parcels not originally incorporated into the right of way and parcels offered for sale with unsatisfactory results should be reconsidered for incorporation. At the conclusion of the review, Excess Land includes a statement in the PS&E submittal that it has completed a review of the contract plans and maps.

16.01.07.00 Parcel File

Excess Land maintains a file on every parcel in the Excess Land Inventory until final disposition is completed, including full reconveyance. The parcel file shall contain as a minimum the items listed in Exhibit 16-EX-23.

16.01.08.00 Parcel Diary

A parcel diary sheet is required for each disposal unit. The diary is maintained in sufficient detail to document the steps taken towards ultimate disposal of the property. It is part of the Excess Land parcel file and includes the following information as a minimum:

- **Name of Assigned Agent**
- **Signed and Dated Entries -** documenting verbal and written inquiries, review dates and suggested actions, personal contacts regarding

design studies and proposed routes, and personal contacts involving sales attempts.

- **Public Sales -** dates and results.
- **Other -** any information necessary to understand the handling of the disposal unit.

The diary and/or file shall contain documentation that prior to public sale "FOR SALE" sign(s) were posted on the property, advertisements were placed in newspaper(s), notices of sale were sent to appropriate governmental agencies, and copies of brochures were mailed to all owners adjoining the property being sold.

16.01.09.00 Excess Land Parcel Acquisition/Disposal Summary (Form RW 16-1)

An Excess Land Parcel Acquisition/Disposal Summary (RW 16-1) is prepared and maintained for each individual parcel of excess land and retained in the Excess Land parcel file during the Department's ownership.

Districts are to provide a copy of the RW 16-1 to ASC after recordation of the Director's Deed. The RW 16-1 notifies ASC to remove the VTA from the ASC inventory.

16.01.10.00 Excess Land Inventory Memorandum (Form RW 16-28)

Excess Land prepares Form RW 16-28 and sends it to ASC to record the VTA. This form is also used to make changes to the VTA. VTA additions or expenditure adjustments are due to actions district staff takes to create, adjust, return, incorporate, or delete excess parcels.

16.01.11.00 Excess Land Fiscal Transmittal (Form RW 16-29)

Excess Land prepares Form RW 16-29 to document fiscal transmittals to ASC:

- **Cashiering Unit** - funds received from a buyer in connection with sale of excess land, decertification deposit, or miscellaneous fees.
- **Accounts Receivable Unit** - request regarding related adjustments, such as refunds or forfeiture of deposits.

16.01.12.00 Discriminatory Rezoning

Excess Land investigates and monitors local agency master plan and zoning proposals that affect the Department's excess property and property held for future construction. Notification of a planning action may be by direct correspondence from the local agency or by formal notice in a newspaper of general circulation pursuant to Government Code Sections 65854 and 65856. Although formal notices are usually required, Section 65858 provides local agencies with authority to adopt certain interim zoning ordinances as urgency measures without the above notice requirements.

Excess Land shall notify the Legal Service Center when it appears a loss in value will result from a proposed planning or zoning action affecting the Department's property. Legal and Right of Way jointly evaluate the proposed action as promptly as practicable to allow an appropriate departmental response.

The DDC-R/W shall notify the DD immediately of any proposed master plan or rezoning activity that is unreasonable, would discriminate against the Department, or would reduce the value of the property.

Active opposition to discriminatory planning and rezoning activity is the Department's standard policy. Active opposition includes appearing at public hearings to present arguments and consulting with local agency staff. Opposition should not include efforts amounting to political pressure on individuals involved in the local planning process.

The CTC is concerned about this subject. The district may ask HQ R/W to request assistance from the Airspace Advisory Committee and the CTC.

Legal shall initiate action unless the DD decides that it is not in the best interest of the Department to oppose a local agency's planning or rezoning activity. The DD shall document by memorandum the reasons for not contesting the local agency's proposed action and forward a copy of the memorandum to the Deputy Director Project Development.

Excess Land should notify HQ R/W if Legal's opposition is unsuccessful. HQ R/W will refer the matter to the Director to determine whether the case warrants filing a lawsuit against the local agency.

16.01.13.00 Initiating Zoning Upgrades of Excess Land

Agency Action Request approved April 16, 1997 allows the district, with prior approval from HQ Right of Way, to initiate zoning upgrades of excess land.

The district may consider hiring consultants to obtain zoning upgrades and entitlements for excess property in limited cases. The district must prepare a marketing analysis demonstrating the benefits clearly exceed the risks and costs. The analysis is retained in the district and a copy must be forwarded to HQ Right of Way. HQ approval of the analysis is not required.

The district may ask HQ Right of Way to request that the Airspace Advisory Committee (AAC) provide advisory assistance to the district in developing the plan.

16.02.00.00 - EXCESS LAND INVENTORY

16.02.01.00 Inventory

Excess Land maintains records in the Excess Land Management System (ELMS) of all parcels defined as "excess land," inventory and noninventory. There are three independent records of excess land that constitute the official inventories:

- **Accounting Records -** General ledger accounts maintained by the Accounting Service Center (ASC). ASC records do not include noninventory parcels.
- **Right of Way Record Maps -** maintained by Right of Way Engineering.
- **Excess Land Parcel Files -** maintained by Right of Way.

Each record serves a separate purpose; together they provide a comprehensive record of accountability that facilitates management and disposition of excess land. The respective functions independently input data to the inventory from the three basic records. The three records must be kept current and the Right of Way Record Maps and Excess Land Parcel files (see Section 16.02.06.00) must be reconciled.

On federal-aid projects, all excess land files and documents, including maps, Inventory Disposal Records, correspondence, options, leases, notices, contracts, and agreements, shall carry the federal-aid project number for federal vouchering purposes.

ELMS is used to record, monitor, reconcile, and report the status of the excess land inventory. The ELMS User's Handbook for use of this system is available in the district or from HQ R/W on request. All parcels in the ELMS are carried in “disposal units” consisting of one or more parcels. Multiple parcel disposal units may be split or combined (along original acquisition parcel lines ONLY) at the discretion of the Excess Land Manager to optimize the marketability or disposal potential as necessary. Each parcel has an inventory or noninventory category. Disposal units may be comprised of both inventory and noninventory parcels.

16.02.02.00 Inventory Categories

The inventory categories are as follows:

1 - Disposable Category
- 1A - Available for immediate sale

2 - Hold Category
- 2A - Engineering Hold
- 2B - Public Agency Hold
- 2C - Administrative/Legal Hold
- 2D - Environmental Hold

3 - Entry Category
- 3 - New excess land pending immediate clearance or pending hold category assignment.

16.02.03.00 Inventory Process and Control

New excess parcels are placed in Category 3 pending clearance and transfer to another category. (See 16.03.00.00 for clearance procedures). Parcels can remain in Category 3 no longer than 90 days and are automatically classified as 1A (available for sale) at 90 days.

Parcels in Category 1A should be disposed of as soon as possible. In accordance with Streets & Highways Code Section 118.6, property must be offered for sale within 12 months from the time it is determined to be surplus. Parcels in Category 1A that do not have clearances, valuations, and/or maps and deeds are NOT available for immediate sale, and should be transferred immediately to the appropriate hold category. Authority to transfer excess from 1A to a hold category requires specified approvals by the district Real Property Retention Review Committee (RPRRC).

16.02.04.00 RPRRC and Transmittal of Hold Requests

The DD appoints the RPRRC to evaluate properties to be retained. The committee meets at least annually, or more frequently as required.

At least two weeks prior to the RPRRC meeting, Excess Land staff transmits requests for approvals to hold excess land to RPRRC with:

- Map of the property.
- Signed Form RW 16-3.

- Any other data that could facilitate review.

Upon request, the RPRRC Chair can extend a hold up to 12 months by entering the extension date on the current RW 16-3 and initialing and dating the form.

New holds required before a scheduled meeting shall be placed in the appropriate hold category with approval of the RPRRC Chair. The "release date" on the RW 16-3 will be the meeting date plus one month.

Excess Land staff is responsible for updating entries into the ELMS upon approval of hold requests.

Headquarters staff is responsible for reviewing ELMS reports and periodically auditing district files of RW 16-3 forms to assure procedures and approvals are correctly being followed.

See the "Inventory Matrix" on the following pages for additional information.

16.02.05.00 Inventory Value - Value at Time of Acquisition (VTA)

Inventory value is the fair market value at the time of acquisition of the excess considered as a separate parcel. The inventory value may not exceed the acquisition cost (pro rata cost) of the excess parcel.

ASC practice requires carrying the VTA as the parcel value on inventory; it is the lower of cost or market value at the time of acquisition.

An arbitrary VTA of $1.00 may be used in the following situations:

- The Department acquired title to the excess by donation or legislative enactment.
- The value at the time of acquisition cannot be determined or estimated (e.g., lost records).
- The actual cost is less than $1.00.

16.02.05.01 Items Not Included in VTA

The following items are not included in the VTA even though they may be part of the Department's capital cost of acquisition:

- Cost of easements (see Section 16.03.07.00 for special treatment of easements).
- Cost of personal property since these are inventory items in the property management files.
- Damage payments on partial acquisition parcels.
- Relocation assistance payments.
- Demolition costs incurred in the removal of improvements.

INVENTORY VALUES

Type of Parcel	Value
Regular Excess Parcels Acquired Through Acquisition	The VTA from the "Federal Participation Memorandum" (Form ASCRW 8-16) or from Form RW 7-13 in the acquisition appraisal.
Rescinded Route Parcels	The cost of acquisition shown in the MOS including, if applicable, the credit received for exchanged parcels. If credits to the acquisition cost are made, adjust the VTA to reflect these credits after preparing an Analysis of Cost with Adjustments to Inventory Value, Form RW 16-2, for inclusion in the Excess Land parcel file.
Excess Created by Design Change or Adjoining Owner Request	Established by Excess Land as if the parcels were regular excess. (Examples include decertifications, revisions, and downscoped projects.)
Former Maintenance Stations and Material or Disposal Sites	The value of the property at the time of acquisition. Adjustments, if any, are made in accordance with ASC procedures.

INVENTORY MATRIX

CATEGORY		DESCRIPTION	PROCESS
1 - Disposable	1A	Parcels Available for Immediate Sale - placed in Category 1A and disposed of as soon as possible. Parcels in Category 1A that do not have clearances, valuations, and/or maps and deeds are NOT available for immediate sale, and should be transferred immediately to the appropriate hold category. Authority to transfer excess to any other category requires approvals as described in Section 16.02.04.00.	Dispose of in accordance with guidelines set forth in Section 16.05.00.00. Handle improved properties occupied by former owner or on rescinded routes in accordance with CTC Resolution G-2 and Government Code Sections 54235, 54237, and 54238.6. (See Section 16.10.01.00.)
2 - Hold	2A	Parcels held at the specific request of an engineering branch for possible additional right of way requirement or mitigation purposes: • On the same project for which the parcel was acquired. • For possible additional right of way requirement for another project. • Parcels required for operational purposes, for example: – To provide the contractor with improved access to a construction site. – For a batch plant site or similar use. – For parking space for trailers to be used by engineering personnel (vacant land only). – For temporary detours. – For temporary material/disposal sites	Each application must contain the STIP year and number and the PSR approval date. In addition, each application must specifically identify the planned use for the property and the date by which the parcel will be transferred to the project or released. A parcel map must be attached to each application. Hold approval subject to the review process in Section 16.02.04.00.

INVENTORY MATRIX

CATEGORY		DESCRIPTION	PROCESS
2 - Hold (Cont.)	2B	Parcels Held for Sale to a Public Agency - parcels shall not be held for a public agency unless an official authorized to bind the agency to buy the land submits a written, signed request within 60 days after the property is offered. With RPRRC's approval, the property may be held up to a maximum of one year after receipt of the written request and deposit. This allows the agency time to arrange financing. The request must contain: • Property description or map. • The public purpose to which the land will be put. • The agency's intent to buy the property. • The date the sale will be concluded and reason for delay, if any. Authority for direct sales to public agencies is contained in Government Code Section 54220, et seq.; State Constitution, Article XIX, Section 9; S&H Code Sections 104.15 and 118.6; and CTC Resolution No. G-2.	Coastal Zone Property (Section 9, Article XIX State Constitution): Order maps and legal descriptions if not previously requested. Other: Order maps, deeds, and appraisals if not previously requested. Offer property at market value after appraisal approved and give 60 days to respond. If official written acceptance not received within 60 days, transfer to Category 1A and sell.
	2C	Parcels Held for Administrative or Legal reasons - examples are: • Clearances, valuations, maps/deeds not completed. • Relocation assistance or replenishment housing purposes. • Pending resolution of potential claims against the Department. • Judicial or legislative actions. • Routes that are candidates for rescission or downscoping. • Written instructions to hold received from CTC, the Director, or the HQ R/W Program Manager. • Parcels held for optimum return or for exchange. Examples include: – Other acquisition of adjacent land will provide access or make salable unit, – Access will not be available until construction is completed, – Exchange for needed right of way requested by Acquisition.	Document holds by written communication from the appropriate department including the reason for the hold and the release date. Hold approval subject to the review process in Section 16.02.04.00. Document economic justification where optimum return claimed as basis for hold. Document hold request for exchange with a memo from Acquisition justifying the hold.
	2D	Parcel held for environmental compliance or for mitigation purposes.	Document reasons for the hold.

INVENTORY MATRIX

CATEGORY		DESCRIPTION	PROCESS
3 - Entry	3	Temporary Hold for Clearance - place new parcels in this category pending clearance and transfer to another category. Parcels cannot remain in this category longer than 90 days. The ELMS will automatically place Category 3 disposal units in 1A after 90 days. To subsequently transfer from 1A to a hold category, follow the approval process in Section 16.02 04.00.	Upon entry, immediately obtain internal functional clearances; e.g., • Relocation Assistance • Property Management • Park and Ride • Utilities • Environmental • Maintenance • Project Development • Planning Obtain clearances from other governmental agencies, where appropriate: • Department of General Services • Division of Aeronautics • OPR and HCD • Departments of Parks and Recreation, Fish and Game, and the Wildlife Conservation Board and the State Coastal Conservancy • Local agencies Select disposal method, where possible. Select category. Obtain approvals for holds, where appropriate. Request maps, deeds, appraisals, etc. Transfer to appropriate category within 90 days whether clearances have been obtained or not.

16.02.05.02 Adjustments to VTA

Adjustments to the VTA may be required in the following situations:

- Improvements have been sold or removed.
- A portion of the property has been sold as excess land.
- The cost includes prepaid bond assessments and refunds have been received.
- Portions of the property have been encumbered with public roads under cooperative agreement or encroachment permits in anticipation of the proposed project.
- The property has been encumbered with utility easements.
- The property has been encumbered with private easements for access or other purposes.

16.02.06.00 Annual Inventory Review

The State Administrative Manual Section 8652 requires that a physical inventory be conducted at least once every three years for all parcels with a VTA over $5,000. This inventory is to assure that records are accurate and that all parcels have had a field review.

A district "Excess Land Record Review Team" to review records should consist of one member from Right of Way Engineering/Land Surveys, and one from Excess Land. The "Excess Land Field Review Team" to review parcels in the field may have the same members, or at the option of the district, consist of one member from Property Management and one from Excess Land.

The teams must determine that right of way record maps, excess land inventory, and excess land sales files depict ownership of the same land. See the table entitled "Review Process."

The Excess Land member is the team leader and is responsible for ensuring that:

- An annual review is completed to assure covering the entire inventory within a three-year period;
- All discrepancies are identified and brought to the attention of Right of Way district management for resolution.

The team members are responsible for reviewing the inventory, files, record maps, and parcels in the field. The team members shall sign a verification statement confirming that the review was completed according to this section.

The review is based on current fiscal year data. The Excess Land member assures that the annual review is done by June 30, and that a report of the results is completed no later than July 31 of the same year. A computer-generated "Right of Way Inventory Review Worksheet (RWM 834-A)" is available to assist in both record reviews and field reviews.

REVIEW PROCESS		
Step No.	**Action**	**Description**
1	Selection	Select sufficient excess land annually to allow a review of the total inventory within a three-year period. The RWM 834-A, organized by route and post mile, should be used to compare the Right of Way Record Maps and Excess Land Parcel files. . Depending on the size of the inventory, a 100% review may be feasible in one annual review. In this instance, the next review would not be due for three years, unless a significant number of parcels are added in the intervening years.
2	Review of Records	The following records must be reviewed for each parcel selected. Each should contain the listed minimum information: <u>Right of Way Record Maps</u>: • The total excess parcel delineated. • The excess parcel identified by a ten-digit number. • The area of the excess shown, either on the map proper or in the property box. <u>Excess Land Parcel Files</u>: • A copy of a map denoting the excess. • Form RW 16-1, "Excess Land Parcel Acquisition/Disposal Summary." <u>Excess Land Inventory</u>: A ten-digit parcel number must appear on the RWM 834-A..
3	Comparison	Compare the three sets of records: • Record Maps - find a corresponding number on the inventory and an excess land parcel file for each parcel. • Excess Land Files - find a corresponding number on the inventory and identification of the parcel on the record maps for each parcel . • Identify any discrepancies found between the records and note them on the RWM 834-A. Minor discrepancies in area should be corrected by R/W Engineering prior to disposing of the parcel. A major discrepancy may require a field review by the Records Review Team.

REVIEW PROCESS		
Step No.	**Action**	**Description**
4	Physical Inventory	The Field Review Team conducts a field review of parcels. Selection should be by route for optimum results per travel day. The same RWM 834-A used for the record review should also be used for the field review. Field reviews determine whether the parcel: • Requires any weed abatement; • Is littered or is becoming a dump site; • Has no obvious presence of hazardous waste. • Appears to be unsafe; • Has any encroachments or unauthorized occupants; and • Appears to be the same size and configuration as shown on record maps. Note any problems found on the RWM 834-A. Photos can be useful for documentation purposes.
5	Documentation	The RWM 834-A serves as the working papers. It shall include: • Names of team members. List Records Review Team and Field Review Team members separately as necessary. • Signed team verification and dates of inspection. • Date next review is required. • • List of elements checked and identification of discrepancies in the records. • • Identification of deficiencies in physical condition.

REVIEW PROCESS		
Step No.	**Action**	**Description**
6	Report	The report summarizes by county, route, and post-mile limits: • How many parcels were reviewed; • How many parcels were in compliance; • How many parcels were not in compliance; • Any discrepancies found among the two record sources, such as area differences, are noted on the RWM 834-A. Major discrepancies will need to be researched and corrected as part of a follow-up process; • Deficiencies in the physical condition of the parcels are noted on the RWM 834-A; • A follow-up plan and schedule to correct any deficiencies is noted on the RWM 834-A. The Team Leader prepares the report for review by the Excess Land Manager. The final report is sent to the DDC-R/W, with informational copies to the HQ offices for R/W Engineering, Property Management, and Excess Land.
7	Corrections	The districts are responsible for correcting the discrepancies, errors, and deficiencies.
8	Certification	HQ R/W will send a certification letter to the Chief of the Cashiering, Assets, and Special Funds Branch of the ASC annually, as of August 1. This letter summarizes the results for all districts and: • Certifies that the annual review has been completed and complies with the State Administrative Manual Requirements; • Gives the date of the next annual review required to meet the three-year total inventory review requirement; and • States that the report and working papers are on file in the district for any subsequent audit review.

NOTES:

16.03.00.00 - CLEARANCE PROCEDURES

16.03.01.00 Various Functional Reviews

Excess Land establishes clearance procedures to assure that the property is not required for a definite use by other units in the Department. The various functional units are consulted, including:

- **Acquisition** - to determine if the excess is needed for exchange.
- **Relocation Assistance** - to determine if an eligible relocatee is in possession of an improved property or if the property can be used by a displacee.
- **Property Management** (Rentals and Clearance) - to determine whether a State tenant occupies the property. If a property will be sold subject to a tenancy, no State property shall be removed without full knowledge of its removal being given to prospective purchasers. If the State is leasing or renting the property to be sold, Property Management attaches a copy of the lease or rental agreement to the clearance document.
- **Utilities** - to determine if the excess parcels are needed for utility purposes.
- **Park and Ride -** to determine if the excess is suitable for use as a Park and Ride lot. Selected and approved parcels are incorporated into the right of way for the Park and Ride project.
- **Environmental** - to determine if the excess has potential for use as a mitigation site, either for projects currently being developed or for mitigation banking purposes. The District Environmental Branch will determine which parcels are suitable for such use. These parcels will be transferred to Category 2D.
- **Planning** - to determine if the excess is required by any planning project.
- **Project Development** - to determine if the excess is needed for a project.
- **Maintenance** - to determine if the excess is needed for maintenance purposes.

16.03.02.00 Environmental Compliance

Excess properties are analyzed prior to disposal to determine if they are categorically exempt from the requirements of the California Environmental Quality Act (CEQA). Environmental and Excess Land jointly determine the CEQA requirements for excess land sales. CEQA requirements for surplus government property are contained in Class 12, CEQA Guidelines 15312. (See Section 16.12.02.00.)

Excess Land should initiate environmental compliance procedures as soon as it knows property may become excess. Although most parcels can be cleared in less than 30 days, the process may require several months if an environmental document is required.

See the table entitled "Environmental Compliance Process" on the following page for additional information on environmental clearance.

ENVIRONMENTAL COMPLIANCE PROCESS		
	Excess Land	**Environmental**
All Excess	Circulates all excess parcels through Environmental for completion of a preliminary survey.	• Conducts preliminary survey to identify any factors that may disqualify the proposed sales from being categorically exempt.
Categorically Exempt	Retains the Categorical Exemption Determination Form in the Excess Land file. Assesses the real estate market to determine an appropriate time frame for disposal that avoids significant disruption of the market. Careful planning is required to assure the disposal program avoids adverse cumulative effects. The sale of property that is categorically exempt shall not be delayed because other parcels in the area may not be exempt. The Sales Notice to Bidders should clearly state that sale of the excess is exempt from CEQA, but that future development or alteration of the property may be subject to CEQA and other environmental permit processes. (See Section 16.05.04.00.)	Notifies Excess Land promptly upon determination that a parcel is categorically exempt and completes a Categorical Exemption Determination Form.
Not Categorically Exempt	Offers properties with notable environmental value to other governmental agencies, pursuant to S&H Code Section 118.6, at their current appraised fair market value. Transfer of such properties normally does not require an environmental document if the existing use of the property is expected to remain the same. Properties that require an environmental document are not advertised for sale or sold until the environmental document is completed and the Notice of Determination (NOD) is filed and the 30-day legal challenge period has expired. The Sales Notice shall state whether an ND or EIR was prepared.	Prepares an environmental document, Negative Declaration (ND) or Environmental Impact Report (EIR), as appropriate, if governmental agencies are unwilling or unable to purchase the properties within a reasonable time. Prepares and files the NOD with the Office of Planning and Research.

16.03.03.00 Hazardous Substances

Excess parcels may not be offered for sale until the District Hazardous Substances Coordinator has provided a Hazardous Substances Disclosure Document allowing sale of the parcel. The disclosure document will certify one of the following three conditions:

1. The parcel is clear of hazardous substances and may be offered for sale; or

2. That hazardous substances exist on the property but the property may be offered for sale with appropriate and full information disclosure regarding the nature and extent of the contamination; or

3. That hazardous substances exist/may exist on the property and further investigation or remediation is required, and the disclosure document is an attachment to an Excess Land Hold Request.

   The Hold Request must show the Project Manager an estimated schedule for the investigation or remediation. The responsible unit for the investigation or remediation will normally be the unit that controlled or maintained the property (e.g. Facilities, Maintenance, Traffic Operations).

16.03.03.01 Lead-Based-Paint Disclosure

For properties constructed prior to 1978, Excess Land must disclose the possible exposure to lead-based paints. See Excess Land Reference File 96-06 for procedures, forms, and requirements.

16.03.04.00 Notices to Other State Agencies

Notification to other State agencies of the proposed sale of excess land is required as shown on the table entitled "Notice Requirements for Other State Agencies" on the following pages.

Offers of direct sale to federal agencies may be made at the discretion of the Excess Land Manager based on knowledge of interest by a federal agency or physical proximity to a federal facility.

16.03.05.00 Offers to Local Public Agencies and State Resources Agency

Before any excess real property, except surplus residential property as defined in Government Code Section 54236, (see Section 16.10.00.00), is offered for sale to the public, it must be offered for sale or lease to local public agencies, housing authorities, or redevelopment agencies within whose jurisdiction the property is located. (See Streets & Highways Code Section 118(a)(2).)

Excess Land must send Offers to Sell or Lease Surplus Land, Exhibit 16-EX-4, as shown below on the table entitled "Requirements for Offering to Local Public Agencies." The important elements of the offer are shown on the table entitled "Elements of Offer."

Other than the offers as required by statute for low/moderate income housing or park/recreational use, offers of direct sale to local public agencies are at the discretion of the Excess Land Manager.

REQUIREMENTS FOR OFFERING TO LOCAL PUBLIC AGENCIES

Purpose	Sent to	Remarks
Developing low- and moderate-income housing	Any local public agencies including, but not limited to, housing authorities or redevelopment agencies within whose jurisdiction the surplus land is located.	With respect to any offer to purchase or lease, priority shall be given to offers for development of the land to provide affordable housing for lower income elderly or disabled persons or households, and other lower income households.
Park and recreational or open-space	• Any park or recreation department of any city within which the land is situated. • Any park or recreation department of the county within which the land is situated. • Any regional park authority having jurisdiction within the area in which the land is situated. • The State Resources Agency or any agency that may succeed to its powers.	
Enterprise zone	Nonprofit neighborhood enterprise association corporation if the surplus is within such jurisdiction.	Pursuant to Government Code Section 7073. (See Section 16.12.03.00.)
Designated program area	Program area agent.	As defined in subdivision (i) of Government Code Section 7082. (See Section 16.12.03.00.)
School purposes	Public school districts whose jurisdiction is involved.	Pursuant to Government Code Section 54222.

NOTICE REQUIREMENTS FOR OTHER STATE AGENCIES			
State Agency	**Description of Property**	**Process**	**Minimum Information Required**
Department of General Services Real Estate Services Division Attn. Real Estate Sales Section 400 R Street, Suite 5000 Sacramento, CA 95814	• Any parcel, regardless of size, that abuts property owned by another branch of State government • Any parcel, one acre or larger in size, that has access to a public road • Any parcel, regardless of size, that in the district's opinion may be of value or use to another State agency	Send a letter to DGS. (See Exhibit 16-EX-2.) If a response is not received within the 60 days, dispose of the property in the normal manner.	• General location or vicinity map • Detailed parcel map showing local roads and streets and any adjoining property owned or controlled by any branch of State government • Appraised value, if available, or a statement that a fair market value appraisal will be made if there is an affirmative response
Department of Transportation Aeronautics Program P.O. Box 942873 Sacramento, CA 95273-0001	Any parcel within a two-mile radius of any public airport.	Send a notice to Aeronautics. (See Exhibit 16-EX-2.) Aeronautics notifies the appropriate Airport Director of the availability of properties. The notification prescribes a 60-day response time and specifies the name and phone number of a contact person. During the prescribed 60-day period, the Airport Director should notify the district directly of their needs for the parcel. If a response is not received within the 60 days, dispose of the property in the normal manner.	• Present zoning • Highest and best use • Topography • Improvements, if any • Encumbrances or copy of State's policy of title insurance • Other remarks as appropriate, e.g., access, utilities available
Housing and Community Development (HCD) 1800 Third Street Sacramento, CA 95814	Parcels that local public agencies have not expressed interest in purchasing but that may have unique affordable housing potential, as determined by HCD in isolated cases.	Send copies to HCD of all offers of property to local public agencies in accordance with statutory requirements outlined in Section 16.03.05.00. HCD notifies Caltrans within the prescribed 60-day period on a case-by-case basis and requests that the parcel be withheld from immediate sale for a specific time.	Copy of the offer to the local public agency.

NOTICE REQUIREMENTS FOR OTHER STATE AGENCIES			
State Agency	**Description of Property**	**Process**	**Minimum Information Required**
• Department of Parks and Recreation P.O. Box 942896 Sacramento, CA 95814 • Department of Fish and Game 1416 Ninth St., 12th Floor Sacramento, CA 95814 • Wildlife Conservation Board 801 K Street, Suite 806 Sacramento, CA 95814 • State Coastal Conservancy 1330 Broadway, Suite 1100 Oakland, CA 94612-2530	Excess parcels that meet the requirements of Section 9, Article XIX, State Constitution • Coastal Zone land as defined in Section 9 • Lands within 1000 yards of any property that has been listed on, or determined by the State Office of Historic Preservation to be eligible for, the National Register of Historic Places • Lands within the Lake Tahoe region as defined in Government Code Section 66905.5	Notify the listed State agencies. Any proposed sale of such land requires authorization by the Legislature. If the agencies do not respond within 60 days, dispose of the property in the normal manner. Notification requirements do NOT apply to "exempt surplus land." To be considered exempt, the surplus land must be sold to an owner of contiguous land and must meet one of the following criteria: 1. Less than 5,000 square feet in area. 2. Less than the minimum legal residential building lot size for the local jurisdiction or 5,000 square feet in area, whichever is less. 3. Has no record access; is less than 10,000 square feet in area; is not contiguous to land owned by a State or local public agency that is used for park, recreational, open-space or low- and moderate-income housing purposes; and is not located within an enterprise zone pursuant to Government Code Section 7073 nor a designated program area as defined in Government Code Section 7082. (See Section 16.12.03.00.)	• Parcel number • Area • Location • Acquisition cost • Overhead to acquire the property

ELEMENTS OF OFFER	
Element	**Explanation**
Leasing Property To Be Sold at Fair Market Value	Any direct sale pursuant to Government Code Sections 54220 et seq. must be at current fair market value. The Department may only lease surplus real property pending the sale or exchange of such property (see S&H Code Section 118.6). The lease rate must be high enough to ensure that the eventual sales price of the parcel, when sold subject to the lease, is no less than the fair market value of the property if sold unencumbered by such lease.
Notification of Intent To Purchase or Lease Surplus Land	The entity desiring to purchase or lease surplus land must notify the Department in writing of its intent within 60 days after receipt of the Offer to Sell or Lease Surplus Land.
Resales of Land for Development of Low- and Moderate-Income Housing	A local public agency, housing authority, or redevelopment agency that purchases land from the Department may reconvey the land to a nonprofit or for-profit housing developer for development of low- and moderate-income housing as authorized by law.
Payment Period	Government Code Section 54225 allows the Department to provide for a payment period of up to 20 years in any contract of sale or sale by trust deed for: • Surplus land to be used for park, recreation, open-space, or school purposes. • Improved surplus land to be used for low- and moderat--income housing purposes. S&H Code Section 118 allows the Department to provide a longer payment period of up to 40 years in any contract of sale or sale by trust deed for improved and unimproved surplus land to be used for low- and moderate-income housing purposes.
Multiple Offers	If the Department receives offers to purchase or lease from more than one eligible entity, first priority shall be given to the entity that agrees to use the site for housing for persons and families of low- or moderate-income. By exception, first priority shall be given to an entity that agrees to use the site for park or recreational purposes if the land being offered is already being used and will continue to be used for park or recreational purposes, or if the land is designated for park and recreational use in the local general plan and will be developed for that purpose.

The preferred disposition for these properties is a direct sale, and when notice is received from two or more public agencies, preference shall be given to an agency that proposes to purchase the property.

When a notice is received from any entity desiring to purchase or lease surplus land, the district prepares:

- **Appraisal** - of the fair market value if sold.
- **Lease rate** - if the property is to be leased pending sale or exchange.

After completion of an appraisal or lease rate determination, the district and the entity negotiate to determine mutually satisfactory sales or lease terms (sales price must be based on the fair market value appraisal). If the price or terms cannot be agreed upon after 60 days, Excess Land may dispose of the surplus land.

16.03.06.00 Outdoor Advertising Signs

Excess Land must assure that the Department has no obligation for outdoor advertising signs located on excess property that continues beyond the sale of such property. Excess Land determines whether or not a sign is located on the property prior to sale by:

- Reviewing the appraisal and acquisition documents.
- Clearing the property for sale through Property Management.
- Visually inspecting the property.

To determine the status of any existing signs, Excess Land sends a Request for Information on Signs,Exhibit 7-EX-11 to HQ R/W, Outdoor Advertising Unit, and proceeds as shown on the table on the following page after receiving a response.

If previously-sold excess property involves outdoor advertising signs where the Department retains a contractual obligation to ultimately pay when said signs are removed, Excess Land should review the situation in detail and coordinate with the Outdoor Advertising unit for clearance.

16.03.07.00 Clearance of Other Items

Excess Land should ensure that a parcel is not conveyed until it determines the State has no unfilled contractual obligations to convey easements or other rights for utility or other purposes over the property. If any such unfulfilled obligations exist, appropriate exceptions or reservations shall be included in the Director's Deed. Such items should be brought to the attention of prospective purchasers in the Sales Notice.

Procedures for clearance of other items are shown in the table entitled "Procedures for Clearance of Other Items."

OUTDOOR ADVERTISING SIGN OBLIGATIONS		
Sign Status	**No Executed R/W Contract and Quitclaim Deed**	**Executed R/W Contract & Quitclaim Deed Covering Sign Relocation/Removal**
Illegal Sign - Sign that was illegally placed on State highway right of way and one that does not have a current State Outdoor Advertising Permit.	Notify sign owner to remove the sign. Removal must be accomplished prior to sale of the property.	If sign owner refuses to remove sign, Clearance and Demolition has sign removed and bills owner for cost.
Nonconforming Sign - Sign was lawfully placed but does not conform to current law.	Have the sign removed as a right of way obligation prior to sale of the excess property.	Have sign owner execute an Advertising Structure Agreement and a rescinded Right of Way Contract. Consult with Legal about filing an action to rescind the existing contract if sign owner refuses to execute an agreement and/or a rescinded contract. As an alternative to expedite sale of the excess property, order sign owner to remove the sign. The Department shall pay the amount set forth in the existing Right of Way Contract.
Old Advertising Structure Agreement • Nonconforming Signs - Sign occupies property under an old agreement with a termination clause but no reference to highway construction.	Sell the property subject to the sign interest.	
• Conforming Signs -Sign conforms to current law. Occupies property under an old agreement with ambiguous termination clauses, e.g., one clause provides termination by 30-day notice; another ties removal of sign to future highway construction.	Property Management has sign owner execute a new Advertising Structure Agreement prior to sale. Consult with Legal on the next appropriate action if sign owner refuses to execute a new agreement.	

PROCEDURES FOR CLEARANCE OF OTHER ITEMS	
Item	**Procedure**
Fee Conveyances Prior to Easement Conveyance Over Same Parcel	Where the State has easements that cross excess land that have not yet been conveyed to a third party pursuant to a contractual obligation, it is permissible to include the clause below in the fee Director's Deed of the affected excess parcels. The clause is to be used only when a Director's Deed easement across excess has not been recorded and posted on the Right of Way Record Maps at the time the Director's Deed for conveyance of the excess is prepared. When the easement deed is recorded and posted prior to preparation of the Director's Deed for conveyance of the fee excess, the Director's Deed of fee will make no mention of the easement except for the clause printed on the Director's Deed form that states "...subject to special assessments, if any, restrictions, reservations and easements of record." "Subject to an easement granted or to be granted to (name of company) for (purpose of easement) and incidents thereto upon, over and across: (Description of easement area)." It is essential that the "name of company," "purpose of easement," and "description of easement" are identical in the Director's Deed for the easement and the Director's Deed for the excess fee. Under normal circumstances, property or other rights acquired expressly pursuant to a contractual obligation or easements being conveyed over excess lands are not part of the Excess Land Inventory.
Easements No Longer Needed for Transportation Purposes	Easements no longer required for transportation purposes may either be vacated or sold pursuant to S&H Code Section 118.6, depending on the circumstances. The DDC-R/W determines the method of disposal after considering the facts. Although easements are normally vacated, they can be appraised and disposed of in the normal manner where circumstances warrant, such as when easements are acquired for a transportation use but are never used. When easements are no longer needed, they are added to the ELMS. The decision on whether they are classified as inventory or non-inventory is based on definitions contained in the user's handbook.
Superseded Fee-Owned Right of Way	When title to a superseded right of way is owned in fee, it may be conveyed to a private owner only by Director's Deed. Salable segments of such right of way may be used in exchange the same as any other fee-owned property.
Excess Property That Has a History of Soil Instability	The clause below is included in all Director's Deeds, Sales Contracts, and Sales Notices used in the disposal of excess properties that have a history of soil instability caused in part or entirely by State highway construction. "It is mutually agreed and understood that this property may be subject to soil instability and that the grantees, for themselves and their successors or assigns, hereby waive any and all claims for damages resulting from further earth movement or soil instability which may occur because of prior actions by the State of California, its officers, agents and employees."

PROCEDURES FOR CLEARANCE OF OTHER ITEMS	
Item	**Procedure**
Parcel Contractual Obligation Review	All excess land resulting from partial acquisitions is subject to a contractual obligation review prior to sale. Evidence of a completed contractual obligation review is first noted in the Parcel Diary and then in the property description portion of Form RW 16-1 at the time the resume package is submitted for CTC approval by the following statement: "A parcel review has been completed and there are no contractual obligations". If contractual obligations are found, their disposition must be explained in full.
Flood Hazard Notice	The following notice is placed in all Sales Notices when there is a potential for flood hazards: "CAUTION: We are hereby putting you on notice that this property may be subject to potential flood hazards. The Department of Transportation does not assume any liability for any damage which may be caused by such flood hazards. We recommend that you fully investigate the potentiality of such hazards with the appropriate Federal, State and local agencies."
Excess Property Located in Fault Hazard Zones	Section 2621.9 of the Public Resources Code (See Section 16.12.04.00) requires any person who is a seller or acting as an agent for a seller of real property located within a "delineated special studies zone" to disclose to any prospective purchaser of such property the fact that it is located within such a zone. To ensure the Department complies with all statutory requirements, the following statement is added to all contracts and agreements and to all Sales Notices used to notify prospective purchasers of the Department's intent to dispose of real property located within a special studies zone: "The real property which is the subject of this sale may be situated within a Special Studies Zone as so designated under the Alquist-Priolo Special Studies Zones Act Sections 2621-2625, inclusive, of the California Public Resources Code. As such, approval of any future construction or development of any structures for human occupancy on this property may be subject to the findings contained in a geologic report prepared by a geologist registered in the State of California. No representations on this subject are made by the Department of Transportation, and any prospective purchasers should make their own inquiry or investigation into the potential effects of this Act on this Property." The California Division of Mines and Geology's Special Publication No. 42 contains an index to individual quadrangle maps that can be used to determine if excess property is located in a Fault Hazard Zone.

NOTES:

16.04.00.00 - EXCESS LAND APPRAISAL

16.04.01.00 General

The appraisal or value estimate is the basis on which property is sold, and no property may be disposed of until valuation is completed. Excess land valuations shall conform to guidelines set forth in the Appraisal Chapter.

An appraisal is required for utility easements to be located on excess land, except where providing the easement is the State's obligation pursuant to a contractual obligation or S&H Code Section 702 or 703, or if the right of way was acquired pursuant to S&H Code Section 83 with the utility already there.

16.04.02.00 Public Sale Estimates (PSE)

Either a market value appraisal or a public sale estimate, as defined in the Appraisal Chapter, is sufficient for determining minimum bids when excess land is offered at public sale. Generally, the least intensive report shall be prepared where the proposed sale method is by public sale.

At the discretion of the DDC-R/W, an Agent assigned to either Appraisals or Excess Land may prepare public sale estimates. Value conclusions are reviewed and approved by a Senior Right of Way Agent assigned to Appraisals. Alternately, a Senior Right of Way Agent assigned to Excess Lands may review and approve appraisals where the value conclusion is $15,000 or less, and Public Sales Estimates where the estimated value is $500,000 or less. Consideration, however, should always be given to having complex and/or controversial valuations prepared by the Appraisal unit regardless of value. Annual reviews are not required for appraisals and public sale estimates used in connection with public sales.

16.04.03.00 Market Value Appraisals

A market value appraisal is required for all direct sales of excess land. This includes the valuation of leases, easements, and fee parcels to be conveyed to local agencies as outlined in Section 16.03.05.00. Fair market value appraisals cannot be prepared by any member of the Excess Land staff, except for "nominal" value appraisals.

Excess parcels valued for direct sale to private parties at $500,000 or more require dual appraisals as outlined in the Appraisal Chapter. Parcels conveyed to another State agency by a Transfer of Control and Possession Agreement are excluded from the dual appraisal requirement. Since the process for securing an independent report may be time consuming, Excess Land should identify those parcels requiring two appraisals sufficiently in advance of proposed sale dates to enable hiring fee appraisers.

Approval of a market value appraisal for a direct sale is assumed to be valid for one year from the date of the appraisal unless Excess Land determines that a significant change in value during the year requires a review by Appraisals.

16.04.04.00 Nominal Value Appraisals

Excess Land Agents may prepare nominal value appraisals following the format and approval process described in Sections 7.14.01.00 and 7.14.04.01.B of the Appraisal Chapter.

The Certificate of Appraiser statements should state:

"I understand I may be assigned as the Excess Lands sales agent for one or more parcels contained in this appraisal report, but this has not affected my professional judgment nor influenced my opinion of value."

Although a yearly review is not required, Excess Land may request a review of nominal parcels any time one is warranted.

NOTES:

16.05.00.00 - DISPOSAL METHODS AND PROCEDURES

16.05.01.00 General

Excess property shall be disposed of as soon as possible commensurate with sound business practices, statutes, and CTC Resolution G-2 (as amended), so the number of parcels on inventory is maintained at minimum levels.

Property is not to be withheld from sale without full justification, including economic, environmental, and community considerations. Parcels shall be offered for sale within one year of becoming available for sale, pursuant to Streets & Highways Code Section 118.6. All efforts made to sell the property shall be documented in the file, and all offers are input into the ELMS.

16.05.02.00 Methods of Disposal

Excess real property can be disposed of as follows:

- **Internal transfers**
- **Public sale** - by auction, sealed bid, or continuous bid
- **Direct sale** - to adjoining owner (Findings A and B), to former owners in occupancy, and to eligible present occupants
- **Private sale** - between adjoining owners
- **Exchange** - by Right of Way Contract
- **Functional Replacement** - by agreement (see Section 8.30.00.00)
- **Other direct conveyances:**
  To other governmental agencies
  Pursuant to utilities agreement
  Pursuant to cooperative agreement
  Pursuant to legislation
- **Leasing** - pursuant to S&H Code Section 104.15
- **Lease-Purchase**
- **Transfer of Control and Possession** - to other State agencies
- **Private Brokers**

All conveyances of excess property are subject to the CTC's final approval, except where statutory or delegated authority vests with the Director. (See also Section 16.07.01.00.) Incorporations of property within State highway operating rights of way are at the discretion of the DDs.

All sales of inventory property valued at $1 million or more, whether by direct sale or public sale, are subject to Airspace Advisory Committee (AAC) review prior to submittal to the CTC. (See also Section 16.07.05.00.)

All printed matter, including the terms of sale, must clearly state that the sale is subject to Department approval, AAC review (if required), and CTC approval, and is not binding upon the State prior to such approval.

16.05.03.00 Internal Transfers

16.05.03.01 Incorporation of Excess Parcels Within Operating Right of Way

Excess Land initiates appraisal map reviews, as set forth in Sections 16.01.04.00 and 16.01.05.00, to eliminate small remnants of excess land that can be included within the right of way. Examples include:

- **Park and Ride** - If any excess land is selected for a possible Park and Ride lot, a feasibility study should be undertaken comparing the economics of using the excess land to purchasing alternate sites. The study includes an analysis of the savings resulting from fewer cars on the road because of the facility. A determination is made of the lot size necessary for the particular location and the estimated time necessary to complete a project report.
- **Enhancement of Air Space** - Excess land situated adjacent to air space may be incorporated into the right of way to enhance utility of the air space. The file must be documented with an economic justification.
- **Unsalable Excess Parcels** - Consideration should be given to incorporating small unsalable parcels into the right of way.

Once the location and size of a possible Park and Ride lot are determined, Excess Land holds the area necessary for the lot for the time needed to process a project report, normally less than six months. Any remaining excess should be released and processed for sale as soon as possible. Special consideration should be given to the sale of any remaining excess. Particular attention should be given to access and economic enhancement since the Park and Ride site will be deleted if the project report is not approved.

Excess land is not to be transferred into the right of way until a project report for the Park and Ride facility is approved.

The Ridesharing Coordinator is responsible for working with Excess Land to determine the best site available for the cost. The project report discusses use of alternate sites and includes reasons for using the excess land.

16.05.03.02 Inter-Program Transfers

Excess property may be transferred within the Department to another program, such as Maintenance or Administration. An accounting transaction transfers the property at its VTA to the appropriate program. Excess Land initiates the transfer by completing RW 16-1 and RW 16-28 with the required supporting data and submitting them to ASC.

16.05.03.03 Charging Excess Land to Projects

The following rules apply to projects on which construction has not been completed:

- If there is no Federal participation in the project cost, the amount to be charged to the project is the VTA.

- If a non-Federally participating excess parcel or portion thereof was acquired on a Federally participating project and it will be included in the right of way for the same or any other Federally participating project, the amount to be charged to the project receiving the excess land is the prorata cost of the parcel if the parcel is approved in an E-76 covering the original project. Where FHWA approval has not been obtained (i.e., no E-76), the project should be charged the VTA.

- If an excess parcel acquired on a nonparticipating project will be included in the right of way for a participating project, it is not eligible for Federal participation. This is because it was acquired before Federal approval of the project for which it is used.

- If fragmentary excess land will be incorporated in the right of way of completed projects with a closed EA, the amount charged is the VTA.

Charges to EAs on active projects for incorporation of parcels require the EA to be adequately funded to receive the charges. Charges exceeding $10,000 could surpass the programmed amounts for any given project. Charges should not be made until it has been verified that the project can adequately receive the amount to be charged, or until a program supplement has been approved.

16.05.04.00 Public Sales

16.05.04.01 General

Excess Land shall develop sales procedures to attract the widest possible market and to obtain the maximum return. The sales standards described in R/W Manual Section 16.05.04.08 and 16.05.04.14 are the minimum necessary to ensure adequate exposure of public sale property.

16.05.04.02 Purchase Agreement (RW 16-5 and RW 16-6)

Generally if an excess parcel is capable of independent development compatible with its environment, it should be disposed of by public sale. Public sale may be by oral auction, sealed bids, or continuous bid, whichever provides the greatest return. Bids that fall below the published minimum shall be rejected. If no bids are received, the minimum is reanalyzed before the property is again offered for sale.

The right to purchase is awarded to the highest responsive bidder. If the highest bidder defaults, consideration should be given to awarding the right to purchase to the second highest bidder at the second high bid amount.

The right to purchase is for a definite period commencing on the first day after the date of sale. The usual right to purchase period is 60–90 days;

the maximum right to purchase period is 180 days. Extensions of the right to purchase period must be approved in accordance with the current Executive Order Delegation Matrix in Section 2.05.00.00, and a 1% per month penalty is assessed (NOT to be applied to the purchase price). Refer to Sections 16.05.13.00 and 16.05.14.00 for alternative sales methods utilizing an Option-Purchase Agreement or a Lease-Purchase Agreement.

The purchase deposit must be sufficient to cover out-of-pocket costs of the sale, e.g., printing and mailing the Sales Notice and advertising. The minimum deposit shall be:

Minimum Bid Amount:	Minimum Deposit Required:
Over $5,000	10% of minimum bid rounded down to the nearest $100
$500 to $5,000	$500
Under $500	Actual amount of bid

16.05.04.03 Default or Withdrawal of Highest Bidder

If the highest bidder fails to exercise the purchase rights within the prescribed period or fails to comply with the sale terms, the Region/District retains the deposit until damages and costs are determined. Damages and costs include but are not limited to staff time and overhead, costs associated with advertising and marketing the property again, and the reduction in the market value, if any, at a subsequent sale. See Section 16.07.07.00 for procedure when a bidder requests cancellation of a sale prior to CTC approval.

Upon default, Excess Land notifies the highest bidder that the deposit is being retained until damages are determined through subsequent resale of the property. The remainder of the deposit, if any, is refunded to the bidder. Excess Land has the implied responsibility to schedule another sale as soon as practicable. If Excess Land determines that it is in the best interests of the State not to schedule another sale attempt, the deposit (less appropriate costs) is to be refunded to the bidder immediately.

If the highest bidder defaults or withdraws from the sale pursuant to Section 16.07.06.00 prior to recordation of the deed, Excess Land may offer to award a right to purchase to the second highest bidder. If the second highest bidder accepts award, the deposit required and the terms of right to purchase are the same as stated in the Sales Notice. However, the right to purchase period shall commence on the first day following the date Excess Land receives written notice of acceptance by the second highest bidder.

16.05.04.04 Minimum Bids

The following guidelines apply to property available for public sale and property previously offered to public agencies in accordance with S&H Code Section 118.6.

- **First Offering** - As soon as possible after the property becomes available, offer it for sale within a range of 75-100% of PSE. The Excess Land Manager should consider the expected demand for the property, its shape and conformity of use with the neighborhood, and development potential when setting the minimum bid within the range.
- **Subsequent Offering** - If the property is not sold at first attempt, the Region/District shall prepare a marketing plan that outlines and substantiates the marketing effort and justifies the minimum bid for subsequent offerings. A copy of the marketing plan must be retained in the Region/District's excess land parcel file. If the marketing plan indicates a minimum bid below 75% of the PSE, the Region/District shall request a revised PSE.

  After receipt of the revised PSE, if Excess Land believes that a minimum bid between 60% and 75% of PSE is warranted, that decision will be fully documented by memorandum to the file, signed by a Supervising R/W Agent or above. Properties are not to be offered with minimum bids below 60% of PSE. This authority may not be delegated below the Supervising R/W Agent level.

- **Marketing Plan** - The Region/District must consider the following while preparing the marketing plan:
  - Reducing the minimum bid.
  - Using an unannounced minimum.
  - Reviewing appraisal/PSE for concepts that may be inappropriate and revising appraisal/PSE as necessary.
  - Combining with other parcels.
  - Reducing the number of parcels in the disposal unit.
  - Expanding advertising.
  - Using other innovative marketing techniques.
  - Alternate sales methods.
  - Holding the disposal unit until market conditions improve. (See Section 16.02.04.00 for Hold Request procedures.)

16.05.04.05 Unannounced Minimum Bid

Parcels may be auctioned with an unannounced minimum bid, in which case all the foregoing requirements apply, with the following additional conditions and exceptions:

- All other terms of the sale, including required deposit, are indicated in the Sales Notice with the word "unannounced" after the term "Minimum Bid." **NOTE:** Deposit amount should vary from the 10% standard in order to keep bidders from determining the minimum bid.

- The PSE and the unannounced minimum bid are confidential information and shall not, under any circumstances, be divulged to a prospective bidder or the general public. Excess Land is responsible for the actual amount of the minimum bid, which shall be established in writing by concurrence between the Excess Land Manager and his/her immediate supervisor). The minimum bid amount must be kept in a confidential and secure file. If the PSE or minimum bid is given to a prospective bidder, Excess Land shall cancel the sale and initiate a resale of the parcel using the PSE as the basis for the minimum acceptable bid.

- The Sales Notice shall include a provision allowing 10 days to evaluate the bids received. Excess Land has discretionary approval to accept any bid that exceeds 80% of the unannounced minimum acceptable bid. Otherwise HQ R/W approval is required prior to acceptance of the bid. Requests for acceptance will include the total number of bids, the bid amounts, and the Region/District's recommendation with reasons therefor.

- Bids accepted by Excess Land that are less than the unannounced minimum bid shall be justified by an Administrative Authorization memorandum signed by a Supervising R/W Agent. This authority may not be delegated.

- Unannounced minimum bids must be at least 75% of PSE.

16.05.04.06 Credit Term Agreement (RW 16-5)

The Credit Term Agreement provides that the purchaser has a prescribed number of days during the right to purchase period to open an escrow at purchaser's expense. Purchaser shall deposit a sum that equals 30% of the successful bid when added to the initial bid deposit. The total period for making final payment shall be no longer than the right to purchase period prescribed in the Sales Notice.

It may be in the Department's best interest to extend the right to purchase period if requested by the purchaser. Excess Land may extend the period as supported by a full analysis (to be retained in the Region/District files) on the following terms:

- A right to purchase extension charge of 1% per month on the bid amount is made for the period of the extension. If the transaction closes prior to the end of the extension period, Excess Land may prorate the extension charges allowing monies for the unexpired term of the right to purchase period to be credited to the purchase price or refunded.

- The extension charge is not applied to the purchase price.

- If the right to purchase is not exercised, neither the bid deposit nor the extension charge is refunded.

16.05.04.07 Notice of Surplus Real Estate Sale (RW 16-4)

A Notice of Surplus Real Estate Sale (Sales Notice) is used for properties sold by public auction, sealed bid, or continuous bid. Deviations from the standard terms and conditions require documentation and DDC-R/W approval. Innovation in preparing the front covers of these notices is encouraged, particularly for those properties having specialized uses or high values. The Sales Notice shall clearly state if credit terms are being offered, and, if so, all sales are subject to satisfactory proof of the buyer's creditworthiness. Credit reports will be obtained at buyer expense.

Accuracy about access, zoning, and availability of utilities is important when describing the characteristics of the property. Investigations regarding such factors should be thorough so the Sales Notice is reliable.

Copies of the Sales Notice shall be mailed or delivered to ASC, all adjoining owners, and all other persons who may be interested in purchasing the property. Emphasis should be on reaching those segments of the market that specialize in the particular class of property.

If a public sale is by sealed or continuous bid, the appropriate bid form shall be attached and mailed with the Sales Notice.

16.05.04.08 Posting of Property and Physical Inspection

Real estate type "For Sale" signs shall be placed on excess land offered for public sale and shall contain information about the parcel, the words "For Sale," and the address and phone number of the appropriate Region/District office. Signs should be of sufficient size and shape to be readily identifiable by the public and constructed of materials that will withstand the elements. Where high value or special purpose properties are for sale, consideration should be given to more extensive signing, or other types of display, to assure maximum exposure.

At the time of the appraisal and again upon posting, an Agent shall physically inspect the property to determine existence of any adverse interests, advertising signs, hazardous material/waste, persons in possession (trespassers or State's tenants), or easements. These interests shall be checked against the State's title policy and either cleared or brought to the attention of prospective bidders in the Sales Notice or during the auction.

Excess Land should check the property periodically during the advertising period to assure that "For Sale" signs are still posted.

16.05.04.09 Public Sales of Landlocked Parcels

Excess Land should undertake public sales of landlocked parcels of substantial area or value only after it has attempted to secure an access option from adjoining owners. Negotiations should be based on securing adequate rights commensurate with the highest and best use of the parcel.

The parcel diary should contain a notation that Excess Land reviewed the landlocked parcel with Design and no alternate means of access was or could be made available.

Resumé packages for sales of landlocked parcels must include a statement in the remarks section of the resumé form about attempts made to secure an access option. If an option is secured, a copy of the option agreement is included in the package.

Options to purchase access may only be obtained on a voluntary basis, and the following guides should be used in attempts to secure options:

- **Option Period** - Sufficient to allow grantee to exercise the option within the terms prescribed in the Sales Notice. Allow sufficient time to advertise and complete all aspects of the sale.
- **Option Value** - Appraisals shall certify that the price to be paid for the optioned property is reasonable and that the optioned rights are adequate to serve the excess land.
- **Consideration for Option** - Shall normally be $500.
- **Form of Agreement** - The option agreement follows the form shown in Exhibit 16-EX-5. (To be issued.)

16.05.04.10 Transfer Costs

The Department shall not pay fees for recording, escrow, title insurance, documentary stamp tax, or any other charges involved in the transfer of title to

excess property. This policy should be stated in the Sales Notice and brought to the attention of prospective bidders.

16.05.04.11 Oil, Gas and Mineral Reservations

Excess Land shall avoid retention of oil, gas, and mineral rights at the time a fee-owned parcel is disposed of. In areas where active community oil and/or gas leases are in effect, the income or royalties therefrom are considered in the valuation of the excess property.

16.05.04.12 Delinquent Taxes

Excess Land shall investigate the status of taxes and assessments and report the status on Form RW 16-1 under "Fee Title" information section. Although property will generally not be subject to delinquent taxes, cancellation should be requested if they do exist. If property must be sold subject to delinquent taxes or assessments, this fact shall be brought to the attention of prospective bidders in the Sales Notice.

16.05.04.13 Mailing List

Excess Land in each Region/District shall maintain a comprehensive mailing list or file with names and addresses of persons and firms who are interested in purchasing State property. These lists must be reviewed and purged annually in accordance with Government Code Section 14911. (See Section 16.12.03.00.)

A separate, return-addressed verification card may be attached to the material mailed. The card should state that the mailing list is reviewed annually as required by State law. It should provide a space for the recipient to affix postage when returning the card as an indication of desire to remain on the mailing list.

Suggested text for the message side of the verification card:

"Your name is on our mailing list to receive notice and terms of sale for lands to be sold at public sale. If you wish to continue to receive these notices, please sign this card, place adequate postage on the reverse side, and mail immediately. If this card is not returned by (specify date), your name will be removed from our list. This notice is required annually by Government Code Section 14911. Please correct the address shown if incorrect; be sure to include zip code."

The mailing list is confidential and shall not be made available to the general public.

16.05.04.14 Advertising Excess Property - Public Sale

Since advertising is the key to successful sales of real property, Excess Land must be thoroughly familiar with advertising practices of the local and national real estate markets.

Prior to the sale, Excess Land must take the following actions as a minimum, and document them in the file:

- Send notifications to appropriate governmental agencies.
- Post "For Sale" sign on property.
- Place advertising in newspaper(s).
- Provide copy of Sales Notice to adjoining owners.

Use of advertising should be maximized with attention given to specialized publications, notices, or other information outlets (e.g., the Internet) for properties with special uses or characteristics. Format and placement of real estate advertisements, as well as cost, shall be in conformance with normal real estate transactions. Minimum advertising requirements are listed in the table below entitled "Minimum Advertising Requirements."

MINIMUM ADVERTISING REQUIREMENTS	
Minimum Bid	**Requirement**
Less than $5,000	Advertising is discretionary.
More than $5,000	Advertise in a newspaper of general circulation in the area in which the property is located.

MINIMUM ADVERTISING REQUIREMENTS	
Minimum Bid	**Requirement**
More than $50,000 or Special Purpose Properties	Advertise in newspapers of the major metropolitan areas of the state, as well as specialized real estate publications having regional or national distribution. The Public Information Officer shall be advised of all such sales for consideration of a news release.

Minimum content includes size, location, zoning, topography, other pertinent information, and date, time, and method of sale. In the case of public auctions, the location of the auction should be carefully specified. If sale is by sealed bid, the advertisement shall include date and time for receipt of bids and information on where bid proposal forms may be obtained. It should be made clear that bids must be made on the Department's bid forms. The address and telephone number of the office where additional information may be obtained should be included.

16.05.04.15 Conduct of Public Auction Sales

When excess property is sold by public auction, the auction shall be conducted by two Agents from Right of Way, one of whom shall act as the auctioneer. The auction may be held on the premises or at another location. Sufficient copies of the Sales Notice must be available for people attending the auction.

At the time of the auction, the auctioneer ascertains that everyone present has at least one copy of the Sales Notice and is familiar with the terms and conditions. The auctioneer should be prepared to provide any additional or special information that affects the property and to answer any questions from prospective bidders. Upon reading the breach of contract provisions and the minimum bid and deposit requirements, the auctioneer requalifies bidders, if practical, by asking for the showing of deposit/registration checks. The auctioneer then announces, "The bidding is now open."

The auctioneer shall assure that adequate time is allowed for bidding before closing the sale. A right to purchase shall be awarded to the highest responsive bidder.

One of the Agents secures all necessary signatures on the proposal. The highest bidder signs the original proposal sheet, showing address and telephone number. The Agent accepts the deposit/registration remittance by cashier's check or certified check and delivers a receipt and a duplicate proposal sheet to the high bidder. Personal checks are not acceptable. Cash deposits should be discouraged. The Agent transmits the monies to Accounting with a RW 16-29, which places the funds in the special deposit account.

The highest bidder must furnish the required deposit at the time of the auction as prescribed by the Sales Notice, otherwise the auctioneer may reopen the bidding and award the right to purchase to the second highest bidder. Alternatively, the sale may be canceled and rescheduled.

One of the Agents shall obtain the name, address, and telephone number of the second highest bidder to be used in the event the highest bidder defaults. (See R/W Manual Section 16.05.04.03 for procedures when the highest bidder defaults.)

16.05.04.16 Personal Checks

Excess Land may not accept personal checks.

16.05.04.17 Conduct of Sealed Bid Sales

When sales are by sealed bids, a representative of Right of Way opens the bids at the prescribed time and place in the presence of prospective purchasers. The representative tabulates all bids and announces the highest bidder.

Immediately after the bid opening, deposits shall be returned to the unsuccessful bidders. If an unsuccessful bidder is present when the deposits are released, the check may be hand delivered if a receipt is obtained.

See Section 16.05.04.03 for procedures when the highest bidder defaults.

The number of bids received shall be kept confidential prior to opening bids, and no additional bids shall be accepted after the bid submission deadline. Bidders may withdraw or revise their bids prior to the bid submission deadline.

16.05.04.18 Notification of Tenants

To meet statutory requirements and maintain good public relations, Excess Land should advise tenants of progress made toward the sale of the property they occupy. Written notification shall be sent as follows:

- Notify tenants on rescinded routes that they may have a right to purchase pursuant to CTC Resolution G-2 (as amended) or Government Code Section 54237 (see Section 16.10.00.00).

- Send a copy of the appropriate Sales Notice to each occupant so they can bid on purchasing the parcel, if they so desire.

- Immediately notify each occupant of the name, address, and phone number of the purchaser upon completion of the public sale. Notify each occupant if the parcel does not sell at the public sale.

- Notify each occupant of the specific date of the recording of the Director's Deed that divests the State of ownership of the particular property.

16.05.04.19 Sale of Excess Land and Improvements Leased as Resident Engineer's Offices

The procedures in this section apply to properties proposed to be leased back to the State as Resident Engineer's Offices after a sale subject to the lease.

The proposed lease is attached to a consent memorandum from Construction to Right of Way. Two copies of the proposed lease are made part of the Sales Notice and are executed by the State's purchaser at the time the purchase agreement is executed. Execution of the lease by the State is in accordance with the subdelegation matrix in R/W Manual Chapter 2, Policy.

After approval by the CTC of the Director's Deed, HQ R/W returns the deed to Excess Land for execution and recordation. These leases should not be recorded, but may be delivered to the escrow holder with the Director's Deed for recordation and delivery of the lease to the purchaser.

The property must be advertised and offered for sale within 90 days of the date of the consent memorandum. Rent payments to the purchaser commence on the date of recordation of the Director's Deed.

See RW 11-2 in the Property Management Chapter for the lease form to be used in these circumstances.

16.05.04.20 Public Sale of Fragmentary Remainders

Whether landlocked or not, fragmentary remainders of nominal value are normally sold under Finding A procedures. If the adjoining owners have refused to purchase the parcel, it may be sold at public sale after a public sale estimate has been obtained. A documented refusal must be obtained from all adjoining owners within a reasonable time prior to public sale of the parcel. It is not appropriate to spend inordinate amounts advertising these parcels.

16.05.04.21 Protection of Improvements on Excess Land Following Public Sale

It is the Department's policy to minimize losses resulting from vandalism of improvements located on excess property on which a sale has been awarded. The policy is considered satisfied if the improved property is occupied by tenant(s) under a Department rental agreement.

For sales of unoccupied improved excess parcels, Excess Land should include terms in the purchase agreement obligating the purchaser to execute an agreement that results in:

- Immediate possession of the property by the purchaser.

- Elimination of the Department's liability for claims for damage resulting from injury to any person or property.

- Cancellation on the date of expiration or extension of the sale period or recordation of the Director's Deed, as applicable.

- Return of possession of the property to the Department in the event of default in a condition equivalent to that which existed on the date the sale was awarded.

These provisions may be satisfied by minor modifications to a standard rental agreement, but the Department must receive a fair rental for the property for the specified use. Temporary access for one day or less may be given to purchasers to facilitate sale of the property. Property Management shall assist Excess Land in preparing the agreement and establishing a fair rental rate.

Property Management is responsible for notifying Excess Land immediately of the receipt or issuance of a 30-day termination notice involving tenants of improved excess property on which escrow is still open. Excess Land notifies the purchaser of the pending termination date of the tenancy. If the property will become vacant more than 15 days prior to the last day of the right to purchase period, the purchaser is requested to accept a Right of Entry. If the purchaser will not accept a Right of Entry, Excess Land should make all efforts to either expedite close of escrow or ensure security of the improvements. "No Trespassing" signs and periodic checks by local police, the California Highway Patrol, and Excess Land personnel may be necessary in high-risk areas.

Improvements that contribute a zero or negative value to the property may be removed prior to public sale of the parcel with proper documentation and a request to the Clearance Agent.

16.05.04.22 Change in Terms and Conditions of Sale Subsequent to Publication of Sales Notice

Occasionally it is necessary to alter the terms and conditions of sales after initial publication of the Sales Notice. Maintenance may request reservation of a slope easement; Right of Way may discover a zoning change. Or, some other significant change may occur that has a direct bearing on the price a purchaser may be willing to pay. If time permits, Excess Land should mail an addendum to the Sales Notice to all persons known to have received the original Notice. In addition, the State representative must announce the changes at the sealed bid opening or at the public auction. The highest bidder shall be required to execute a written statement of understanding that the sale is made subject to those specific terms and conditions, as well as the terms and conditions contained in the original Notice.

16.05.04.23 Eviction of Occupants of Excess Property

Excess land is normally sold subject to the occupancy of existing tenants since a Department-initiated eviction may create renewed RAP eligibility, unless the eviction is for cause. Relocation Assistance and Excess Land must agree to all proposed evictions of former eligible occupants. Evictions of former RAP eligibles should only take place where there is a clear economic advantage or other compelling reason.

The sale of occupied excess to another public entity for ultimate clearance and use may also create RAP eligibility. All sales agreements with other public agencies must contain a clause specifying that the purchasing agency assumes responsibility for relocation benefits that may accrue to existing occupants. If agreement cannot be reached, Excess Land should request a legal determination of liability before consummation of the sales agreement.

16.05.05.00 Direct Sale to Adjoining Owners, Finding A and B

Excess Land may sell small, odd-shaped, fee-owned, excess parcels directly to adjoining owners without calling for competitive bids under the provisions of CTC Resolution No. G-2, Exhibit 16-EX-6. Finding A and B parcels are defined as follows:

- **Finding A** - Direct sale to adjoining owner, without calling for competitive bids, of small, odd-shaped, fee-owned parcels incapable of independent development and having a higher and better use as part of the adjoining property or, if sold to other than the adjoining owner, would cause an undue or unfair hardship in the normal development or operation of such adjoining owner's property.

- **Finding B** - The sale of such excess parcels to other than the adjoining owner would deprive such adjoining owner of vested right of access to a public highway and would create a possible cause for action against the Department.

Upon making either a Finding A or B determination, Excess Land may sell the excess parcel to the adjoining owner. The minimum consideration shall be the appraised fair market value of the parcel considered as part of the adjoining property.

If the adjoining owner refuses to purchase the excess for such consideration, Excess Land may sell it by competitive bid at public auction. The Department shall retain title to the excess if sale to another party would deprive an adjoining owner of an existing vested right of access to a public highway (Finding B).

All offers of direct sales made to an adjoining owner are confirmed in writing. Any refusal to purchase at the offered price shall be documented and, if possible, signed by the adjoining owner.

16.05.05.01 Adjustment of Sales Price to Adjacent Owners

The DDC-R/W has the authority to approve Finding A and B sales when there is a difference between the proposed sales price and the approved market value appraisal. The DDC-R/W provides a memorandum of administrative authorization for the file, approving the sale, in the overall public interest for social, environmental, or economic purposes. The memorandum shall fully justify the sale and state the reasons, based on sound business judgment and in accordance with statute and policy, for selling the parcel for less than the approved market value appraisal. Such justification shall include an economic analysis of the cost of incorporating and maintaining a property or holding for future sale as opposed to selling for less than market value. Criteria based on specific or local conditions addressing social or environmental perspectives must be quantified economically to the greatest extent possible. Generally speaking, the greater the variance between the sale price and the appraised value, the more substantial the justification needs to be.

By federal law, sales of federally participating excess land at less than fair market value requires either prior FHWA approval OR federal reimbursement. Compliance with this section shall constitute compliance with FHWA regulations regarding prior approval.

All sales are subject to CTC approval, and Excess Land must fully justify and document the reasons for selling the parcel below the approved market value appraisal.

16.05.05.02 Payment of Recording Fees - Purchase Consideration $100 or Less

When the total consideration is $100 or less, Excess Land may pay recording fees in consideration of the savings in maintenance costs. The sales agreement must contractually obligate the Department to pay the recording fees.

16.05.05.03 Finding A and B Sales to Other Governmental Agencies

Finding A and B sales may be made to other governmental agencies in the same manner and under the same conditions that apply to privately-owned adjoining property.

Sales made to other governmental units for public road or street widening or extension purposes shall be treated as direct sales.

16.05.05.04 Informal Time Payment Sales, Finding A or B

CTC Resolution G-2 provides for an informal time payment plan for a period not to exceed 18 months when the adjoining owner is unable to pay the value of the subject property in one payment. When property is sold under this plan, no interest is charged and a letter form of agreement is satisfactory. The signed acceptance of the conditions shall be made on one copy of the letter to be retained in the parcel files.

This letter shall include:

- Description of the property or attached map.
- A statement that the purchaser is in fact an adjoining owner.

- A statement that the sale must be approved by the CTC.
- A statement about purchase price and monthly payments.
- A statement that the sale may be canceled if payments become delinquent, in which case the Department retains one month's installment and returns the balance to the adjoining owner.
- Provision that the purchaser will pay the recording fee.
- A statement about the vesting of the Director's Deeds.
- A statement about the Department's reservations, if any.
- A listing of any title encumbrances affecting the conveyed property.

Excess Land requests Director's Deeds and makes entries for removal of the parcel from the Excess Land Inventory after the adjoining owner executes the agreement (Exhibit 16-EX-7).

16.05.06.00 Direct Sale to Eligible Present Occupants

16.05.06.01 Direct Sale of Commercial Property Pursuant to S&H Code Section 118.1

Except as provided in S&H Code Section 118.6, Excess Land must first offer commercial property on rescinded routes to the State's tenant if the tenant has made improvements that are valued in excess of $5,000 and are consistent with the terms of the Rental Agreement. In the clearance procedure for excess land created by route rescission, Property Management identifies all improved excess commercial properties where the present tenant, at their own expense, has made authorized capital improvements valued in excess of $5,000.

Commercial property is defined as real property used for the production of income through the sale of products or services, and excludes agricultural, industrial, or residential uses. Typical commercial properties are banks, service establishments, restaurants, parking lots, retail stores, and office buildings.

Improvements must be capital improvements that add value to the real property. The term does not include expenditures for maintenance and repair. In addition:

- The value must be documented.
- The tenant must not have been reimbursed for improvements through rental offsets.
- The improvements were made consistent with terms of the Rental Agreement.

Excess Land must determine if the eligible tenant is interested in purchasing the property at current fair market value and must document the tenant's intention in the parcel file. When there is more than one eligible tenant, the opportunity to purchase at fair market value by direct sale must be offered to each tenant.

- If waivers can be obtained from the other tenants, the property may be offered to one tenant.
- If waivers cannot be obtained, tenants may purchase property jointly or Excess Land can offer the property at a private sale.

When an eligible tenant indicates a desire to purchase at a direct sale, Excess Land shall obtain two independent appraisals of fair market value from qualified staff or fee appraisers and offer the property at the approved appraised value. The Excess Land Transaction Resumé must contain a description of the improvements and must fully document the qualifying conditions set forth in the above definition of improvements.

If the eligible tenant refuses the offer to purchase at the approved appraised value, Excess Land should immediately schedule the parcel for public sale.

Excess Land should refer legal issues or questions that occur because of unusual circumstances to HQ R/W for reference to the Legal Service Center for resolution prior to committing the Department to a course of action.

16.05.06.02 Direct Sale to Present Residential Tenant-Occupant at Fair Market Value

CTC Resolution G-2 (as amended) (Exhibit 16-EX-6) authorizes the direct sale to present residential tenant occupants provided that:

- The purchase price shall be at fair market value, as supported by an approved appraisal prepared for such sale;
- The tenant is current in all rent obligations; and
- The tenant has been in occupancy as a tenant of the State for a minimum of five consecutive years.

Excess Land must determine whether an eligible residential tenant is interested in purchasing the property at fair market value, and must document the offer of direct sale and the tenant's intentions in the parcel file.

If an eligible residential tenant refuses the offer to purchase at the approved appraised value, Excess Land should immediately schedule the parcel for public sale.

16.05.07.00 Private Sale Among Adjoining Owners

Excess Land shall offer an excess parcel that qualifies under Finding A procedures for direct sale to more than one adjoining owner by private sale, sealed bid, or auction among all adjoining owners if:

- The parcel can be properly used by two or more adjoining owners, and the sale is consistent with normal land use and would not impose a hardship on any of the remaining adjoining owners.
- Written waivers cannot be obtained from all but one of the adjoining owners.

Waivers from adjoining owners are retained in the Excess Land files. Where written waivers cannot be obtained, certified letters to the adjoining owners confirming their noninterest will suffice.

The value of the excess land may differ depending upon which adjoining ownership it is considered a part of for appraisal purposes. In this case, the minimum bid is set at the lowest appraisal value as plottage to the owners who have expressed interest in bidding.

When a parcel is offered by private sale among adjoining owners, Excess Land shall send a Sales Notice to all adjoining owners by certified mail whether waivers have been obtained or not. The Notice sets forth the terms and conditions of sale and contains sales terms in the manner detailed in Section 16.05.04.00 for public sale parcels. Sale by sealed bid or auction is discretionary.

16.05.08.00 Exchange by Right of Way Contract

The Department is authorized by S&H Code Sections 104.1 and 104.2 to acquire lands in excess of its needs and to exchange the same for other property needed for State highway purposes. Information regarding exchange transactions is contained in the Appraisal and Acquisition Chapters. Appropriate documentation of exchange transactions is found in the table in R/W Manual Chapter 16.07.00.00 entitled "Excess Land Disposal File Documentation."

16.05.09.00 Other Direct Conveyances

16.05.09.01 Governmental Agencies

CTC Resolution G-2 governs direct conveyances of excess land to public agencies, including redevelopment agencies and Federal agencies. This does not apply to conveyance of fee-owned land to public agencies that:

- Qualify for direct sale under Finding A and B procedures.
- Qualify for direct conveyance pursuant to special legislation.

In negotiating with another public agency for direct sale, it is important for the agency to understand that the agreed sale price is subject to final approval by:

- **CTC** - if a Director's Deed is required.
- **Director** - if a Transfer of Control and Possession Agreement is required.

16.05.09.02 Direct Sales to Governmental Agencies

Direct sales to public agencies shall be for a public use, and generally at fair market value. The governing body of the public agency must provide a resolution that states the excess land will be used for public purposes. "Public purposes" means the preponderant area of the property shall be substantially for government, as opposed to proprietary, functions. The intended specific use of the property shall be stated in the resolution. A copy of the resolution shall be submitted with the resumé package to the CTC for approval.

For direct sales to public agencies at less than fair market value, Excess Land shall include a reversionary clause in the Director's Deed. The clause shall require substantial public use for a period of 15 years to control use and resale of the property consistent with the intent and language of the statute or other authority authorizing or mandating the direct sale. Refer to R/W Manual Engineering Chapter, Section 6.13.13.04, for approved clause. A direct sale to a redevelopment agency MAY be exempt from this section if the property is within the redevelopment agency's jurisdiction and identified in the redevelopment plan.

Proposed public sales at less than the approved market value appraisal shall be in accordance with R/W Manual Section 16.05.05.01.

The sales agreement with a governmental agency for the purchase of real property may be in the form of a one-year exclusive right to purchase. This requires a minimum 10% nonrefundable cash deposit that will be applied to the purchase price if the right to purchase is exercised.

If the agency wishes to extend the option, it must request the extension prior to expiration. The exclusive right may be extended for an additional one year provided:

- The appraisal is updated to reflect the current market value of the property and the sale price adjusted accordingly.
- The agency pays the Department an additional 10% nonrefundable deposit, also to be applied to the purchase price.

16.05.09.03 Conveyances to Utility Companies

Land acquired in the State's name for replacement of public utilities facilities pursuant to a Utilities Agreement is disposed of in accordance with the terms of the Agreement. The acquisition appraisal shall stand in lieu of the excess land appraisal.

Where the property was not acquired specifically for replacement purposes but by terms of the Utilities Agreement it is necessary to relocate a utility facility on excess land, an excess property appraisal shall be provided and the degree of title required by the Utilities Agreement shall be conveyed pursuant to terms of the specific agreement.

If the excess parcel is sold before the easement is conveyed to the utility company and the easement was acquired in the State's name, an easement shall be reserved to the State. The easement is subsequently conveyed to the utility company.

To avoid processing these items through the CTC, every effort should be made to acquire these replacement facilities easements directly in the name of the utility company involved. If possible, use the utility company's easement form.

If a utility was located in a public street or highway that was incorporated into a State highway pursuant to S&H Code Section 83, and the area occupied by the utility is subsequently declared excess, an easement should be reserved to the utility company in the Director's Deed conveying the excess.

16.05.09.04 Cooperative Agreements

Land acquired in the name of the State for use or partial use by another agency pursuant to a Cooperative Agreement is conveyed under the terms of the Agreement. The acquisition appraisal serves as the excess appraisal.

If the Agreement provides for conveyance of lands acquired for other purposes, an excess property appraisal shall be provided.

When the Agreement provides for conveyance of land or lesser interests for nonmonetary consideration (such as construction work to be

performed by the other agency or savings in future maintenance costs to the Department), the functional unit responsible for originating the Agreement must provide an evaluation of the benefits or savings accruing to the Department. This assures that the consideration being received is commensurate with the value of the property being conveyed.

16.05.09.05 Joint Exercise of Powers Agreement With Department of Parks and Recreation (Exhibit 16-EX-8)

Transfers made pursuant to the above agreement are subject to the Property Acquisition Law; they are transmitted pursuant to the procedures specified in Section 16.05.11.00.

16.05.10.00 Coastal Zone

Article XIX of the State Constitution, Section 9, requires the Department to offer excess land parcels in the Coastal Zone, as defined by Section 30103 of the Public Resources Code (see Section 16.12.04.00), to the following agencies and departments (see Section 16.03.04.00):

- Department of Parks and Recreation
- Department of Fish and Game
- Wildlife Conservation Board
- State Coastal Conservancy

These parcels may be transferred for a consideration at least equal to the Department's acquisition costs, including overhead. Any proposed sale requires authorization by the Legislature, and the acquiring agency is responsible for pursuing Legislative authorization.

16.05.11.00 Transfer of Control and Possession

All transfers are authorized by Government Code Section 14673. However, the Public Works Board must approve proposed payment to the Department of Transportation for transfers subject to the Property Acquisition Law (PAL), Government Code Sections 15850, et seq. It is the responsibility of the agency acquiring property to inform Caltrans if the transfer of excess land is subject to PAL.

Procedures for preparing and approving Transfer of Control and Possession Agreements are shown in the following two tables:

TRANSFERS NOT SUBJECT TO THE PROPERTY ACQUISITION LAW Government Code Section 14673	
Responsible Party	**Action**
Requesting State Agency	Responds within 60 days of Region/District's Notice of Intent to Sell Excess Land. Informs the Region/District of the following: 1. To transfer the excess parcel to them at fair market value and for a specified purpose. 2. The budget authority to pay for the excess parcel and that payment is NOT subject to the PAL. 3. Legislative authority if for less than fair market value.
Region/District	4. Prepares an appraisal, legal description, maps, and the Transfer Agreement, Exhibit 16-EX-15. 5. Requests ASC to prepare Accounts Receivable Bill (or credit to the appropriate land bank after the Transfer is recorded*) in the amount of the agreed purchase price.
Accounting Service Center	Provides Accounts Receivable Bill to Region/District.
Region/District	1. Has the Region/District Director or designee sign the original and one copy of Agreement. 2. Transmits agreements, maps, and the A/R Bill to the requesting agency for execution. 3. Retains a copy of the Agreement and A/R Bill for reference during processing.
Requesting Agency	Signs the original and one copy of Agreement and sends both along with maps to DGS for approval.
DGS, Real Estate Services Division	1. Reviews the transaction and has the Director of General Services approve and sign the original and one copy of the Agreement. 2. Returns one of the fully-executed Agreements to the Region/District for recording. 3. Retains the second signed Agreement for conforming recording reference on the Agreement and for the State Proprietary Index (SPI) and archives.
Region/District	4. Sends one copy of executed Agreement to HQ R/W. 5. Records the Transfer Agreement. 6. After recorded, sends original Transfer Agreement to requesting agency. 7. Sends a copy of the recorded Agreement to DGS. DGS can then conform recording reference on their original signed agreement. 8. Retains one copy of recorded Agreement in file. 9. Make entries in the ELMS according to Pages V-69 and V-70 of the ELMS Manual. 10. Forwards RW 16-1 to ASC to record transaction and remove parcel(s) from inventory. *If this is a credit to a land bank account, provide ASC a memo of explanation at this point.
HQ R/W	Enters the date the Agreement was approved by the Director of General Services in the CTC Approval field on the Disposal Unit Screen.

TRANSFERS SUBJECT TO THE PROPERTY ACQUISITION LAW Government Code Sections 15850, et seq., and 14673	
Responsible Party	**Action**
Requesting State Agency	Responds within 60 days of Region/District's Notice of Intent to Sell Excess Land. Informs the Region/District of the following: 1. To transfer the excess parcel to them at fair market value and for a specified purpose. 2. The budget authority to pay for the excess parcel and that payment is subject to the PAL. 3. Legislative authority if for less than fair market value. 4. Provides billing information to be sent to DGS.
Region/District	Prepares an appraisal, legal description, and maps, and sends copies of each to DGS, Real Estate Services Division (RESD) using RESD's Form Std. 29, Exhibit 16-EX-25.
DGS, Real Estate Services Division	Reviews the appraisal and maps and uses the legal description to prepare the Transfer Agreement. Returns the original and one copy of the Agreement to the Region/District.
Region/District	Requests ASC to prepare Accounts Receivable Bill in triplicate in the amount of the agreed purchase price.
Accounting Service Center	Provides Accounts Receivable Bill to Region/District.
Region/District	1. Has the Region/District Director sign the original and one copy of the Agreement and transmits both signed Agreements, together with A/R Bill, to the requesting agency for execution. 2. Retains a copy of the Agreement and A/R Bill for reference during processing.
Requesting State Agency	Signs the Agreement and transmits original and one signed copy of Agreement to DGS for approval. Signs the original and one copy of Agreement and sends both to DGS for presentation to the State Public Works Board for approval.
Public Works Board	Approves payment for the Agreement.
DGS, Real Estate Services Division	1. Records the original Agreement (if required). 2. Sends the original recorded copy to the requesting agency. 3. Conforms recording reference on the second signed copy and retains for the SPI and archives. 4. Sends a copy of the recorded Agreement to Region/District. 5. Distributes other copies as required.
Region/District	6. Sends one copy of recorded Agreement to HQ R/W. 7. Makes entries in the ELMS according to Pages V-69 and V-70 of the ELMS Manual. 8. Forwards RW 16-1 to ASC to record transaction and remove parcel(s) from inventory.
HQ R/W	Enters the date the Agreement was approved by the Director of General Services in the CTC Approval field on the Disposal Unit Screen.

16.05.12.00 Requests to Decertify and Purchase

An adjoining owner or public agency may request the Department to decertify a portion of operating right of way, sell, or otherwise convey access or other property rights not considered as excess land. Excess Land shall not initiate any action until the requesting party has deposited, as a minimum amount, the estimated costs of processing the request, including appropriate overhead assessments. Accounting for the overhead should be done pursuant to procedures set forth in the Accounting Manual. Project Development reviews requests for decertification, and obtains approval from FHWA where necessary.

Overhead shall be charged for all requests for decertification, except where these areas are:

- A portion of an adjoining ownership that was inadvertently fenced within the right of way.
- Found parcels (parcels outside the defined limits of the highway).

Excess Land shall request a separate 926XXX expenditure authorization from Resource Management for each request in order to furnish a final bill to the requesting party and shall monitor to ensure that charges do not become unreasonable in comparison to the value of the property. Exceptions must be fully documented in the files.

DEPOSITS - REQUESTS TO DECERTIFY AND PURCHASE	
Condition	**Action**
The requested rights can be decertified and are salable.	Retain the amount of the deposit that equals Department expenses and overhead charges for all functional areas expending effort for the decertification, including, but not limited to, Environmental, R/W Engineering, Project Development, and Right of Way. This includes preparation and review of fair market value appraisals. Apply the balance of the deposit to the sales price of the property if the requesting party decides to complete the purchase.
The rights are found to be salable, but the requesting party decides not to complete the purchase.	Retain that portion of the deposit attributable to the costs of investigation. Internal processing costs include, but are not limited to: • Actual salary and overhead costs (Right of Way overhead assessment rate, which may be obtained from Region/District/Region Resource Management) to obtain approvals for decertification. • Right of Way Engineering costs for map and deed preparation, reproduction, and reestablishment of survey monumentation. • Costs of rearranging utilities, fencing, landscaping, and other improvements affected by the decertification. If overhead costs exceed the deposit, an additional payment is required in the amount of the overage.
The area sought to be acquired cannot be decertified.	Refund all monies except the cost of investigation.

16.05.13.00 Option-Purchase Agreement up to Two Years (Public Sales and Qualifying Direct Sales)

CTC Resolution G-2 (as amended) authorizes the use of an Option-Purchase Agreement for up to two years. This alternative allows a developer time to make necessary studies, complete the local zoning request process, and arrange financing on properties with development potential. Such properties would include large unimproved sites with commercial or industrial development potential. This method may be used in competitive bidding situations and qualifying direct sales in the more difficult-to-sell, high-value, or specialized property.

On Federally participating parcels or those eligible for Federal participation, HQ R/W will request FHWA authorization to extend the Federal reimbursement end date to equal the option period. This will be done prior to HQ R/W approving the use of an Option-Purchase Agreement or any extensions.

The purchase price is set at the highest bid (or current market value for direct sales) when signing the Option-Purchase Agreement. The option deposit may be less than ten percent of the purchase price. However, if the deposit is less than ten percent, additional deposits shall be collected at regular, preestablished intervals to equal at least ten percent per year by the end of the term of the option. The option deposits shall be applied toward the option price and are otherwise nonrefundable.

An Option-Purchase Agreement gives the purchaser the right, but not the obligation, to purchase the property.

Excess Land must prepare a marketing analysis demonstrating this method will maximize the return to the State. The analysis is retained in the Region/District and a copy must be forwarded to HQ R/W for review and approval. The Option Agreement shall explicitly state that it is subject to Department approval.

Airspace Advisory Committee review of the proposed Purchase Option and any extensions of the Option are required when the sales price is $1 million or more. For Purchase Options at or above this threshold, the Purchase-Option Agreement shall explicitly state that it is subject to AAC review and recommendation.

CTC approval of the option price and terms is required at the time an optionee acquires the Purchase-Option and any subsequent extensions. The Purchase-Option Agreement shall explicitly state that it is subject to CTC approval.

16.05.14.00 Lease-Purchase Agreement and Partnering with an Adjoining Owner (Public Sales and Qualifying Direct Sales)

The Lease-Purchase Agreement and Partnering with an Adjoining Owner were approved by Agency Action Request on April 15, 1997, and their use requires HQ R/W approval.

The use of either alternative shall be limited to cases where good faith attempts to sell the property have been unsuccessful or where the property is not yet ready to sell and the marketing analysis predicts that it will be difficult to sell.

The lease term should be relatively short and the Lease-Purchase Agreement should obligate the tenant-buyer to purchase the property at the end of the lease.

On Federally participating parcels or those eligible for Federal participation, HQ R/W will request FHWA authorization to extend the Federal reimbursement end date to equal the lease period. This will be done prior to HQ R/W approving the use of a Lease-Purchase Agreement or any extensions.

The purchase price is set at the current market value when the Lease is executed. The tenant-buyer is required to pay an up-front consideration equal to one percent or more of the purchase price. The up-front consideration shall be applied toward the purchase price or is otherwise forfeited. The tenant-buyer shall pay above fair market rent. A rent credit percentage must be established according to prevailing practice and will be applied to the purchase price or is otherwise forfeited.

The Region/District must prepare a marketing analysis demonstrating this method will maximize the return to the State. The analysis is retained in the Region/District and a copy must be forwarded to HQ R/W for review and approval. The Lease-Purchase Agreement shall explicitly state that it is subject to Department approval.

AAC review of the proposed Lease-Purchase and any extensions is required when the sales price is $1 million or more. For Lease-Purchase at or above this threshold, the Lease-Purchase Agreement shall explicitly state that it is subject to AAC review and recommendation.

CTC approval of the up-front consideration, lease rate, purchase price, and terms is required before the Lease becomes effective. The Lease-Purchase Agreement shall explicitly state that it is subject to CTC approval.

16.05.15.00 Use of Private Brokers (Including Public Auction Brokerages)

Agency Action Request approved April 16, 1997 provides that a private broker, including a public auction brokerage, with prior HQ R/W approval, may be hired to provide broader exposure for specialized or high value properties than could be realized under the normal public sales processes. This includes properties infrequently marketed by the State, such as office buildings or other commercial and industrial properties.

A broker or public auction brokerage should only be used when previous public sales attempts have not been successful and Excess Land believes there will not be sufficient qualified buyers to achieve the highest price. Broker or public auction brokerage participation should only be used if the sale cannot be conducted satisfactorily by the Excess Land Agent (Government Code Section 19130b).

A broker or a public auction brokerage must be solicited on an "open listing" basis. A licensed real estate broker may submit a bid, less their commission, on behalf of a potential buyer. The highest bid less the commission is selected.

A public auction brokerage and, in rare instances, a real estate broker, must be selected by a competitive process under the State's contracting process.

16.05.16.00 Relinquishment or Sale of Access Rights Requiring FHWA Approval

FHWA approval of a proposed relinquishment or sale is required when any portion of the affected right of way lies within the access control lines, as shown on the plans for a federal-aid project previously approved by FHWA. Project Development determines when access rights are no longer needed and obtains the necessary approval from FHWA. Right of Way Engineering should notify Project Development at the earliest practicable time of proposals to relinquish or sell access rights. This gives Project Development adequate time to obtain FHWA approval and prevents processing delays.

NOTES:

16.06.00.00 - FEDERAL HIGHWAY ADMINISTRATION REQUIREMENTS ON DISPOSAL OF EXCESS LAND

16.06.01.00 General Policy Regarding Acquisition of Excess

Federal statute (Public Law 105-178, the Transportation Equity Act for the 21st Century, Section 1303) provides that "the Federal Share of the net income from the revenues obtained by the State under subsection (a) shall be used by the State for projects eligible under this title." Because net proceeds of excess land sales are deposited in the State Highway Account, Excess Land need not segregate federally reimbursed excess proceeds from nonfederally reimbursed excess proceeds, and no federal credits are required. By letter dated March 4, 1999 with FHWA concurrence dated March 8, 1999 (see Exhibit 16-EX-25), Caltrans has met the requirements of Public Law 105-178 and is not required to track and report expenditures from these revenues by project.

NOTES:

16.07.00.00 - PROCESSING TRANSACTIONS

16.07.01.00 General

Region/District Excess Land is responsible for review of all excess land transactions prior to submission to the CTC. If the Region/District has a unique or unusual transaction, informal discussions or field reviews with HQ R/W staff are encouraged to resolve any questions prior to submitting the package. After Excess Land reviews the complete transaction package and finds it acceptable, the excess land resumé is presented to the CTC for approval. Resumés are transmitted to HQ R/W for placement on the CTC agenda.

Excess Land is to prepare and retain in the parcel file all applicable items shown on the table entitled "Excess Land Disposal File Documentation." Region/Districts may use the resumé checklist (16-EX-26) to assist in reviews.

16.07.02.00 Deed Approval Delegated to Region/Districts

Region/Districts may approve and execute Director's Deeds on behalf of the Department of Transportation for excess land conveyances that qualify under Section 2.4, 2.5, and 2.8 of CTC Resolution #G-2 (as amended). (See Exhibit 16-EX-6.)

For all CTC delegated items, the Region/District should submit to HQ R/W:

- Copy of the executed unrecorded deed.
- Copy of the RW 16-1.

16.07.03.00 Transmittal of Director's Deed to HQ R/W

The Region/District uses the InterRegion/District Route Slip to transmit requests for placement of Director's Deeds on the CTC agenda to HQ R/W with:

- One copy of the "Excess Land Transaction Resume (RW 16-8).
- One copy of RW 16-1.
- The original Director's Deed.
- Administrative Authorization (if necessary) for adjustments to direct sale price (see Section 16.05.05.01).

The original deed is returned to the Region/District upon approval by the CTC. A copy is made and retained in HQ R/W files.

The Region/District executes and records the Director's Deed and sends the original to the purchaser, retaining a copy for the Region/District parcel file.

16.07.04.00 Deadline for Submitting Package to HQ R/W – CTC-Approved Deeds

Generally, Excess Land should transmit all material requiring submission to the CTC so that it is received in HQ R/W a month prior to the CTC meeting. HQ R/W notifies the Region/Districts of the cutoff date as soon as the CTC schedule is available. Director's Deed packages received after the cutoff date will be held for the next scheduled CTC meeting.

16.07.05.00 Airspace Advisory Committee Review (AAC) of Excess Land Transactions

The AAC will review and make recommendations for all direct sales of inventory property valued at $1 million or more. Such reviews will precede submission to the CTC. Non-inventory properties, as defined in Section 16.01.03.03, are excluded from AAC review.

Because the AAC only meets quarterly, Excess Land Managers must consider this review requirement when planning and scheduling CTC submittals of direct sales subject to AAC review. Assistance in preparing presentations to the AAC may be sought from HQ R/W.

16.07.06.00 Recordation of Director's Deeds

Excess Land shall record all Director's Deeds prior to delivery to the purchaser, except for conveyances to other public agencies. The Director's Deed may be delivered to an escrow agent, when applicable, with appropriate instructions regarding recordation and payment of transfer costs. Recordation costs are borne by the purchaser, except as noted in Section

16.05.05.02. The Department will not participate in any other costs involved in the transfer of title, such as escrow fees and policies of title insurance.

Deeds to other public agencies may be delivered to them for acceptance and recordation. The public agency is required in these cases to provide Excess Land with recording data when available.

EXCESS LAND DISPOSAL FILE DOCUMENTATION	
Item	**Explanation**
Excess Land Transaction Resumé - CTC-approved deeds only	Prepared on RW 16-8.
RW 16-1	For multiple-parcel disposal units, include a separate RW 16-1 (sections I, II, and III) for each parcel in the disposal unit, and a recapitulation in sections IV through VI-A/B.
Director's Deed	The original is returned to the Region/District upon approval by the CTC. It is then executed in the Region/District, recorded by Excess Land, and sent to the buyer. A copy is retained in the Region/District's parcel files.
Parcel Map	Clearly showing the property to be conveyed, and, for direct sales, identifying all adjoining owners and any abutting State-owned excess land.
Appraisal Report or Public Sale Estimate (PSE)	Original or copy.
Vicinity Map	In sufficient detail to show the property being conveyed in relation to adjacent streets and highways.
Correspondence	Copies of any correspondence or other information that has bearing on the disposal, gives a total picture of the transaction, or facilitates review (e.g., legal opinions, legislative inquiries, administrative authority to sell for less than appraised value or minimum bid.)
Purchase Agreement	One copy.
Additional Information	Memorandum of Substantial/Nonsubstantial Reduction For parcels that were not originally full-take acquisitions and all Finding B conveyances shall contain the following statement in the property description section of RW 16-1: "A parcel review has been completed and there are no contractual obligations." If contractual obligations are found, their disposition shall be explained in full.
Adjustments	For VTA of rescinded route parcels and any other adjustments to VTA on RW 16-28.
R/W Contract	Copy of the contract and any amendments, the MOS, and a parcel map for exchange transactions.
Note and Deed of Trust	One copy retained in Region/District files. (Original sent to ASC until reconveyed.)
Utilities Agreement	Copy of the agreement establishing the State's obligation for transactions with utility companies.
Transfer of Control and Possession Agreement	Archive copy. For conveyances to other State agencies.
Notice of Determination	For those parcels that require an environmental document. (See Section 16.03.02.00).

16.07.07.00 Cancellation of Sale Prior to CTC Approval

At the Region/District's discretion, Excess Land may cancel a sale prior to CTC approval. Excess Land shall act expeditiously to notify all concerned parties of the cancellation and to reschedule the sale of the excess land at the earliest possible date. The reasons for the cancellation are documented in the parcel file. If a bidder requests cancellation of sale prior to CTC approval, Excess Land retains that portion of the deposit representing actual damages; i.e., cost of sale and loss, if any, due to a lower selling price received at the subsequent resale of the property.

16.07.08.00 Cancellation of Sale Prior To Recordation

Prior to recordation of the deed, the buyer or the State may wish to withdraw from the sale if it is discovered that the condition of the parcel has changed to the detriment of the buyer or material facts advertised in the selling of the parcel were in error. Under these circumstances Excess Land has the following options:

- Cancel sale and notify CTC.
- Request CTC approval to adjust the selling price.

16.07.09.00 Correction Deeds

When an executed Director's Deed contains deficiencies or defects in the legal description and a Correction Deed must be secured, either before or after recording of the original, Excess Land shall consult with Right of Way Engineering for appropriate corrective measures.

Director's Deeds to correct legal descriptions in previous conveyances do not require submission to the CTC. (See Exhibit 16-EX-6, section 2.) File documentation for correction deeds must clearly state the error being corrected and cite the delegated authority to approve.

Director's Deeds approved by the CTC requiring a change or correction in the vesting must be submitted to the CTC for approval with a resumé that summarizes the need for change or correction and recapitulates prior action by the CTC.

NOTES:

16.08.00.00 - CREDIT SALES

16.08.01.00 General

S&H Code Section 118 authorizes the Department to sell, contract to sell, sell by trust deed, or exchange real property, or interest therein, found to be in excess of highway needs upon terms, standards, and conditions established by the CTC. Sales that are subject to Measure Agency approval may be offered with credit terms that conform to the sponsoring measure agency's policies and procedures.

The payment period in any such contract of sale or sale by trust deed shall not extend longer than 10 years.

Such transactions with private parties shall require a down payment of at least 30% of the purchase price. Excess Land will verify the creditworthiness of the buyer of any property to be sold by Trust Deed. See R/W Manual Section 16.08.05.00.

16.08.02.00 Low- and Moderate-Income Housing

When unimproved real property is sold or exchanged for the purpose of housing for persons of low and moderate income, as defined in Section 50093 of the Health and Safety Code (see Section 16.12.04.00), the payment period may not exceed 40 years and the down payment shall be at least 5% of the purchase price.

All such contracts of sale or sales by trust deed shall bear interest. The rate of interest for any such contract of sale shall be computed annually and shall be the same as the average rate returned by the State's Pooled Money Investment Fund for the five fiscal years immediately preceding the year in which the payment is made.

Such contracts of sale or sale by trust deed shall not be used if the proposed development or sale qualifies for financing from other sources and if such financing makes feasible the provision of low and moderate income housing.

Any such real property or interest therein may, in like manner, be exchanged either as whole or part consideration for any other real property or interest therein needed for State highway purposes.

16.08.03.00 Credit Sale by Trust Deed

Credit terms should not be offered when adequate financing is available. Excess Land should investigate information about potential sources of long-term financing and provide the information to prospective bidders in advance of the sale. Credit terms are limited to properties selling for $10,000 or more. Sales under $10,000 must be for cash, except for those sold under informal time payment plans (see Section 16.05.04.00). Requirements for credit sales are shown on the table entitled "Credit Terms - Sale by Trust Deed" on the following page.

All improved residential property sold to a local public agency, if subsequently sold or transferred to a nonprofit housing organization, shall be endorsed by the city in which the parcels are located, or the county if located in an unincorporated area. The endorsement shall provide that the housing remain at affordable costs to persons and families of low or moderate income and very low income households for the longest feasible time as determined by the city or the county, but not less than 15 years. By endorsing such a sale, the city or county accepts responsibility for ensuring the housing remains affordable. The local public agency shall record covenants or restrictions implementing this provision in the office of the county recorder. Notwithstanding any other provision of law, the covenants or restrictions shall run with the land and shall be enforceable against the original purchaser from the department and successors in interest.

16.08.03.01 Escrow Requirement

If the district is not using an internal escrow, the purchaser shall open an escrow with a title company satisfactory to both parties and shall deposit a fully executed Note and Deed of Trust into the escrow within 30 days after execution of the sales agreement. The balance of the down payment, equal to 30% of the purchase price, is due prior to recordation of the Director's Deed.. The Note and Deed of Trust shall be written in the amount of the balance of the purchase price and shall be payable to the State of California, acting by and through the Department of Transportation. The title company handling the escrow shall be the trustee, and the purchaser shall bear all costs.

CREDIT TERMS - SALE BY TRUST DEED		
Term	**Requirement**	**Type of Real Property**
Credit Check	All purchasers on credit terms, except for government agencies, must prove creditworthiness. The cost of the credit check will be borne by the purchaser.	All property.
Payment Period	Not to exceed 10 years	All improved real property. All unimproved real property with the following exceptions.
	Not to exceed 40 years	Unimproved real property sold or exchanged to provide housing for persons of low- or moderate-income.
	Not to exceed 20 years	Unimproved real property sold or exchanged pursuant to Government Code Section 54225 for park recreation or open space.
Down Payment	At least 30%	All real property, with the exception of unimproved property, to be used for low- or moderate-income housing.
	At least 5%	Unimproved real property sold or exchanged to provide housing for persons of low or moderate income.
Interest Rates - established semi-annually by HQ R/W	Prevailing market rate for 30-year fixed rate loans in the area	All improved residential properties.
	Prevailing market rate for 15-year fixed rate loans plus 2%	All other improved properties and vacant properties.
	Average rate (computed annually) returned by the State's Pooled Money Investment Fund for the past five fiscal years immediately preceding the year in which payment is made	Unimproved real property sold or exchanged to provide housing for persons of low or moderate income.

16.08.03.02 Provisions of Trust Deed and Note

The Trust Deed and Note shall designate the purchaser as Trustor; the title company as Trustee; and the State of California, acting by and through the Department of Transportation, as Beneficiary. The Trust Deed shall contain provisions substantially the same as shown on Exhibit 16-EX-6. These provisions are common to those contained in the standard forms of major title companies.

16.08.03.03 Processing of Director's Deed Sale With Trust Deed

The resume package prepared for the sale shall contain Form RW 16-1 indicating:

- The sale is on credit terms pursuant to Section 16.08.03.00.

- The amount of the deposit received.

- The date the required balance of the down payment will be deposited with the escrow agent.

16.08.03.04 Deposit of Director's Deed With Escrow Agent

The Department's escrow instructions, containing substantially the same language as shown on Exhibit 16-EX-17, shall be forwarded with the Director's Deed to the title company handling the escrow.

16.08.03.05 Retention of Trust Deed and Note

Excess Land shall forward the recorded Trust Deed and executed Note to ASC with a request to forward a statement to the purchaser. The statement shall provide for quarterly payments at the specified interest rate for the term of the Note. ASC is responsible for safekeeping the Note and Trust Deed during the term of the trust.

16.08.03.06 Full Reconveyance Upon Payment

Accounting shall notify the DDC-R/W upon receipt of final payment of the outstanding balance or written notice by the trustee that full payment has been deposited in escrow for the Department. The DDC-R/W shall request the DD to execute a Full Reconveyance.

Excess Land forwards the signed Note and Request for Reconveyance to the trustee for cancellation and issuance of the Full Reconveyance. The purchaser pays all fees in connection with the reconveyances.

16.08.03.07 Partial Reconveyances, Subordinations, and Assumptions

Partial reconveyances may be authorized if:

- It is in the Department's best interest.

- The remaining property is adequate security for the balance of the loan.

The district shall prepare a memorandum to the file, which shall explain and justify the proposed partial reconveyance and estimate the value of the remaining property. An appropriate fee will be charged to the borrower ($250 minimum).

Subordination of the Department's interest is limited to easements required by public utilities or public agencies in connection with a public project. All monies received by the purchaser in connection with conveyance of the subordinated interest are paid to the Department and credited against the principal obligation.

Excess Land shall document requests and justify subordination approvals in the excess land parcel file.

Assumption of a loan may be allowed with Caltrans' approval. An approved credit report and an Assumption Agreement (Form RW 16-18) are required.

16.08.03.08 Prepayments

The principal obligation under a Trust Deed may be prepaid in full or in part at any time without penalty. Partial payments made in advance of the regular schedule shall be applied against the principal obligation and shall not replace regularly scheduled payments.

16.08.03.09 Fire Insurance Coverage

The purchaser shall deposit with the escrow agent a Fire Insurance Policy in an amount commensurate with the value of any substantial improvements located on the parcel at the time of purchase. This Policy names the State of California, acting by and through the Department of Transportation, as co-insured with the purchaser if the improvements are of substantial value, habitable, or usable in connection with operation of the property.

Fire insurance policies are written to cover a one or three year period. Excess Land must assure that the policy is renewed prior to expiration of the prescribed term.

The State of California may be named as co-payee on a check for settlement of a claim resulting from fire damage to insured improvements. Excess Land shall forward the check to HQ R/W for endorsement along with a complete report of the extent of damage and a statement of the amounts, if any, to be paid to the State. Excess Land's recommendation should consider the outstanding balance under the Trust Deed and the security the remaining property represents.

16.08.03.10 Defaults

If the purchaser defaults after commencement of payments and recordation of the Trust Deed, Excess Land shall notify the trustee to begin default proceedings in accordance with terms of the Trust Deed. Excess Land shall take all actions necessary, including attendance at the default proceedings and payment of reasonable costs, to enter a bid in the trustee sale on the State's behalf. Excess Land should contact Legal regarding specific guidelines. ASC will provide the necessary calculations of amounts due.

Alternately, Excess Land may restructure the debt at the request of the purchaser provided that the original term, interest rate, and return to the State remain unchanged. Balloon payments or partitioning of a single note into two or more notes (where the property may be subdivided and developed or sold) are two examples of allowable debt restructuring. In any event, Excess Land shall ensure that the net sum of proceeds to the State, including, but not limited to, principal, interest, and late charges, is not reduced.

Excess Land must affirm that restructuring the debt would reasonably result in payment, and may make it a condition of approval to the purchaser to demonstrate such payment. If Excess Land determines that restructuring the debt would still result in a foreclosure, Excess Land must deny the request for restructuring and proceed with foreclosure.

When the purchaser requests a restructuring of debt, Excess Land shall advise the purchaser of the State's terms and limiting conditions noted above. If the purchaser agrees to those terms and conditions, Excess Land shall charge the purchaser a nonrefundable administrative fee of $750.00 to implement the restructuring.

16.08.03.11 Acceleration Clause in Trust Deeds

The acceleration clause shall be enforced if the purchaser sells the property by deed or installment contract. Before enforcing the clause, Excess Land should discuss the factual circumstances of the sale with Legal.

Enforcement of the acceleration clause is not required in the following instances:

- Conveyance of non-substantial utility easements.
- Conveyance of non-substantial portion of property for public purpose.
- Conveyance to either spouse resulting from dissolution of marriage.
- Encumbrance of the property with a second trust deed or other junior encumbrance by the purchaser.

16.08.03.12 Trust Deed Late Payment Penalties

Quarterly payments are due on the first day of the month beginning 90 days after close of escrow and the first day of each quarter thereafter. For example, if escrow closes on December 15, the first payment is due April 1.

All credit sale promissory notes shall provide for a penalty of 5% of any trust deed payment that is paid more than 10 days after its due date.

16.08.04.00 Trustor Bankruptcy

Excess Land should contact Legal and request assignment of an attorney immediately after being notified that the Department's trustor has filed for bankruptcy.

The Clerk of the Bankruptcy Court will send a Notice of Meeting of Creditors to the debtor, the creditors, and other interested parties. Excess Land should attend this meeting to ensure the Department is on the list of creditors filed by the debtor (trustor). If not, a proof of claim must be filed with the court within a specified time.

The State's attorney should attend all subsequent meetings and hearings to ensure protection of the Department's interest.

16.08.05.00 Credit Check

Excess Land shall establish the creditworthiness of prospective credit buyers. At a minimum, existing Department records must be reviewed to determine that the applicant is not currently in default on prior credit sales, and a satisfactory credit report must be received from an established credit reporting agency. The buyer shall pay the costs of the credit report at the public sale. Such costs are nonrefundable in the event the buyer defaults.

NOTES:

16.09.00.00 - RESCINDED ROUTE PROCEDURES

16.09.01.00 General

Excess parcels created by route rescission are subject to the requirements and instructions previously set forth in this Chapter, except as modified or supplemented in this section.

16.09.02.00 Phase I - Notice of Intention to Rescind

Phase I commences when the CTC passes a Notice of Intention to Rescind. The assigned project team consists of one representative from each of the district functions indicated in the following table.

PHASE I RESPONSIBILITIES	
Team Member	**Responsibilities**
Excess Land	Acts as team leader and coordinates the efforts of the project team. In coordination with Project Development, completes notification to governmental agencies immediately following a Notice of Intention to Rescind. Identifies properties subject to provisions of S&H Code Section 118.1 and notifies eligible tenants. Simultaneously coordinates and commences development of a Project Sales Plan, including estimated sales dates and probable disposal methods. Identifies parcels that may have significant environmental sensitivity and assumes responsibility for obtaining environmental clearance.
Right of Way Engineering	Provides project and parcel mapping where needed. Provides Director's Deeds and Director's Deed maps to team leader as soon as possible after the "Notice." Completes Items A through F on Rescinded Route Parcel Inventory, Form RW 16-7, covering each disposable property. Forwards the form to Property Management.
Property Management	Completes Items G and H on Form RW 16-7.
Planning and Management	Completes Items I, J, and K on Form RW 16-7. Identifies those parcels that meet the three qualifying criteria under S&H Code Section 118.5 for payment of back taxes to local taxing agencies.
Relocation Assistance	Compares the Rescinded Route Parcel Inventory forms to existing RAP records and determines the amount of relocation assistance that may be necessary, if any.

The project team shall:

- Complete a detailed inventory of all the Department's real property on the route segment that is a candidate for rescission within 30 days following passage of the Notice.

- Notify all appropriate State, regional, county, and city agencies as quickly as possible after the Notice of Intention to Rescind is passed. Notification should indicate the Department's intent to dispose of previously acquired rights of way and should satisfy the provisions of S&H Code Sections 118 and 118.6 and Government Code Sections 54220 et seq. and 54235 et seq. (See Exhibit 16-EX-2 for a suggested format of the notification letter or memorandum.)

- Develop Project Sales Plan.

- Complete Director's Deed and map for each property.

16.09.03.00 Phase II - Route Rescission

Phase II commences when the CTC rescinds the route adoption. The assigned project team consists of one representative from each of the district functions indicated in the following table entitled "Phase II Responsibilities." The Phase II team shall:

- Enter all Department-owned real properties on the rescinded route segment into the ELMS within 30 days following rescission.

- Settle all contractual, RAP, and other obligations in a manner equitable to both the Department and the property owners.

- Dispose of the excess properties.

16.09.04.00 Federal Advanced Acquisition Fund (FAAF)

The ultimate rescission of a route adoption and direction by the CTC to dispose of previously acquired rights of way requires the Department to withdraw the project from FAAF programming. Such withdrawal necessitates repayment of the full amount of advances received from FHWA and payment to FHWA of the net rental income received from any FAAF parcels on the project until the date of withdrawal.

16.09.05.00 Local Real Estate Taxes

S&H Code Section 118.5 requires the Department to pay local real estate taxes equal to the taxes that would have been paid had the property remained in private ownership. Such taxes shall be paid only in those instances where all three of the following criteria are met:

- The parcel was acquired by Final Order of Condemnation.

- No portion of the parcel that was acquired has ever been used for any of the purposes specified in S&H Code Section 104.

- The parcel is being offered at public sale.

The amount of any payments made pursuant to S&H Code Section 104.10 with respect to the property (24% of gross rent receipts) shall be deducted from the amount required to be transmitted pursuant to this section.

16.09.06.00 RAP Policy

After the CTC rescinds a route adoption, RAP policy requires that offers of RAP benefits and services be formally withdrawn from former owners and inherited tenants. Former owners who have remained in occupancy and tenant occupants who meet the criteria of CTC Resolution G-2 (as amended) are given the opportunity to purchase their property by direct sale.

All occupants should be encouraged to remain in occupancy as protection against vandalism. However, their right to occupy after the Director's Deed has been recorded will be dependent upon their working out an agreement with the new owner.

If occupants are forced to relocate from a dwelling as a direct result of the Department's disposal of the dwelling, within 90 days of the recordation of the Director's Deed, Relocation Assistance shall coordinate and accomplish the following pursuant to Government Code Section 54238.3(b):

- Provide relocation advisory assistance to affected parties where appropriate.
- Make relocation payments where appropriate.

Applicability of Government Code Section 54238.3(b) is limited to those routes identified in Right of Way Manual Section 16.10.01.00.

RAP-eligible former owners still in occupancy may elect to repurchase with applicable RAP benefits in accordance with existing policy.

RAP-eligible former tenants should be notified and advised of their eligibility in accordance with existing policy.

Excess land will normally be sold subject to the occupancy of existing tenants since State-initiated evictions may create renewed relocation eligibility unless the eviction is for cause. All proposed evictions of former eligible occupants should be mutually agreed to by Relocation Assistance and Excess Land. State-caused evictions of former RAP eligibles should only take place where there is a clear economic advantage or other compelling reason to do so.

Another action that may cause renewed eligibility for previously eligible occupants or for ineligible occupants is the sale of occupied excess to another public entity for ultimate clearance and use. All sales agreements with other public agencies must contain a clause specifying that the purchasing agency will assume responsibility for relocation benefits that may accrue to existing occupants. If agreement cannot be reached as to responsibility for relocation of existing occupants, the district should request a legal determination of liability before finalizing the sales agreement.

It is the responsibility of Excess Land to coordinate closely with the District RAP Manager to determine the most economical method of fulfilling the State's RAP obligations.

PHASE II RESPONSIBILITIES	
Team Member	**Responsibilities**
Excess Land	Acts as team leader and coordinates efforts for timely disposal of rescinded route properties. Enters parcels into the ELMS in accordance with the ELMS/EDP Users Handbook. Follows the Sales Plan developed during Phase I in sending appropriate notices to occupants. Handles purchase or lease requests from other governmental agencies in the normal manner. It is essential from a public relations standpoint that occupants be advised of the progress toward, and actual sale of, the parcels they are occupying. This element should be included in the plan.
Planning and Management	Requests HQ R/W to withdraw the rescinded route segment from FAAF programming, where appropriate. Works with local taxing agencies to clear the State's obligation, if any, under S&H Code Section 118.5. This responsibility is limited to those parcels identified during Phase I as meeting the three qualifying criteria. S&H Code Section 118.5 requires any back taxes to be paid prior to consummation of any public sale. It is important to clear any required back tax payments as soon as possible so that public sale of the parcel can occur promptly. Section 118.5 is imprecise about the method of calculating the Department's tax liability. If differences of opinion develop with a local assessor or tax collector, the District should work with District Right of Way Planning and Management to reach a reasonable settlement of the Department's back tax liability, if any. Provides a written certificate upon clearance of the Department's Section 118.5 obligation on a particular parcel.
Acquisition	Negotiates with former owners or their successors in interest on part-take parcels selected during Phase I for direct sale to such parties, including settlement of all deed and contractual obligations. Coordinates their efforts with other members of the Project Team.
Relocation Assistance	Reviews and updates occupancy data with Property Management and confirms RAP eligibility status of occupants. Promptly issues notices to all occupants who were previously offered relocation benefits, formally effecting the change of RAP eligibility.
Appraisals	Provides necessary appraisals or disposal value estimates when requested.

16.10.00.00 - SALES OF SURPLUS RESIDENTIAL PROPERTIES AND REPLACEMENT HOUSING

16.10.01.00 Sales of Surplus Residential Properties (SB 86-Roberti Bill)

Government Code Sections 54235, et seq., were added in 1979 pursuant to SB 86 (Roberti). These statutes require the Department of Transportation (Department) and other State agencies to dispose of surplus residential property (as defined) in accordance with procedures meant to:

- Preserve, upgrade, and expand the supply of housing available to persons and families of low or moderate income.
- Mitigate environmental effects, within the meaning of Article XIX of the California Constitution, caused by highway activities.

Section 54238.3(a), added in 1982, states that the sale of surplus residential property pursuant to Section 54235, et seq.:

> ***". . . shall apply only to surplus residential properties which were acquired for a State project, for which at least 20 dwelling units were acquired and owned by the State on January 1, 1980, or on the date the properties were declared to be surplus, whichever date occurs later. For the purpose of this Section, a freeway route and its interchanges shall be considered one State project. Except for State Highway Route 7 in Los Angeles County, this article shall not apply to freeway routes rescinded on or after January 1, 1984."***

NOTE: The above language effectively limits sale of surplus residential property at an affordable or reasonable price to the route segments on the table below entitled "Roberti Bill Surplus Residential Property."

ROBERTI BILL SURPLUS RESIDENTIAL PROPERTY		
Route	**County**	**Status**
Routes 143 and 244	Sacramento County	Sales completed
Route 92 between Route 17 (580) and adopted Route 238	Alameda County	Sales completed
Route 2 between Route 101 and Glendale Boulevard	Los Angeles County	Sales completed
Route 7 (710) between Route 10 and Route 210	Los Angeles County	Future of project undetermined

16.10.02.00 Definitions

16.10.02.01 Offer

To solicit proposals prior to sale in a manner calculated to achieve a sale under the conditions specified and to hold such offer open for a reasonable period of time. The time shall be no more than one year unless the selling agency, at its discretion, extends the time for a specified period.

16.10.02.02 Affordable Price

- **Purchaser, other than lower income household** - the price for residential property for which the purchaser's monthly payments will not exceed that portion of the purchasing household's adjusted income as determined in accordance with the regulations of the U.S. Department of Housing and Urban Development (HUD) issued pursuant to Section 235 of the National Housing Act.
- **Purchaser that is lower income household** - the price for residential property for which the purchaser's monthly payments will not exceed that portion of the purchasing household's adjusted income determined in accordance with HUD regulations issued pursuant to Section 8 of the United States Housing Act of 1937.

16.10.02.03 Single-Family Residence

A real property improvement used, or intended to be used, as a dwelling unit for one family.

In those instances where there are two or more separate improvements on a site, each of which is used (or intended to be used) as a dwelling unit for one family, consideration will be given to splitting or subdividing the site.

16.10.02.04 Surplus Residential Property

Land and structures owned by any State agency that is determined to no longer be necessary for such agency's use and is developed as single-family or multi-family housing, except property being held by the agency for the purpose of exchange.

"Surplus residential properties shall only include land and structures which, at the time of purchase by the State, the State had intended to remove the residence thereon and to use the land for State purposes."

In general, this definition applies only to improved residential properties that have become surplus by virtue of route rescission, route downscoping, and design changes.

The following types of properties are not considered as surplus residential property and will be disposed of in the normal manner:

- Residential improvements located on Department maintenance station sites or other operational sites that have been declared excess.
- Residential improvements located on lands that were acquired as excess wherein the Department did not intend to remove the improvements at the time of purchase.
- Surplus residential property being held by the Department for the purpose of exchange.
- Residential improvements located on agricultural lands if the improvements are used in conjunction with farm operations.
- Residential improvements that were acquired specifically for replacement housing purposes.

Any property that otherwise meets the definition of surplus residential property but is currently being used for a residential purpose that is inconsistent with the zoning or local jurisdiction's general plan for the property must be submitted to HQ R/W and Legal for review prior to disposal. Examples of such property include occupied housing units on an industrially or commercially zoned site or located on land that clearly has a higher and better use.

16.10.02.05 Displacement

Includes, but is not limited to, persons who will have to move from surplus residential property they occupy when it is sold by a State agency because they are unable to afford to pay the price the State agency is asking for the residential property.

16.10.02.06 Fair Market Value

Fair market value (see Appraisal Chapter) as of the date the Department makes the offer of sale pursuant to provisions of these statutes.

16.10.02.07 Affordable Rent

- **Occupant person or family other than person or family of low or moderate income -** rent for residential property that is not more than 25% of the occupant household's gross monthly income.
- **Occupant person or family of low or moderate income -** rent for residential property that is not more than the percentage of the adjusted income of the occupant or family as permitted under HUD regulations issued pursuant to Section 8 of the United States Housing Act of 1937, but not in excess of the market rental value for comparable property.

16.10.02.08 Area Median Income

Median household income, adjusted for family size as determined in accordance with HUD regulations issued pursuant to Section 235 of the National Housing Act, as amended (P.L. 90-448), for the Standard Metropolitan Statistical Area (SMSA) in which surplus residential property to be disposed of pursuant to this article is located, or the county in which such property is located if it is outside an SMSA.

16.10.02.09 Persons and Families of Low or Moderate Income

Persons and families of low or moderate income as defined by Section 50093 of the Health and Safety Code.

16.10.02.10 Lower Income Households

Lower income households as defined in Section 50079.5 of the Health and Safety Code:

> ***"'Lower income households' means persons and families whose income does not exceed the qualifying limits for lower income families as established and amended from time to time pursuant to Section 8 of United States Housing Act of 1937. The limits shall be published by the department in the California Administrative Code as soon as possible after adoption by the Secretary of Housing and Urban Development. In the event such federal standards are discontinued, the department shall, by regulation, establish income limits for lower income households for all geographic areas of the State at eighty percent of area median income, adjusted for family size and revised annually. As used in this section, 'area median income' means the median family income of a geographic area of the State."***

16.10.03.00 Procedures

16.10.03.01 Disposal of Surplus Land and Improvements

Whenever a surplus residential property consists of both a residentially-improved site and additional unimproved land capable of independent use/development, the total property shall be formally split or subdivided wherever possible so the unimproved land can be sold in the normal manner and independent from the improved portion of the property.

Residential improvements located on agricultural lands are not considered surplus residential property if the improvements are used in conjunction with farm operations.

A purchaser of a surplus residential property at less than fair market value may not subdivide the property and sell one portion at fair market value, even if the proceeds from the sale are to be used for low and moderate income housing on the remaining portion.

16.10.03.02 Payment of Transfer Costs

When selling surplus residential properties at or below fair market value, the Department may pay various costs such as points, recording fees, appraisal fees, title insurance, documentary stamp taxes, and others associated with the sale.

If an analysis of open market sales in the area indicates a particular custom, the Department shall follow that custom as long as the net is no less than the original acquisition price. Except, net proceeds may be reduced to less than the original acquisition price by the amount required for repairs.

The Department cannot participate in the cost of impounds, property taxes, and homeowners' insurance.

The Agreement for the Purchase of Real Property between the Department and the buyer is acceptable as supporting documentation for a claim schedule if the Department will pay such costs outside of escrow.

16.10.03.03 Unlawful Tenants

If present occupants (tenants) become delinquent in their rental payments or breach their Rental Agreement in another manner (such as overcrowding), the tenants should immediately be advised that such actions could jeopardize the benefits they are entitled to or that may be accruing under Government Code Sections 54235, et seq.

16.10.04.00 Sales of Single-Family Residences - Priorities

Government Code Section 54237 sets forth the following priorities for the disposal of single-family residences:

- All single-family residences presently occupied by their former owners shall be offered to such former owners at the appraised fair market value.
- All single-family residences shall be offered at an affordable price to present occupants (tenants) who have occupied the property two years or more and who are persons and families of low or moderate income.
- All single-family residences shall be offered at an affordable price to present occupants (tenants) who have occupied the property five years or more and whose household income does not exceed 150% of the area median income.

NOTE: Affordable price shall not be less than the price paid by the Department, unless the acquisition price was greater than the current fair market value, and shall not be greater than fair market value.

- All single-family residences that are not purchased by former owners or eligible present occupants shall be offered at a reasonable price to housing-related private and public entities.
- Any surplus single-family residence not purchased pursuant to the above shall be sold at fair market value, with priority given first to purchasers who are present occupants (tenants) and then to purchasers who will be owner occupants.

16.10.05.00 Sales to Former Owners Still in Occupancy

Sales to former owners still in occupancy at appraised fair market value shall be handled as shown in the table below.

Step	Responsible Party	Action
1.	Excess Land	Meet with former owners to determine interest.
2.	District RAP and Property Management	Determine repairs necessary to bring residence up to DS&S condition.
3.	Excess Land	Obtain current staff fair market value appraisal of residence reflecting repairs to be made.
4.	RAP	Calculate relocation assistance entitlements. Prepare and obtain approval of RAP claim.
5.	Excess Land	Make offer to former owner and obtain executed copy of Agreement for the Purchase of Real Property, Sale to Present Occupants, Form RW 16-9. **NOTE:** Eliminate references to Affordable Sales Price Calculation form and Right to Purchase Agreement between the Department and buyer since these documents are not used in fair market value sales to former owners.
6.		Submit transaction to CTC for approval (Form RW 16-8).
7.		Open escrow.
8.	Property Management	Expedite completion of necessary repairs.
9.	Excess Land	Close escrow.

16.10.06.00 Sales to Eligible Present Occupants (Tenants)

16.10.06.01 Eligibility Determination

Government Code Section 54237 establishes two eligibility requirements, as shown in the following table, for present occupants (tenants) based on term of residency and income limitations.

NOTE: The income limitations and term of residency requirements apply to all surplus single-family residence sales except sales on rescinded route 07-LA-2 in the Silver Lake-Echo Park area of the City of Los Angeles. Such sales are excepted by Government Code Section 54237(c); i.e., sales on rescinded route 07-LA-2 were described as mitigation measures in an environmental study prepared pursuant to the Public Resources Code and initiated prior to enactment of Government Code Section 54235, et seq.

ELIGIBILITY REQUIREMENTS - PRESENT OCCUPANTS		
Requirement	**Explanation**	**Test**
Minimum Term of Residency	Present occupants' term of residency can be determined by reviewing the Rental Agreement.	1) If present occupants' term of residency is less than two years, occupants fail the first test of eligibility. 2) If present occupants' term of residency will become two years or more, however, before sale of the residence can be finalized pursuant to other provisions of Government Code Sections 54235, et seq., they pass the first test of eligibility for direct purchase. 3) If present occupants' term of residence is two years or more, they pass the first test of eligibility.
Income Limitations and Reevaluation of Residency	Present occupants (tenants) who pass the initial term of residency test of eligibility shall certify their income by completing and signing an Income Certification, Form RW 16-10. Exhibit 16-EX-18 is a Table of Income Limits, adjusted for family household size, for counties in California. HCD will periodically adjust these income limits, and HQ R/W will forward the information to the districts.	1) Present occupants (tenants) with household incomes up to 120% of the area median income, adjusted for family size, must have a term of residency of two years or more. 2) Present occupants (tenants) with household incomes over 120% but not exceeding 150% of the area median income must have a term of residency of five years or more. 3) Present occupants (tenants) with household incomes in excess of 150% of the area median income fail the income limitation test and do not qualify to directly purchase the residence in which they reside at an affordable price.

16.10.06.02 Income Certification

The Income Certification is the most important step in the sales process since the affordable sales price is based on actual and expected income for all occupants.

Prospective home buyers normally maximize reported income on a loan application to qualify for the maximum loan possible. In the disposal of surplus single-family residential properties pursuant to Government Code Sections 54235, et seq., however, it is to the prospective buyers' (present occupants') advantage to disclose minimum income so as to minimize the affordable sales price.

When interviewing the occupants to complete the Income Certification, the Agent should ask them directly about each potential income source listed on the form.

16.10.06.03 Income Verification

The affordable sales price is not based on the unsupported word and Income Certification of the present occupants/prospective buyers. Excess Land must make diligent efforts to secure acceptable verification of income from an independent third party.

When there is a difference of opinion between the occupants and the Department, the Department's position prevails. Any decision must be fully documented and supported since the lender must be convinced an occupants' income is reliable for loan purposes.

Government Code Section 54237(c) states that Department:

> ***". . . may verify such certifications, in accordance with procedures utilized for verification of incomes of purchasers and occupants of housing financed by the California Housing Finance Agency."***

The California Housing Finance Agency (CHFA) Program Manual for Participating Lenders and Localities states that:

> ***". . . lenders must use the FNMA Guidelines to underwrite conventional loans . . . and that . . . good judgment should be used in reviewing income information."***

The Federal National Mortgage Association (FNMA) Conventional Selling Contract Supplement contains many of the provisions relating to sale of conventional mortgages to FNMA and represents the FNMA Guidelines referred to by CHFA. Section 311.03(c) of these FNMA Guidelines states that:

> ***"In cases where either borrower is self-employed, Seller (Conventional Lender) should submit, if available, audited profit and loss statements plus balance sheets for the last two year-end periods prior to borrower's application to Seller for the mortgage loan and signed Federal Income Tax Returns from the previous two years."***

Conventional lenders can demand copies of Federal Income Tax Returns from any and all borrowers to verify their income. If the borrowers refuse, the lender can deny the loan application.

Excess Land shall adhere to the following income verification procedure:

Self-Employed Status	Documentation
Either occupant-purchaser is self-employed	Obtain, if available, profit and loss statements plus balance sheets certified by a Certified Public Accountant for the last two year-end periods prior to occupants' Income Certification and signed Federal Income Tax Returns for the same two years.
Neither occupant-purchaser is self-employed	Concurrently with execution of Department's Income Certification, have each and every member of the household 21 years of age or older sign a Request for Copy of Tax Returns (Internal Revenue Service Form 4506 - Exhibit 16-EX-19). The request forms are retained in the excess land file and used to verify at least 10% of all Income Certifications and any other difficult or questionable cases.

All Federal Income Tax records received must be maintained by the district in accordance with the Information Practices Act of 1977. See "Public Access to Department Records and Personal Information" for the Department's guidelines.

In addition to Federal Income Tax Returns, Excess Land must use the following verification methods.

Method	Explanation
Written Verification	Written verification of income provided by the source of income is preferred over any other form of verification. Other forms are acceptable only when unsuccessful attempts have been made to secure direct written verification. Excess Land should send the request for written verification of income directly to the occupant's employer or other source of income. Written verification should be provided to Excess Land directly by the source of income without passing through the hands of the occupants or any other third party. When Excess Land has reason to question the validity of any verification, its accuracy should be confirmed by a telephone call to the source of income.
Other Forms of Verification	• Telephone verification with details of call noted in parcel diary. • Pay stubs or checks, with those representing most recent period given more weight. • Standard Benefit Scales, as to public assistance or unemployment compensation for a family of a given composition. • Standard Minimum Income Scales. • Photostatic copy of a current savings account passbook in which the bank or savings and loan records the account balance. • Letter from occupants' broker about stocks, bonds, and other forms of investment.

Excess Land should avoid duplicating a lender's income and employment verification efforts if the lender can and will share the results of their efforts. Primary responsibility for determining the occupants' income and their affordable sales price remains with the district however.

If income information provided by the occupants and verifying sources cannot be reconciled, Excess Land will establish the amount of income to be used as the basis for calculating the affordable sales price.

16.10.06.04 Affordable Sales Price Calculations

Present occupants who pass both the term of residency and income limitation tests shall be given the opportunity to purchase the residence in which they reside at an affordable price.

Affordable price has two definitions in Government Code Section 54236(b):

- **Purchasers that are lower income household -** The price that results in purchaser's monthly payments not exceeding that portion of the purchasing household's adjusted income as determined in accordance with HUD's Section 8 Program regulations.
- **Purchasers other than lower income household -** The price that results in purchaser's monthly payments not exceeding that portion of the purchasing household's adjusted income as determined in accordance with HUD's Section 235 Program regulations.

The two forms in the table below have been developed for calculating affordable sales prices.

Regardless of a present occupant's calculated affordable price (based on income), the final sales price cannot be less than the Department's original acquisition price nor greater than current fair market value.

If the present occupant cannot afford the original acquisition price, then that single-family residence must be disposed of pursuant to Government Code Section 54237(d).

CALCULATING AFFORDABLE SALES PRICES	
Form	**Sources of Information**
RW 16-11; Affordable Sales Price Calculations - Alternative A - where household income is below the lower income level.	For purposes of calculating an estimated affordable sales price, Excess Land should use schedules for maintenance and utilities available from the chief appraiser in the local HUD FHA area office. The final affordable sales price Allowance for Maintenance and Utilities should be based on amounts contained in the FHA appraisal of the property, if available.
RW 16-12; Affordable Sales Price Calculations - Alternative B - where household income exceeds the lower income level.	• The Allowance for Maintenance and Utilities (Item IV) should be handled in the same manner as described above for Alternative A. • Federal Income Taxes withheld (Item II), based on marital status and number of exemptions, must be taken from the Internal Revenue Service's most recent Circular E and Supplement Reprint (Publication 15), a copy of which should be available in District Personnel Offices. • State Income Taxes withheld (Item VIA), also based on marital status and number of exemptions, must be taken from the State of California Employment Development Department's most recent Employer's Tax Guide (Publication DE44), a copy of which should be available in District Personnel Offices. • Social Security Taxes withheld (Item VIB), must be taken (where applicable) from the Internal Revenue Service's most recent Social Security Employee Tax Table (Portion of Circular E), a copy of which should be available in District Personnel Offices. • Other Debts (12 months to run) (Item VIC) must be taken from the Liabilities Section of the Income Certification form.

If eligible present occupant(s)' affordable sales price calculation is equal to or exceeds the appraised fair market value of the property, the Department is required to offer the residence to the occupant at the appraised fair market value. The sale is not subject to conditions and restrictions to ensure continued affordability or restrict resale, but the Department remains liable to provide repairs.

If an eligible present occupant's income is suddenly and substantially reduced due to unemployment or other reasons, the district shall not immediately recalculate the occupant's affordable price based on the lower income level. Instead, the district shall continue to rent the residence to the present occupant and defer recalculation of the affordable sales price for up to one year if it appears possible the occupant's income will return to the prior level.

Even if present occupants are able to pay cash for a residence, their affordable price must be calculated in the normal manner. The source of such cash must, however, be explained in detail. If it is their funds, the funds must be shown on their Income Certification form. If the cash is a gift from another party, a letter regarding the gift must be obtained from the donor.

16.10.06.05 Financing

Excess Land should work closely with the present occupants to find the most appropriate and affordable financing program available to meet their needs. If private financing is not available, Excess Land may offer the Department's financing discussed in Section 16.08.00.00.

16.10.06.06 Repairs

Government Code Section 54237(b) states that whenever single-family residences are directly sold to the present occupants at an affordable price:

> ***"The selling agency shall provide repairs required by lenders and government housing assistance programs."***

The nature of required repairs will normally appear in a termite report, lender's appraisal, city inspection report, or similar document.

Property Management should provide all required repairs expeditiously so escrow can close.

Notwithstanding the provision in Section 16.10.04.00, the proceeds to the Department may be reduced to less than the original acquisition price by the amount required for repairs.

If the Department becomes the lender or if the occupants choose to pay all cash for a property, required repairs are determined by obtaining both an FHA Section 203(b) appraisal through a lending institution and a termite inspection report. Thus it can be said that repairs required by a government housing assistance program were provided.

In those instances where the cost of repairs appears excessive, Government Code Section 54237.5 allows the Department to provide the present occupants with a replacement dwelling if all of the following conditions exist:

- Providing a replacement dwelling is less expensive than providing the repairs required by Section 54237(b).
- The replacement dwelling is determined to have all of the following characteristics:
  - Is DS&S.
  - Is suitable to the occupancy needs of the household as provided under HUD regulations issued pursuant to Section 8, United States Housing Act of 1937.
  - Is open to all persons regardless of race, color, religion, sex, or national origin and consistent with requirements of Title 8, Civil Rights Act of 1978.
  - Is in an area generally not less desirable than the dwelling to be acquired in regard to public utilities and public and commercial facilities.
  - Is reasonably accessible to displacee's place of employment.
  - Is in an equal or better neighborhood.
  - Is affordable, as defined in Section 54236(a), to displacee.

- The offer is made at an affordable price that is not less than the price the Department paid for original acquisition of the unit now occupied by displacee or the replacement unit, whichever is less, and is not more than market value.
- The replacement dwelling is newly constructed or a vacant residential unit. No resident shall be displaced pursuant to Section 7260 for the purpose of creating a replacement unit.

If the eligible present occupants decline to accept a replacement dwelling under the above circumstances, the Department's obligation to offer them a single-family residence shall be considered fulfilled. The property cannot, however, be immediately sold at market value; it must first be offered to housing-related private and/or public entities.

The Department is obligated under Government Code Section 7265.3 to provide specified types of relocation assistance to persons temporarily displaced from their dwellings as the result of repairs and rehabilitation work financed by the Department. See Relocation Assistance Chapter for details.

16.10.06.07 Agreement For Purchase of Real Property

If the present occupants (tenants) are eligible and desire to purchase directly at an affordable price the single-family residence in which they reside, they shall sign an Agreement for the Purchase of Real Property, Sale to Present Occupants, Form RW 16-9.

Excess Land must obtain Legal Division approval before using any other form of agreement.

The offer letter to the present occupant(s) should include the following elements:

- Occupants should be given 30 days to sign the Agreement for the Purchase of Real Property and place $1,000 good faith deposit into escrow.

- Occupants should be given an additional 60 days to obtain a firm financing commitment.

- The district should commit to completing repairs as quickly as possible after being notified by the lender of any repairs required by the lender and government housing assistance program (if one is used).

- Both the district and the occupant-buyers should commit to closing escrow as quickly as possible after executing the Agreement for the Purchase of Real Property.

16.10.06.08 Resale Controls

Government Code Section 54237(b) provides that:

> ***"When such single-family residences are offered to present occupants at a price which is less than fair market value, the selling agency shall impose such terms, conditions and restrictions to assure that such housing will remain available to persons and families of low or moderate income and households with incomes no greater than the incomes of the present occupants in proportion to the area median income."***

Excess Land shall use Right to Purchase Agreement Between Caltrans and Buyer, Form RW 16-13, as the resale control document referred to above.

Excess Land must meet with the present occupants and explain the Right to Purchase Agreement before it is signed. It is recommended that the sales price amount in paragraph 4 and median income amount in paragraph 6(E) be filled in and initialed just prior to close of escrow.

The Department, HCD, and HUD have fully approved the Right to Purchase Agreement. The CTC has only approved use of this document on selected rescinded routes. The district should check with HQ R/W to determine if CTC approval has been obtained for routes in their district.

A Delegation of Authority from the Director to enable appropriate district employees to execute this document will be processed if a delegation does not presently exist.

The following clause must be added (immediately following the property description) to each Director's Deed pertaining to a surplus residential property disposed of at an affordable price that is less than current fair market value:

> "As a covenant running with the land, this conveyance is made subject to those conditions, restrictions, limitations, and terms contained in that certain Right to Purchase Agreement, dated _____, between the grantor, State of California, and the Grantees, _____, attached to this deed and made a part hereof by this reference, binding upon all heirs, devisees, successors, assignees, and subsequent purchasers."

16.10.06.09 Required Documents

District files for disposal of single-family residences pursuant to Government Code Section 54237 shall contain the following documents:

- Director's Deed - with appropriate vesting and clause referring to Right to Purchase Agreement between Department and buyer.
- Résumé - (Form RW 16-8).
- Staff or lender's appraisal - with indication that lender's appraisal has or has not been approved by District Appraisals.
- Affordable Sales Price Calculation - copy of completed form.
- Income Certification - copy of executed document.
- Form RW 16-1.
- Agreement for the Purchase of Real Property, Sale to Present Occupants - copy of executed agreement.

The Director's Deed submittal package submitted to HQ R/W for placement on the CTC agenda shall consist of the Excess Land Transaction Résumé (Form RW 16-8) and the original and one copy of the Director's Deed.

16.10.06.10 Lender-Required Appraisals

Most lenders will require an independently prepared FHA, VA, Cal-Vet, or other appraisal before an escrow can be finalized. A lender-required appraisal establishes that a loan is well secured and does not affect the Department's sales price.

A reasonable determination of fair market value is desired as the Department has a responsibility to the purchasers of surplus residential properties, as well as a responsibility to account for the cost of this disposal program.

Excess Land must obtain a copy of the lender's complete appraisal and retain it in the parcel file. For FHA appraisals, this includes what is considered a work sheet that lists the specific comparable sales used by the FHA appraiser.

The Department will accept a lender-required appraisal in lieu of a staff appraisal when a surplus residential property is disposed of at less than current appraised fair market value pursuant to SB 86.

Appraisals is not required to review lender appraisals.

If there is no lender-required appraisal, a staff fair market value appraisal must be completed in accordance with existing instructions.

16.10.06.11 Property Taxes After Sale

By letter dated July 7, 1981 (attached as Exhibit 16-EX-20) to all County Assessors, the State Board of Equalization indicated that the Department's resale control document (Right to Purchase Agreement) is a land use restriction within the meaning of Revenue and Taxation Code Section 402.1. Consequently, the valuation for tax purposes of properties subject to this Agreement should be based upon the property's sales price.

16.10.06.12 Check List

- Determine present occupants' term of residency from Rental Agreement.
- Meet with present occupants to explain sales program and obtain Income Certification.
- Verify occupants' income.
- Calculate estimated affordable sales price for present occupants who are eligible based on term of residency and income.
- Have Agreement for the Purchase of Real Property, Sale to Present Occupants signed, with copy to lender and open escrow.
- Have present occupants contact lender to prequalify for loan.
- Order appraisal through lender.
- Order termite report.
- Have present occupants qualify for loan.
- Have Appraisals review lender's appraisal and concur with value.
- Prepare estimates for all termite work and other repairs required by termite company or lender.
- Submit Director's Deed submittal package to HQ R/W for CTC review and approval.
- Compare information on Income Certification with information on loan application and recalculate affordable price, if necessary.
- Upon CTC approval of sale, have all required repairs completed.
- Calculate final affordable sales price.
- Sign Right to Purchase Agreement and place into escrow.

NOTE: When transmitting final documents, such as Right to Purchase Agreement, to escrow, the escrow agent must be told that such documents are good for only a limited time, say 30 days. This will allow submittal of new documents, where necessary, if the interest rate changes requiring recalculation of affordable price, or if the median income changes requiring change to paragraph 6.E. of Right to Purchase Agreement.

- Close escrow.

16.10.07.00 Sales to Housing-Related Private and Public Entities

Government Code Section 54237(d) states that the Department shall offer all surplus residential properties not purchased by the former owners or the present occupants:

> ***". . . to housing-related private and public entities at a reasonable price, which is best suited to economically feasible use of the property as decent, safe, and sanitary housing at affordable rents and affordable prices for persons and families of low or moderate income, on the condition that the purchasing entity shall cause the property to be rehabilitated and developed as limited equity cooperative housing with first right of occupancy to present occupants, except that where the development of such cooperative or cooperatives is not feasible, the purchasing agency shall cause the property to be used for low and moderate income rental or owner-occupied housing, with first right of occupancy to the present tenants. The price of the property in no case shall be less than the price paid by the agency for original acquisition unless the acquisition price was greater than current fair market value, and shall not be greater than current fair market value. Subject to the foregoing, it shall be set at the level necessary to provide housing at affordable rents and affordable prices for present tenants and persons and families of low or moderate income. When such residential property is offered at a price which is less than fair market value, the selling agency shall impose such terms, conditions and restrictions as will assure that such housing will remain available to persons and families of low or moderate income. HCD shall provide to the selling agency recommendations of standards and criteria for such prices, terms, conditions and restrictions."***

It is important to note the following:

- Sales price must be reasonable, but not less than the Department's original acquisition price.
- Purchasing entity, not the Department, shall rehabilitate the property.
- The present occupants shall have the first right of occupancy after sale at an affordable price or affordable rent.
- Resale and re-rent controls are necessary if properties sell for less than fair market value.

16.10.08.00 Request for Proposals

Offers to housing-related private and public entities are accomplished by a Request for Proposals (RFP) process using Form RW 16-14.

Income Certifications, Form RW 16-10, should be obtained from as many present occupants of offered surplus residential properties as possible so interested housing entities can estimate the affordable rental income the property will generate.

The RFP should be sent to all known housing-related entities in the district. A booklet entitled "Roster-California Housing Authorities," available from HCD, lists housing authorities and other housing offices in the State.

At the time the RFP is distributed, a notification shall be placed in the real estate classified section of newspapers of general circulation in the area where the properties are located (see Exhibit 16-EX-21). The notification should include addresses of the properties available for sale and should appear in the newspapers for three consecutive days. The newspaper notification helps identify any other housing-related entities that may be interested in acquiring the properties.

So that housing entities have sufficient time to gather and review all information necessary to submit a proposal, copies of the RFP shall be distributed at least 90 days prior to the deadline for submitting proposals.

16.10.08.01 Review and Selection of Proposals

A three-member committee consisting of one representative each from District Right of Way, HQ R/W, and HCD reviews proposals for acceptance.

Appraisal staff reviews each Proposal Form (RFP Attachment B) to validate the reasonableness of offers.

Thereafter the committee reviews and selects the proposal that best meets the following priorities:

- Offers the highest price to the Department.
- Serves the largest number of low- and moderate-income households at affordable prices or affordable rents.
- Demonstrates innovative use of public or private funds and is feasible in the current market.
- Serves an underserved segment of the community as defined in the local jurisdiction's Housing Element of its General Plan, if such an element has been finalized.

16.10.08.02 Financing

The Department may offer financing as discussed in Section 16.08.00.00.

16.10.08.03 Agreement for the Purchase of Real Property

The housing-related entity submitting the best proposal must immediately sign a copy of an Agreement for the Purchase of Real Property, Sale to Housing Entity, Form RW 16-15.

16.10.09.00 Resale Controls - Sale to Housing Entity

Excess Land shall use Note and Agreement Secured by a Deed of Trust and Deed of Trust, Forms RW 16-16 and RW 16-17, when surplus residential properties are sold to housing-related entities at a reasonable price that is less than current fair market value.

Excess Land must administer the Note and Agreement, Form RW 16-16, for a minimum of 30 years after the document is recorded. Administration includes the activities listed in the sections below.

16.10.09.01 File Maintenance

Excess Land shall maintain files for all surplus residential properties sold to housing entities subject to the Note and Agreement along with a list of the files. The files must be readily available for the duration of the resale controls and include the following:

- All documents submitted to the CTC (see Section 16.10.10.00 below).
- Details of the condition of the property at time of sale, including repairs required by lenders pursuant to paragraph 9 of the Agreement for the Purchase of Real Property, Sale to Housing Entity, Form RW 16-15.
- List of household income and rental schedule for the initial occupant(s).

16.10.09.02 Annual Review of Properties Sold to Housing Entities

Excess Land shall annually review all properties sold to housing entities subject to a Note and Agreement Secured by a Deed of Trust to determine if the following restrictions are being adhered to:

- Buyer is using the property to provide housing to families of low and moderate income in accordance with Government Code Section 54235, et seq.
- Buyer is charging rent that is not in excess of affordable rent for occupants of the property. To ensure this, buyer is required each February 1 to submit a report detailing use of the property and rental rates charged for the preceding year.
- Buyer has rehabilitated the property as required per paragraph 9 of the Agreement for the Purchase of Real Property and is maintaining it in compliance with applicable local building and safety regulations.
- Buyer has not sold or otherwise transferred the property without prior written consent of the Department.
- Buyer has at all times maintained fire insurance on the property at a level of at least 80% of replacement cost and has provided that the insurance policy names the Department as an additional insured. Excess Land should ask buyer to send a copy of the annual fire insurance renewal notice to the district for its file on the property.

16.10.09.03 Determination of Noncompliance

If the violation can be corrected, buyer shall be given 60 days to rectify the violation.

If the buyer does not rectify the violation within the 60-day period, the district may declare the buyer to be in default of the terms of the Note and Agreement and proceed to foreclose in accordance with the terms of the Note and Agreement and the Trust Deed.

The Note and Agreement provides that if the buyer violates the terms, conditions, and restrictions and the district institutes foreclosure proceedings, the buyer agrees to pay the Department a principal amount equal to the difference between the actual price paid by buyer for the property and the current fair market value, as determined by the Department, plus 6% simple interest per year on such amount, for the period of time the property has been held by the buyer.

Because of the complexity of the resale control mechanism and possible litigation, HQ R/W may be contacted prior to beginning formal foreclosure proceedings.

16.10.09.04 Overhead Costs

Costs of administering resale controls shall be charged to EA 952137, MSA Code 662.

16.10.10.00 Submittal to CTC

District files for disposal of surplus residential properties at a reasonable price to housing-related entities shall contain the following documents:

- Director's Deed - with appropriate vesting.
- Resale Control Document - executed copy.
- Résumé - Form RW 16-8.
- Staff or lender's appraisal - with indication that lender's appraisal has or has not been approved by Appraisals.
- Selected Proposal.
- Form RW 16-1.
- Agreement for the Purchase of Real Property, Sale to Housing Entity - copy of executed agreement.

The Director's Deed submittal package submitted to HQ R/W for placement on the CTC agenda shall consist of the Excess Land Transaction Résumé (Form RW 16-8) and the original and one copy of the Director's Deed.

16.10.11.00 Sales at Fair Market Value

Government Code Section 54237(e) states that any surplus residential property not sold to former owners still in occupancy or to housing-related private and public entities:

> ***". . . shall then be sold at fair market value, with priority given first to purchasers who are present occupants and then to purchasers who will be owner occupants."***

16.10.11.01 Sales to Present Occupants

If the present occupants have the financial capability and are interested in direct purchase of the single-family residence in which they reside at current fair market value, the district should obtain a staff market value appraisal as quickly as possible and complete a sale in the normal manner.

If the property consists of more than one residential unit (e.g., duplex and triplex), the property must be sold pursuant to normal public sales procedures (see Section 16.05.04.00).

The property shall be sold "as is" since the Department is not obligated to provide repairs required by lenders or government housing assistance programs when selling surplus residential properties at fair market value pursuant to Government Code Section 54237(e).

In addition, there shall be no resale control document since the buyer is paying fair market value.

16.10.11.02 Sales to Non-Occupant Purchasers Who Will Become Owner Occupants

Surplus residential properties that remain unsold shall be set for a public sale.

Bids are invited from all bidders regardless of their willingness to sign an Owner-Occupant Certification, Form RW 16-21. Upon completion of bidding, the high bidder's status as to owner occupancy requirements is determined as follows:

- If the high bidder is willing to sign the Owner-Occupant Certification, they are determined to be the successful bidder.

- If the high bidder is not willing to sign the Owner-Occupant Certification, the auctioneer asks if anyone in attendance is willing to match or exceed the high bid and sign the Owner-Occupant Certification. An owner-occupant certifier who matches or exceeds the high bid is determined to be the successful bidder.
- If the high bidder is not willing to sign the Owner-Occupant Certification and no one else is willing to sign the Owner-Occupant Certification and match or exceed the high bid, the residence is sold to the high bidder without regard to occupancy.
- If two or more bidders are willing to sign the Owner-Occupant Certification and match or exceed the high bid, bids are opened to all bidders and the procedure outlined above is used to determine the successful bidder.

The successful bidder who receives preference by signing an Owner-Occupant Certification is not allowed to assign their interest. Any assignment will result in cancellation of the sale and retention of the bid deposit.

16.10.12.00 Administration of Resale Controls After Sale to Present Occupants

Unlike most other excess property sales, the Department's involvement with surplus single family residences sold for less than market value at an affordable price does not terminate upon recordation of the Director's Deed.

Excess Land must administer the Right to Purchase Agreement, Form RW 16-13, between the Department and buyer for a minimum of 30 years after the document is recorded. Administration includes the activities discussed in the sections below.

These parcels are entered in the ELMS with Follow-Up Codes 4. or 8. and are shown in the RWM 824-Post Disposal Management Report.

16.10.12.01 File Maintenance

Excess Land shall maintain files for surplus single family residences sold subject to a Right to Purchase Agreement along with a list of the files. The files must be readily available for the duration of the resale controls and include the following:

- All documents listed in Section 16.10.10.00 above.
- Detailed interior and exterior photographs of the SFR depicting its condition at time of sale by the Department, including those repairs provided by the Department pursuant to Section 16.10.06.06 above.
- A copy of the specifications detailing the repairs referred to above.
- If buyer secured financing to buy the property, the lender must include in the deed of trust securing the note a provision that any power of sale is subject to the Right to Purchase Agreement. This occurs at time of initial sale and can be confirmed by obtaining a copy of the deed of trust. No reconfirmation should be necessary.
- A notation in the parcel diary about the household income of the initial buyers in proportion to area median income at time of initial sale; e.g., 0-25%, 26-50%, 51-75%, 76-90%. This is necessary to aid in choosing the next buyer who should have an income comparable to the initial buyer.

16.10.12.02 Annual Review of Properties Sold Subject to a Right to Purchase Agreement

Excess Land shall annually review properties sold subject to a Right to Purchase Agreement. Form RW 16-23, Annual Certification of Ownership Conditions, is used to determine if the buyer has complied with the following restrictions:

- Buyer has not leased or subleased the property, or any part thereof, or allowed parties other than buyer to live in the property without the prior express written consent of the district. A personal interview with the buyer at the residence should be sufficient to determine if this has occurred.

- Except for purposes of repairing or maintaining the property, buyer has not encumbered the property or any interest therein, in whole or in part, without the prior express written consent of the district.

  Excess Land must review records in either the County Recorder's office or a title company to make such a determination.

- Buyer has not made any substantial improvement to the property without the prior express written consent of the district.

  Substantial improvements are those that materially add to the value of the property or adapt it to new uses. Examples are: putting a recreation room in an unfinished basement, adding another bathroom or bedroom, adding a swimming pool, enlarging a garage, installing a fireplace, or constructing a patio.

  Substantial improvements do not include emergency repairs, maintenance, or work required by building or housing codes.

  An annual personal inspection and comparison of photographs taken of the property at time of sale and after repairs had been completed should reveal if buyer has complied with this restriction.

- Buyer has not sold, transferred, or assigned the property or any interest therein, in whole or in part, or agreed to do so, except for transfers to the buyer's spouse or children occasioned by the death or divorce of the buyer, without first complying with the procedures set out in paragraph 6 of the Right to Purchase Agreement.

  Excess Land must review records in either the County Recorder's office or a title company to make such a determination.

- Buyer has at all times maintained insurance on the property at a level of at least 80% of replacement cost and has provided that the insurance policy names the Department as an additional insured.

  Excess Land should ask buyer to send a copy of the annual fire insurance renewal notice to the district for its file on the property.

- Buyer has maintained property in compliance with applicable local building and safety regulations.

  Nothing in the Right to Purchase Agreement between the Department and buyer requires the buyer to maintain the property to any set standard. The buyer should be put on notice that the cost of repairs, rehabilitation, or replacement beyond the requirements of normal maintenance will be borne by the buyer if the buyer desires to sell the property.

16.10.13.00 Response to Requests and Inquiries

The nature of the Right to Purchase Agreement will result in the types of requests or inquiries from buyers shown on the table below.

REQUESTS/INQUIRIES - RIGHT TO PURCHASE AGREEMENT	
Inquiry	**Response**
Buyer requests to lease or sublease the property or allow parties other than buyer to live in the property.	Requests related to normal household growth may be approved if it is clear that the household growth is not merely bringing in other family members to share housing costs. Normal household growth is defined as increases in family size resulting from natural or adoptive children or other new family members in a clear dependency relationship, such as elderly or invalid parents who must live with the initial occupant-buyer. Excess Land may also authorize a nurse or companion to live in the property if the buyer's medical condition requires live-in assistance. Excess Land may not approve any requests to lease or sublease the property.
Buyer requests to add substantial improvements to the property.	As indicated in the Right to Purchase Agreement, an objective of this program is to ensure that properties remain affordable to households with incomes no greater than the income of the initial buyers in proportion to the area median income. Consequently, the Department shall minimize substantial improvements to any property by approving only those improvements that: • Cost the buyer less than $3,000; or • Are necessary to accommodate normal household growth; or • Are necessary for medical reasons; or • Increase the energy efficiency of the residence as supported by an energy audit report or review conducted by a utility company or similar entity. Such improvements may include, for example, solar heating systems, double-pane windows, and insulation. Excess Land may approve improvements that meet any of the above criteria after receipt of building plans approved by the local jurisdiction.
Buyer requests to encumber or refinance a property for purposes other than for repair or maintenance of the property.	When the buyer requests approval to refinance the existing loan(s) for the purpose of lowering the existing interest rate, Excess Land may process the request after district senior level or above review and approval. Such refinancing must be limited to the remaining balance of the existing loan(s), and the Department must not incur any costs as a result of this transaction. Excess Land may also approve requests to encumber or refinance property for purposes of making substantial improvements as noted above. In this category, refinancing is allowed up to the calculated amount that buyers would be entitled to in case of resale to the State (original selling price plus increased equity in relation to median income). No cost to the Department is allowed. District senior level or above review and approval of the proposal is required. Encumbrances involved in repair or maintenance of the property do not require approval. No other requests for refinancing are authorized.

16.10.14.00 Notice Of Intent To Sell, Transfer, or Assign

In the event that buyer, buyer's spouse or children who have title by reason of the death or divorce of buyer, or any owner who has title derived through foreclosure, deed in lieu of foreclosure, trustee's sale or otherwise desire to sell, transfer, or assign a property, they must notify the district in writing by certified mail of the intent to sell, transfer, or assign (hereinafter Notice of Intent).

The Department or its designee has 60 calendar days from the date of receipt of Notice of Intent in which to exercise its right to purchase the property. Because of the time limit, it is critical that Excess Land immediately begin the actions in the table on the following pages.

NOTE: The Department may exercise its right to purchase only for the purpose of making the property available to a person or family of low or moderate income or to a household with an income no greater than the income of the present occupants in proportion to the area median income at the time of sale.

If no prospective purchasers respond to newspaper advertisements or can be found through other means or if (after inspection of the available property by prospective purchasers) no household indicates a desire to purchase the residence at an affordable price, Excess Land shall assist owner in conducting a market value sale.

NOTE: ON RESCINDED ROUTE 7-LA-2 ONLY, if the Department fails to deliver a Notice of Acceptance within 60 days after receipt of the Notice of Intent, HCD or its designee may exercise the Right to Purchase by delivering a written Notice of Acceptance to buyer by personal delivery or certified mail within 30 days after the date on which the Department's 60 days to exercise has expired.

Only if HCD waives its right or fails to act within its 30-day limit, does Excess Land assist the owner in conducting a fair market value sale.

Excess Land must also complete action Items Nos. 1-5 listed above when properties are sold at market value and must notify escrow company about proper distribution of sales proceeds.

RESALE TIME LINE	
Step	**Time** ***(after receipt of Notice of Intent)***
1.	Buyer sends NOTICE OF INTENT.
2.	Department receives NOTICE OF INTENT.
3.	Contact owner to set appointment for inspection. (Day 4)
4.	Inspect property and complete Part I and Part II of Property Information Form.
5.	Deliver advertisement for prospective buyers delivered to local newspaper. (Day 7)
6.	Advertisement appears in local newspaper. (Days 9, 10, 11)
	NOTE: If ad does not produce prospective buyer, ad should be rerun. Time schedule through Step 7 should be adjusted accordingly.
7.	Deadline for prospective purchasers to contact the Department and set up meeting for income certification. (Day 18)
8.	Deadline for prospective purchasers to complete Income Certification. (Day 25)
9.	Complete income verifications and set up opportunities to inspect property. (Day 31)
10.	Prospective purchasers inspect property. (By Day 40)
11.	Prospective purchasers decide to purchase property. (By Day 45)
12.	Prospective purchasers sign Purchase Agreement with deposit. (By Day 50)
13.	Buyer receives NOTICE OF ACCEPTANCE from Department. (By Day 60)
14.	Buyer receives NOTICE OF ACCEPTANCE from HCD (if Department does not deliver same) - Route 2 only. (By Day 90)
15.	Sales escrow opened. (By Day 75 if not Rte. 2); (By Day 105 if Rte. 2)
16.	Sales escrow closed.

EXERCISING RIGHT TO PURCHASE		
Step	**Action**	**Explanation**
1.	Upon receipt of Notice of Intent, make arrangements to inspect the property.	The property is inspected to determine if repairs, rehabilitation, or replacements beyond the requirements of normal maintenance are necessary to put the residence into salable condition and to complete the Property Information Form, Form RW 16-25.
2.	If fix-up work is found to be necessary, estimate the cost of such work.	Notify the present owners that the required repairs must be completed prior to close of escrow and that the cost will either be deducted in escrow from their share of the sales proceeds or paid by them outside of and prior to close of escrow.
3.	Determine the current value of any substantial improvements, if such improvements had the district's prior written approval.	
4.	Determine the gross purchase price; i.e., the base price adjusted upward for any increase in county median income between the date that present owner took title to the residence and the date that delivery of the Notice of Acceptance is expected (60th day after the district receives Notice of Intent) plus the value of any approved substantial improvements.	HQ R/W shall obtain the current median household income for a family of four, which shall be determined on the basis of county median income figures published by HUD or on the basis of figures published by HCD if HUD does not publish such figures.
5.	Complete Property Improvement Form (RW 16-25).	Upon completion of Part I, have the present owner(s) sign Part II.
6.	Advertise availability of unit.	Immediately advertise in appropriate local newspapers (see Exhibit 16-EX-22). Advertisements should include the specific address of the available property and should appear in the real estate section of appropriate newspapers for at least three consecutive days.
7.	Send Notice of Affordable Housing Resale Program, Form RW 16-22, and Income Certification, Form RW 16-10, to each household that responds to the advertisement.	All Income Certifications returned by interested households shall be date-stamped upon receipt and verified by Excess Land. Households qualified on the basis of verified income and size shall be listed in order of receipt of their Income Certification.
8.	Qualify prospective purchasers.	Determine whether they are: • Interested in the geographical area where the available property is located. • In the same income category as original buyer (adjusted for family size). • Eligible for Section 235 loan assumption, where applicable. • Comparable in household size to original buyer or appropriate in household size to available property (based on number of bedrooms). In addition, Excess Land may use the services of the local housing agency or other housing entities to identify potentially interested households.

EXERCISING RIGHT TO PURCHASE (Continued)		
Step	**Action**	**Explanation**
9.	Have first three interested prospective purchasers on list inspect available property.	Within 40 calendar days from receipt of the Notice of Intent.
10.	Deliver offer letters to first three interested prospective purchasers on list and indicate their place on list (first, second, or third) based on time of the district's receipt of initial Income Certification.	Within 45 calendar days from receipt of the Notice of Intent. Inform prospective purchasers that they must return executed Purchase Agreement and $500 deposit (cashier's check or money order) within five calendar days of receipt of offer letter. Prospective purchasers must be informed and Purchase Agreement must contain a provision that offer will be withdrawn and deposit returned if higher priority prospective purchaser consummates sale.
11.	Deliver a written Notice of Acceptance, Form RW 16-26, to the current owner by personal delivery or certified mail within 60 calendar days of receipt of the Notice of Intent.	Only if bona fide deposit(s) and executed Purchase Agreement(s) are received by district within 50 calendar days of receipt of the Notice of Intent.
12.	Open a sales escrow with new buyer shown as "Department of Transportation or Assignee."	Within 15 calendar days after the Notice of Acceptance is delivered.
13.	Assist top priority buyer to obtain purchase financing.	
14.	Have new buyer execute a Right to Purchase Agreement.	
15.	Assist new buyer to obtain insurance on the property to ensure no lapse in coverage.	
16.	Monitor all escrow paperwork and assist in finalizing escrow in a timely manner by determining final gross purchase price and net purchase price, etc.	
17.	If proposed buyer does not consummate purchase in reasonable escrow period, begin escrow process with next highest priority buyer with deposit.	

16.10.15.00 Determination of Noncompliance

Excess Land shall follow the procedures listed in the table below if it determines that any of the following violations of the Right of Purchase Agreement have occurred:

- Owner has leased or subleased the property, or any part thereof, or allowed parties other than owner to live in the property without the district's prior express written consent.
- Except for purposes of repairing or maintaining the property, owner has encumbered the property or any interest therein without the district's prior express written consent.
- Owner has added a substantial improvement without the district's prior express written consent.

Action	Explanation
Attempt to have violation remedied within 60 days of determination of noncompliance.	If it is found upon closer examination that approval could have been granted pursuant to Section 16.08.09.00.D had the owner requested, Excess Land should remedy the violation by granting such approval in writing. If it is found that approval cannot be granted, Excess Land shall give the owner 60 days to rectify the situation; e.g., remove unauthorized renters/occupants or remove unauthorized substantial improvements that do not meet building codes.
Initiate procedures to repurchase property.	If upon closer examination it is found that approval could not have been granted pursuant to Section 16.10.13.00 above had the owner requested and the owner does not rectify the situation in 60 days, Excess Land shall immediately initiate the procedures set forth in Section 16.10.14.00 above, except in those instances where the violation stems from the unauthorized addition of substantial improvements that meet all building codes. Excess Land shall simultaneously advise HQ R/W that procedures are being initiated and the nature of the owner's violation that cannot be remedied.
Notify owner that gross purchase price upon resale will not include current value of unauthorized substantial improvement.	If substantial improvements are made by the owner that comply with all applicable building codes but that cannot and are not approved by the district, the owner shall be notified in writing that the gross purchase price upon resale will not be increased by the current value of such improvements; i.e., the owner will not recover either the cost or value of such improvements if they wish to sell the property while the resale controls are in force.
Require owner (initial buyer) to pay the Department the difference between the actual price paid by owner (the base price) and the fair market value of the property, as determined by the district, at the time of noncompliance plus 6% interest for the time the owner has held the property.	Only as a last resort will the Department attempt to obtain this payment since such an amount could exceed the current fair market value of the property and could be exceedingly difficult to collect in any event.

If the owner has sold, transferred, or assigned the property or any interest therein, in whole or in part, or has agreed to do so without first notifying the district in writing by certified mail (i.e., sent the district a Notice of Intent), the district shall immediately initiate the procedures set forth above.

If Excess Land determines that other violations of the Right to Purchase Agreement have occurred, it shall advise HQ R/W and take appropriate action.

16.10.16.00 Notice of Default or Notice of Sale

If the buyer defaults on the deed of trust/mortgage payments, a Notice of Default may be recorded pursuant to Civil Code Section 2924 (b) and mailed to the district. Upon receipt of a Notice of Default, Excess Land should contact the buyer and determine if the default will be resolved before a trustee's sale occurs.

If a Notice of Sale is given pursuant to Civil Code Section 2924 (f), the Notice of Sale shall constitute a Notice of Intent. Excess Land shall immediately initiate the procedures outlined above if it has a list of prospective purchasers.

If there is no list of prospective purchasers or if no household indicates a desire to purchase the residence at an affordable price after inspection of the property by prospective purchasers, Excess Land will not exercise the right to purchase and the property may be sold at trustee's sale of foreclosure or by deed in lieu of foreclosure.

NOTE: On Rescinded Route 07-LA-2 only, HCD also has a Right to Purchase that it may exercise if the Department does not.

In those instances where a trustee's sale occurs, Excess Land shall:

- Complete action Items Nos. 2, 3, and 4 listed above to ensure that Trustee distributes any surplus proceeds in the proper manner.
- Arrange with Accounting to be in a position to bid at the trustee sale to prevent a third party from obtaining title to the property for less than market value. When the district plans to bid at a trustee/foreclosure sale, a warrant can be drawn from the revolving fund. Authorization for the warrant is contained in the Accounting Manual. Use the same process as used for Bid Deposits. Instructions from Accounting will be needed to clear the warrant.
- The district must simultaneously prepare a fair market value appraisal to determine the amount to bid.

16.10.17.00 Damaged Property

If the property is damaged and the insurance proceeds are not to be used to rebuild, Excess Land shall assist buyer in selling the property at market value.

In that event or in the event of acquisition for a public use, the district shall complete action Items Nos. 2, 3, and 4 listed above to ensure that proceeds of sale are distributed by an escrow company in the proper manner.

16.10.18.00 Replacement Housing

The Relocation Assistance Branch is responsible for replacement of low- and moderate-income housing (see Chapter 10). Replacement housing, also referred to as replenishment housing, exists in Districts 4, 5, and 8.

Although the program has been discontinued, Excess Land is required to administer resale and rental rate controls in accordance with the terms of sale. HQ R/W will include this item in its Compliance Reviews.

If Excess Land disposes of a replacement housing unit for less than fair market value, it shall impose terms, conditions, and restrictions for up to 30 years:

- To assure that the housing unit will remain available and affordable to persons and families of the same income level as that of the initial occupant of the unit.
- To prevent windfall profits.

Costs of administering resale controls are charged to EA 952137, MSA Code 662.

Excess Land may authorize any public or private housing-related entity that acquires a replacement housing unit to change the rental rate of occupants not more than once annually provided the housing unit remains affordable to the same category of households (low or moderate income) as at the time of initial acquisition by the entity.

Replacement Housing units are entered in the ELMS with follow-up Code 5. These are shown in the RWM 824-Post Disposal Management Report.

NOTES:

16.11.00.00 - PORTER BILL PARK LEASES

16.11.01.00 General

CTC Resolution No. G-3 (Exhibit 16-EX-9) sets forth the general terms and conditions of the lease of excess property to local agencies for park purposes (S&H Code Section 104.15).

16.11.02.00 Determination of Qualifying Parcels

Pursuant to S&H Code Section 104.15, District Right of Way shall assist local agencies in developing park and recreational facilities on excess land where such use represents the highest and best use.

As excess parcels are certified for disposal, Excess Land shall review them for conformance with the criteria established for Section 104.15.

Excess Land should negotiate a direct sale to a local agency on any parcel with a market value of $2,500 or less since the procedures for processing a Porter Bill application are complex and expensive for both the local agency and the Department.

Taking into consideration the terms and conditions of the lease, Excess Land shall lease only those excess parcels where the fair rental value substantially equals the value of the enhancement and benefit to the State highway in preserving its view, appearance, light, air, and usefulness. The rental rate shall be determined considering the present value of the proposed construction and maintenance of park improvements, including any cost to maintain landscaping undertaken by the lessee within the State highway right of way, which would otherwise be the Department's obligation. A minimum rental fee of $100 shall be charged.

On routes involving federal participation, the following qualifying criteria are used as a guide in obtaining FHWA participation.

- The final voucher has not been submitted for the right of way project.
- The related highway facility has not been open to traffic for more than two years.
- There would be no substantial difference in Federal participation whether the parcel is incorporated in the right of way or is disposed of by public sale.
- The proposed use of the excess land would enhance the highway facility or further integrate the highway into the local environment.

16.11.03.00 Local Agency Notification

Where excess properties are economically and physically suited for park and recreational uses, local agencies shall be invited to consider such development.

Excess Land shall notify all interested local agencies, such as cities, counties, and recreational districts, of the availability of parcels. The notification should indicate that the Department intends to sell the excess land but will withhold the properties from public sale for 60 days to allow local agencies to respond.

The local agency shall be furnished with a copy of a Request for Consideration of Lease of Excess Land Pursuant to Section 104.15 (Exhibit 16-EX-10), appropriate maps of the available area, and a copy of the proposed lease (Exhibit 16-EX-11). See Exhibit 16-EX-12, Instructions on Use of Lease Format.

16.11.04.00 Request for Consideration of Lease

The local agency shall have no more than 60 days after receipt of the written notice to inform the Department of its intention to apply for use of excess lands for park purposes pursuant to Section 104.15. The local agency shall submit a Request for Consideration of Lease of Excess Land Pursuant to Section 104.15 within 120 days of notifying the Department of its intention. The local agency's request or application must be accompanied by the following:

- An 8½" x 11" or 11" x 17" preliminary development plan that includes a description of the proposed development, type of activity, location of active recreational facilities, and access routes from the State highway and the local community area. The plan should also provide a brief justification of need for the lease for park and recreational purposes.
- Estimates of construction and annual maintenance costs.
- Proposed method of financing the project.
- Time frame for development.

16.11.05.00 Fair Market Value Requirement

Excess Land shall inform the local agency that it will be required to purchase the affected property at fair market value whenever the excess parcel:

- Exceeds a depth necessary to protect the State highway, public work, or improvement and its environs or will not preserve its view, appearance, light, air, and usefulness; and

- Use of a portion of the land for park purposes, pursuant to Section 104.15, may have a detrimental effect on the market value or salability of the excess land lying beyond the depth necessary to protect the State highway, public work, or improvement and its environs or will not preserve its view, appearance, light, air, and usefulness.

Fair market value shall be based on the value of the affected property as a part of the whole parcel for its highest and best use without consideration of the effects of the proposed park.

16.11.06.00 District Investigation

Upon receiving notification from the local agency of its intention to apply for use of excess lands for purposes pursuant to Section 104.15, the district will investigate the use to which the excess property will be put and the extent to which projected use will protect such highway, public work, or improvement and its environs and will preserve its view, appearance, light, air, and usefulness.

The District Porter Bill Review Committee (consisting of District Right of Way, Landscape Architecture, and Environmental Analysis) shall conduct the investigation. If the district does not have a representative available, it should request participation through the appropriate Headquarters office. The Committee shall certify that the entire area covered by the proposed application conforms to the requirements of Section 104.15 and shall make a recommendation for Certification of Conformance, Exhibit 16-EX-13, to the DD or the DDC-R/W. Either the DD or the DDC-R/W will execute the Certificate.

16.11.07.00 Criteria

Criteria for determining the extent to which projected use will protect the highway, public work, or improvement and its environs and will preserve its value, appearance, light, air, and usefulness shall include, but not be limited to, the items in the chart on the following page.

Criteria	Explanation
Economic Uses	All economic uses of the property should be considered and a determination made that park and recreational development is economically practical and that no unreasonable revenue loss will be incurred by development as proposed.
Economic Feasibility	The measure of economic feasibility shall be where the fair rental value, taking into consideration the terms and conditions of the lease, substantially equals the value of the enhancement and benefit to the highway, public work, or improvement in preserving its view, appearance, light, air, and usefulness.
Visibility	Neither immediate access from the highway nor visibility of all portions of the parcel to be leased by highway motorists is a requirement. If any portion of the parcel is not visible, an analysis should be made of the possible benefits from developing the nonvisible portion as a park or the drawbacks from selling the parcel for development, relative to the criteria established for Section 104.15. That portion of the parcel not visible may be included in the leased area if positive benefits are expected for either the State or the local agency.
Continuous Development	Portions of the larger parcel not capable of continuous development should not be considered for lease. Continuous development could be hampered by natural or man-made obstacles, such as flood control channels, tree banks, railroad tracks, or streams.
Joinder	Joinder to other parcels with different uses or a higher and better use for independent development should be considered. A narrow strip adjoining a residential development would probably be best used by joining to the residential development if it is not of sufficient size to be used for park purposes.
Value	No portion of the parcel to be leased shall unreasonably exceed in value the present enhancement and benefit criteria applied to the larger parcel.
Recreation/Use	The proposed development may be either for active recreation or passive enjoyment. Active recreational facilities should be located or screened by planting or other means so use does not create a nuisance, distraction, or hazard to the highway user or nearby community. For example, parking areas and maintenance yards must be screened by landscaping and night lighted facilities must be located so lights do not create a distraction, glare, or hazard.
Environmental Hazards	Environmental hazards and constraints should be considered both for potential beneficial or adverse effect on park use, as well as in determining fair market value. Seismic zones • Located on fault • Near fault • Potential damage from landslides Floodplains • Likelihood of occurrence • Potential damage to wells or other improvements • Propensity to reduce capacity of flood channels • Permit required or prohibitions against development • Protection of riparian vegetation Unstable soils • Landslides or mudflows • Shrink swell characteristics • Foundation or bearing constraints • Subsidence • Erodibility Topography • Slope excessive • Access limited • Exposure to adverse weather Health and safety hazards • Dangerous areas, e.g., cliffs and crevasses • Quicksands or bog areas • Agricultural spraying • Riptides, undertows, etc. • Throwing objects on roadway • Objects thrown from roadway

Criteria	Explanation
Sensitive Areas	Environmentally sensitive areas should be considered. Wildlife habitat • Limited extent • Unique • Rare or endangered species of wildlife present • Breeding or nursery area • Essential to life cycle of certain species • Proximity to State or Federal Refuges • Protection of wetlands or other critical habitats • Value for scientific purposes (academic research) Water areas • Potential for pollution of domestic or municipal sources • Hazard to users • Value as wildlife habitat • Aesthetic considerations • Recreational uses Coastal zone or other area of unique value • Provide beach access • Equestrian, pedestrian, bicycle use potential • Aesthetic considerations Heritage resources • Historical significance • Archaeological significance • Natural landmark • Paleontological value Vegetation • Rare or endangered species • Specimen trees • Aesthetic considerations • Erosion protection • Potential commercial value • Value for scientific purposes
Sensitive Elements	Socially sensitive elements from perspective of both impact of the park on adjacent areas and the adjacent areas (including the highway) upon the park should be considered such as the following: Noise • Sensitivity of receptors • Character of neighborhood • Proposed use of park Air quality • Sensitivity of receptors • Potential for increase of pollutants due to increasing traffic Traffic • Safety • Noise and air pollution • Parking • Access • Increase on residential streets • Create barrier to circulation Storm Water Quality • Sensitivity of receptors • Potential for increase in discharge of pollutants due to site activities (e.g., litter)

16.11.08.00 District Process

Upon receipt of the Request for Consideration of Lease of Excess Land Pursuant to Section 104.15 from the interested local agency, the district will develop the items in the following table.

Item	Explanation
Fair market value appraisal	Meeting the requirements set forth in Section 16.04.00.00.
Engineering statement	Signed by appropriate district representative containing: • Age of State highway or public work. • Estimated economic life. • Planned or anticipated additional transportation requirements for adjacent or nearby facilities that could affect the planned park and a map showing such effect. The anticipated year of impact and a negative statement, if applicable, should be included. • Traffic volumes through the planned economic life of the highway facility.
Statement of anticipated reasonable annual maintenance costs	Based on the leased portion remaining in State ownership and being incorporated into the Right of Way. This should be signed by a representative of the Landscape Architecture staff.

After receiving the items listed in the table, Excess Land shall complete the Supplemental Data Sheet (Exhibit 16-EX-14).

Excess Land shall forward copies of the following documents to HQ R/W for review and submittal to the CTC:

- Local agency's request with attached preliminary development plan.
- District Certification of Conformance.
- Approved fair market value appraisal.
- Supplemental Data Sheet.
- Engineering statement.
- Maintenance cost statement.

16.11.09.00 CTC Determination

The final determination in each case rests with the CTC and can only be made after analysis of the development plans, cost, benefits, appraisal, and other factors.

If the CTC determines such park use is appropriate, Excess Land shall notify the local agency and cooperate with it in preparing detailed plans and specifications for the proposed development.

Excess Land shall immediately advise the local agency if its application is not approved. The local agency may appeal the decision.

16.11.10.00 Lease Negotiations

Excess Land shall negotiate a lease and sales contract, where appropriate, with the local agency. The property is withheld from sale for a period of one year after the CTC approves the application.

Within the one-year period, the local agency shall submit detailed plans for development of the proposed park for the District Landscape Architect's review and approval. The local agency shall also submit proof of its financial ability to commence construction of the proposed park within two years after plan approval and to complete construction within three years after plan approval.

If the local agency is unable to complete the detailed plans or negotiate a lease and sales contract within the one-year period, a 90-day extension may be granted. Excess Land shall process the parcel(s) for public sale after the 90-day extension period unless the local agency can demonstrate substantial progress towards completing the required documents.

16.11.11.00 Lease Execution

Upon approval of the detailed development plans, execution of the lease by the local agency, and preparation of Director's Deeds and sales contract, if appropriate, Excess Land shall execute the lease according to the existing delegation of authority.

After the lease is executed, Excess Land shall remove the parcels under lease from the Excess Land Inventory and transfer them into Special Account #784001 (excess land under long-term park leases).

16.11.12.00 Compliance

After the lease is executed, Excess Land is responsible to ensure that the local agency complies with the terms of the lease, including those pertaining to storm water pollution prevention. Porter Bill lease properties shall be annually inspected using the Property Management inspection forms, 11-EX-55 and 11-EX-55SW. Date of inspection must be recorded in the Right of Way Property Management System.

16.11.13.00 Lease Provisions

The standard Lease for Park and Recreational Purposes Pursuant to Section 104.15 and instructions for use of the lease can be found in Exhibits 16-EX-11 and 16-EX-12.

The terms and conditions as shown on the standard lease are applicable to all leases executed pursuant to Section 104.15. The CTC may prescribe additional terms.

16.11.14.00 Appraisal Requirement

A fair market value appraisal is required in all cases involving leases under Section 104.15. The fair market value appraisal must contain the additional data listed in the table below.

Data	Explanation
Breakdown statement of fair market value and fair rental value	For property as a whole and for areas carrying a different or higher value.
Map	Showing: • Areas of varying value. • Area of lease. • Area of the remainder. • Total area proposed for development as park and present ownership. • Unique topographic factors (such as power lines, freeways, rivers, and streets) as well as any environmental sensitivities or hazards.
Estimate of fair market value	Under the conditions of the lease and factors affecting value determination as to the area to be leased.
Fair market value of any remainder	Appraiser's rationale.

Appraisals shall use the information listed above to establish the rental rate appropriate under the terms of Section 104.15 and to determine whether or not the local agency will be required to purchase property lying beyond the area to be leased.

HQ R/W, Appraisal Office, must review and approve all appraisals prepared for properties proposed to be leased pursuant to Section 104.15.

NOTES:

16.12.00.00 - STATUTES

16.12.01.00 General

This section contains statutes referred to in this chapter that are not included in the Department of Transportation's Statutes Publication (1996).

16.12.02.00 CEQA Guidelines 15312 (14-CCR 15312)

15312. CLASS 12. SURPLUS GOVERNMENT PROPERTY SALES. Class 12 consists of sales of surplus governmental property except for parcels of land located in an area of statewide, regional, or areawide concern identified in Section 15206(b)(4).

However, even if the surplus property to be sold is located in any of those areas its sale is exempt if:

(a) The property does not have significant values for wildlife habitat or other environmental purposes, and

(b) Any of the following conditions exist:

(1) The property is of such size, shape, or inaccessibility that it is incapable of independent development or use, or

(2) The property to be sold would qualify for an exemption under any other class of categorical exemption in these guidelines, or

(3) The use of the property and adjacent property has not changed since the time of purchase by the public agency.

16.12.03.00 Government Code

§ 7073. Designation of enterprise zones; application, criterion, technical deficiencies

(a) The governing body of a city or county may, either by ordinance or resolution, propose an eligible area plus one commercial or industrial area or both within its respective jurisdiction as the geographic area for an enterprise zone. A county may propose an area within the unincorporated area as the geographic area for an enterprise zone, but shall not propose an area within an incorporated area. This proposed geographic area shall be based upon findings by the governing body that the area is a depressed area and that the designation as an enterprise zone is necessary in order to assist in attracting private sector investment in the area. The city or county shall establish definitive boundaries for the area to be included in the application for designation and, if designated by the agency, the designation shall be binding for a period of 15 years.

(b) Following the application for designation of an enterprise zone by a city or county, the governing body shall apply to the agency for designation. The agency shall adopt regulations and guidelines concerning the necessary contents of each application for designation.

(c) Any city, county, or city and county with an eligible area within its jurisdiction may complete a preliminary application. A maximum of 20 applications may be chosen each year to complete a final application.

(d) (1) From the applications received, the agency may designate by December 1991, not more than 25 enterprise zones within the state, one of which may be designated an airport enterprise zone and not more than three of which may be designated high technology enterprise zones.

(2) In the case of any existing enterprise zone or area established pursuant to Chapter 12.9 (commencing with Section 7080), or any new enterprise zone or area established pursuant to Chapter 12.9 (commencing with Section 7080) designated on or after the effective date of the act adding this paragraph, a city or county may propose that the enterprise zone or area established pursuant to Chapter 12.9 (commencing with Section 7080) within the incorporated area be expanded by 15 percent to include definitive boundaries that are contiguous to the enterprise zone or area established pursuant to Chapter 12.9 (commencing with Section 7080). The agency may approve that expansion for enterprise

zones based upon the criterion specified in subdivision (e), and for expansion of areas established pursuant to Chapter 12.9 (commencing with Section 7080), the criterion specified in Section 7082.

(e) In designated enterprise zones, the agency shall select from the applications submitted those proposed enterprise zones which, based on those applications, meet, to the extent possible, the following criterion:

Those proposed enterprise zones which, upon a comparison of all the applications submitted, indicate that they propose the most effective, innovative, and comprehensive regulatory, tax, program, and other incentives in attracting private sector investment in the zone proposed.

For purposes of this paragraph, regulatory incentives include, but are not limited to, all of the following: the suspension or relaxation of locally originated or modified building codes, zoning laws, general development plans, or rent controls; the elimination or reduction of fees for applications, permits, and local government services; and the establishment of a streamlined permit process.

Tax incentives include, but are not limited to, the elimination or reduction of construction taxes or business license taxes.

Program and other incentives may include, but are not limited to, all of the following: the provision or expansion of infrastructure; the targeting of federal block grant moneys, including small cities, education, and health and welfare block grants; the targeting of economic development grants and loan moneys, including grant and loan moneys provided by the federal Urban Development Action Grant program and the federal Economic Development Administration; the targeting of state and federal job disadvantaged and vocational education grant moneys, including moneys provided by the federal Job Partnership Training Act of 1982; the targeting of federal or state transportation grant moneys; and the targeting of federal or state low-income housing and rental assistance moneys.

In the process of designating new zones, the agency shall take into consideration the location of existing zones and make every effort to locate new zones in a manner that will not adversely affect any existing zones.

(f) In evaluating applications for designation, the agency shall ensure that applications are not disqualified solely because of technical deficiencies and shall provide applicants with an opportunity to correct the deficiencies. Applications shall be disqualified if the deficiencies are not corrected within two weeks.

(g) For purposes of this section, "high technology enterprise zone" means an enterprise zone which is intended to attract private sector investment in high technology industries and is proposed to be located in an area which would permit the association of those industries with an urban university or college.

(h) The applications and selection criteria for designation adopted pursuant to Section 7076 prior to the effective date of the act adding this subdivision shall apply to this section, as amended by the act adding this subdivision.

(i) Section 7076 shall not apply to the extent it conflicts with the provisions of the act adding this subdivision.

(j) For purposes of this section, "airport enterprise zone" means an enterprise zone intended to attract private sector investment in aviation-dependent industries, commercial aviation, and other commercial and industrial activity and which includes a rural airport located within unincorporated territory.

§ 7082. Definitions

For purposes of this chapter:

(a) "Block group" means the smallest area for which the United States Department of Commerce, Bureau of the Census, provides data on personal income.

(b) "Cluster of block groups" means one or more contiguous block groups.

(c) "Poverty level" means the poverty level, as defined by the United States Department of Commerce, Bureau of the Census, as periodically updated.

(d) "High density unemployment area" means any of the following:

(1) A metropolitan statistical area or nonmetropolitan statistical area within this state, as identified by the Department of Commerce, which contains at least 4,000 people (in the case of a metropolitan statistical area) or at least 2,500 people (in the case of a nonmetropolitan statistical area) in a cluster of block groups, each of which meets the following criteria according to the most recent available decennial census information:

(A) The average unemployment rate for the block group for the most recent 12-month period for which data are available was at least one and one-half times the average national rate of unemployment for that 12-month period.

(B) The average poverty rate for the block group for the most recent 12-month period was at least one and one-half times the average national poverty rate for that 12-month period.

(C) At least 70 percent of the household earnings for the block group for the most recent 12-month period was a maximum of 80 percent of the average state household earnings for that 12-month period.

(D) The area excludes nondistressed areas.

(2) If an area does not meet the criteria of a high density unemployment area specified above, an applicant may petition to the department for the designation based upon compliance with one or more of the following:

(A) A special census is conducted and approved by the population research unit of the Department of Finance which demonstrates compliance with paragraph (1).

(B) The applicant's jurisdiction has experienced a major economic dislocation resulting from plant closure or closure of a federal installation within the last 12 months prior to the application.

(C) The applicant's jurisdiction contains a specifically defined geographic area that meets the eligibility criteria for pockets of poverty under the United States Department of Housing and Urban Development's Urban Development Action Grant (UDAG) program as described in 24 CFR Part 570, Sections 570.466(a)(2) and (a)(3), and as periodically updated.

(D) A block group meets substantially similar criteria measuring economic distress as that measured in paragraph (1). Each census block shall meet the "substantially similar" criteria.

(E) The area consists of the entire geographic area of a community. Area boundaries shall be synonymous with the boundaries of the community. As used in this subparagraph, "community" means a subdivision of a city or county (not including a city), including a neighborhood or suburb which has distinct boundaries, is recognized as a community by the individuals residing and working within the community, and has existed prior to the program planning process. Documentation demonstrating that the area meets the definition of "community" may include a map prepared for purposes other than the program, which lists both the name and boundaries of the

community. The area shall meet the following criteria:

(i) Complies with the above definition of "community."

(ii) A minimum of 51 percent of the geographic area or population of the area meets the criteria of subparagraphs (A), (B), and (C) of paragraph (1), and the remainder of the area has substantially similar economic distress.

(3) A petition for designation of a high density unemployment area received by the agency after April 1, 1985, shall be reviewed by the agency pursuant to the criteria specified in paragraph (2).

(e) "Nondistressed area" means any block group which does not meet the definition of a high density unemployment area.

(f) One-stop service" means an efficient and expeditious method for providing services to qualified businesses.

(g) "Agency" means the Trade and Commerce Agency.

(h) "Qualified business" means any person, corporation, or other entity certified during the taxable or income year by the agency as meeting paragraphs (1) and (2).

(1) During the period of designation, the entity is engaged in the active conduct of a trade or business within the program area.

(2) Meets any of the following requirements:

(A) Has an average of at least 50 percent of its employees who are residents of a high density unemployment area.

(B) Has an average of at least 30 percent of its employees who are residents of a high density unemployment area, and has set up a community service program or a substantial equivalent as defined by regulations, or programs approved by the local government entity and the community advisory council in which the program area is located, or both.

(C) Is a business at least 30 percent owned and operated by a resident or residents of a high density unemployment area. For purposes of this subparagraph, "owned and operated" means that the resident or residents of a high density unemployment area who are owners of the business are responsible for at least 30 percent of the work performed by the business and share in at least 30 percent of the ownership, control, management responsibility, risks, and profits of the business.

For purposes of this subdivision, "a high density unemployment area" means the high density unemployment area contained in the applicant's final application to the agency if the population of that high density unemployment area is in excess of 150,000.

A business entity shall be certified prior to obtaining any benefits of a qualified business, and shall be recertified no less than every three years, as determined by the agency. The agency shall periodically audit qualified businesses for compliance with this section, and decertify any business found not in compliance. Priority shall be given to auditing qualified businesses within 18 months of the original certification of a business. A business may appeal to the secretary of the agency a decision to deny certification or recertification or a decision to

decertify, within 30 days of the decision.

Financial institutions shall not be qualified businesses.

(3) A person, corporation, or other entity shall not be a qualified business if the business uses a residential structure in a high density unemployment area for a nonresidential use, unless the structure has been unoccupied for at least one year prior to designation of the program area.

(i) "Program area" means one targeted economic development area and, where applicable, one neighborhood economic development area in the Employment and Economic Incentive Program. The term applies both to areas contained in an application for designation, and an area awarded designation. In an application containing a high density unemployment area with a population in excess of 75,000, "program area" means the targeted economic development area, the high density unemployment area, and, where applicable, the neighborhood economic development area. The benefits of the Employment and Economic Incentive Program shall only accrue to program areas after designation.

(j) "Agent" means the person or entity designated by an applicant to facilitate the operations of the Employment and Economic Incentive Program as described in subdivisions (a) and (b) of Section 7087.

(k) "Applicant" means a city, county, or city and county applying for designation under the Employment and Economic Incentive Act.

(l) "Resident" means, unless otherwise defined, a person whose principal place of residence is within a high density unemployment area and who has lived in that area for six months prior to employment by the qualified business.

(m) "Infrastructure" means the physical systems and services which support development and people, including, but not limited to, streets and highways, transit services, airports, and water and sewer systems.

(n) "Community services" means any type of emergency assistance, counseling and advice, medical care, instructional, or social services, or recreational programs and facilities furnished to individuals or groups in high density unemployment areas or program areas.

(o) "Neighborhood economic development area" means an area which meets all of the following criteria:

(1) It shall be located entirely within or contiguous to the high density unemployment area contained in the application for designation.

(2) It shall be zoned primarily commercial.

(3) Its boundary shall be continuous.

(4) It shall be of sufficient size to sustain a diverse mix of commercial businesses and its size and location shall be appropriate to reducing the economic distress within the high density unemployment area.

(5) At least a part of its area shall be within the territorial jurisdiction of the applicant. If an area for which designation is sought encompasses the territorial jurisdiction of two or more local governmental entities, all of those entities shall be a party to the application for designation, except that any one or more of those entities by resolution or ordinance may specify that it shall not participate in the application as an applicant, but shall agree to complete all actions stated within the application which apply to its jurisdiction, if the area is designated.

The area may have, but is not required to have, a history of gang-related activity whether or not crimes of violence have been committed.

No residential structure may be used for nonresidential use unless the structure has been unoccupied for at least one year prior to designation as a program area, or unless comparable

replacement housing is provided for all persons displaced in accordance with Section 33413 of the Health and Safety Code. No person shall be displaced under this section unless relocation assistance is provided pursuant to Section 33415 of the Health and Safety Code.

An agricultural area shall not be designated as a neighborhood economic development area.

(p) "Targeted economic development area" means an area which meets all of the following criteria:

(1) Its boundary shall be continuous.

(2) It shall be zoned primarily industrial or other mixed business uses.

(3) It shall be of sufficient size to sustain a diverse mix of businesses and its size and location shall be appropriate to reducing the economic distress within the high density unemployment area.

(4) At least a part of its area shall be within the territorial jurisdiction of the applicant. If an area for which designation is sought encompasses the territorial jurisdiction of two or more local governmental entities, all of those entities shall be a party to the application for designation, except that any one or more of those entities by resolution or ordinance may specify that it shall not participate in the application as an applicant, but shall agree to complete all actions stated within the application which apply to its jurisdiction, if the area is designated.

The area may have, but is not required to have, a history of gang-related activity, whether or not crimes of violence have been committed.

The area may be, but is not required to be, within a high density unemployment area. However, if the area is outside a high density unemployment area, it shall be within reasonable commuting distance of the high density unemployment area which is contained in the application for designation. If the area is outside a high density unemployment area, the applicant jurisdiction in which the area is located, in making its application, shall secure the endorsement of its application from at least one city or county which has jurisdiction within the high density unemployment area and is in close geographic proximity to the high density unemployment area.

The area may include vacant or sparsely developed parcels of land or abandoned facilities.

No residential structure may be used for nonresidential use unless the structure has been unoccupied for at least one year prior to designation as a program area, or unless comparable replacement housing is provided for all persons displaced in accordance with Section 33413 of the Health and Safety Code. No person shall be displaced under this section unless relocation assistance is provided pursuant to Section 33415 of the Health and Safety Code.

An agricultural area shall not be designated as a targeted economic development area.

(q) "Application area" means the program area and high density unemployment area contained in an application for designation.

§ 14911. Mailing lists; annual correction

Whenever any state agency maintains a mailing list of public officials or other persons to whom publications or other printed matter is sent without charge, the state agency shall correct its mailing list and verify its accuracy at least once each year. This shall be done by addressing an appropriate post card or letter to each person on the mailing list. The name of any person who does not respond to such letter or post card, or who indicates that he does not desire to receive such publications or printed matter, shall be removed from the mailing lists. The responses of those desiring to be on the

mailing list shall be retained by these agencies for one year.

§ 65854. Public hearing upon ordinance or amendment; notice.
The planning commission shall hold a public hearing on the proposed zoning ordinance or amendment to a zoning ordinance. Notice of the hearing shall be given pursuant to Section 65090 and, if the proposed ordinance or amendment to a zoning ordinance affects the permitted uses of real property, notice shall also be given pursuant to Section 65091.

§ 65856. Public hearing; exceptions

(a) Upon receipt of the recommendation of the planning commission, the legislative body shall hold a public hearing. However, if the matter under consideration is an amendment to a zoning ordinance to change property from one zone to another, and the planning commission has recommended against the adoption of such amendment, the legislative body shall not be required to take any further action on the amendment unless otherwise provided by ordinance or unless an interested party requests a hearing by filing a written request with the clerk of the legislative body within five days after the planning commission files its recommendations with the legislative body.

(b) Notice of the hearing shall be given pursuant to Section 65090.

§ 65858. Interim zoning; urgency measures

(a) Without following the procedures otherwise required prior to the adoption of a zoning ordinance, the legislative body, to protect the public safety, health and welfare, may adopt as an urgency measure an interim ordinance prohibiting any uses which may be in conflict with a contemplated general plan, specific plan, or zoning proposal which the legislative body, planning commission or the planning department is considering or studying or intends to study within a reasonable time. That urgency measure shall require a four-fifths vote of the legislative body for adoption. The interim ordinance shall be of no further force and effect 45 days from its date of adoption. After notice pursuant to Section 65090 and public hearing, the legislative body may extend the interim ordinance for 10 months and 15 days and subsequently extend the interim ordinance for one year. Any extension shall also require a four-fifths vote for adoption. Not more than two extensions may be adopted.

(b) Alternatively, an interim ordinance may be adopted by a four-fifths vote following notice pursuant to Section 65090 and public hearing, in which case it shall be of no further force and effect 45 days from its date of adoption. After notice pursuant to Section 65090 and public hearing, the legislative body may by a four-fifths vote extend the interim ordinance for 22 months and 15 days.

(c) The legislative body shall not adopt or extend any interim ordinance pursuant to this section unless the ordinance contains a finding that there is a current and immediate threat to the public health, safety, or welfare, and that the approval of additional subdivisions, use permits, variances, building permits, or any other applicable entitlement for use which is required in order to comply with a zoning ordinance would result in that threat to public health, safety, or welfare.

(d) Ten days prior to the expiration of an interim ordinance or any extension, the legislative body shall issue a written report describing the measures taken to alleviate the condition which led to the adoption of the ordinance.

(e) When an interim ordinance has been adopted, every subsequent ordinance adopted pursuant to this section, covering the whole or part of the same property, shall automatically terminate and be of no further force or effect upon the termination of the first interim ordinance or any extension of the ordinance as provided in this section.

§ 66905.5. Region

As used in this title:

"Region" includes that part of Lake Tahoe within the jurisdiction of the State of California, the adjacent parts of the Counties of El Dorado and Placer lying within the Tahoe Basin in the State of California, and that additional and adjacent part of

the County of Placer outside of the Tahoe Basin in the State of California which lies southward and eastward of a line starting at the intersection of the basin crestline and the north boundary of Section 1, thence west to the northwest corner of Section 3, thence south to the intersection of the basin crestline and the west boundary of Section 10; all sections referring to Township 15 North, Range 16 East, MDB & M. The region defined and described herein shall be as precisely delineated on official maps of the agency.

16.12.04.00 Health and Safety Code

§ 50093. Persons and families of low, moderate, and median income; definitions; filing and publication of standards and criteria

"Persons and families of low or moderate income" means persons and families whose income does not exceed 120 percent of area median income, adjusted for family size by the department in accordance with adjustment factors adopted and amended from time to time by the United States Department of Housing and Urban Development pursuant to Section 8 of the United States Housing Act of 1937. However, the agency and the department jointly, or either acting with the concurrence of the Secretary of the Business and Transportation Agency, may permit the agency to use higher income limitations in designated geographic areas of the state, upon a determination that 120 percent of the median income in the particular geographic area is too low to qualify substantial number of persons and families of low or moderate income who can afford rental or home purchase of housing financed pursuant to Part 3 (commencing with Section 50900) without subsidy.

"Persons and families of low or moderate income" includes very low income households, as defined in Section 50105 and lower income households as defined in Section 50079.5, and includes persons and families of low income, persons and families of moderate income, and middle-income families. As used in this division:

(a) "Persons and families of low income" or "persons of low income" means persons or families who are eligible for financial assistance specifically provided by a governmental agency for the benefit of occupants of housing financed pursuant to this division.

(b) "Persons and families of moderate income" or "middle-income families" means persons and families of low or moderate income whose income exceeds the income limit for lower income households.

(c) "Persons and families of median income" means persons and families whose income does not exceed the area median income, as adjusted by the department for family size in accordance with adjustment factors adopted and amended from time to time by the United States Department of Housing and Urban Development pursuant to Section 8 of the United States Housing Act of 1937.

As used in this section, "area median income" means the median family income of a geographic area of the state, as annually estimated by the United States Department of Housing and Urban Development pursuant to Section 8 of the United States Housing Act of 1937. In the event these federal determinations of area median income are discontinued, the department shall establish and publish as regulations income limits for persons and families of median income for all geographic areas of the state at 100 percent of area median income, and for persons and families of low or moderate income for all geographic areas of the state at 120 percent of area median income. These income limits shall be adjusted for family size and shall be revised annually.

For purposes of this section, the department shall file, with the Office of Administrative Law, any changes in area median income and income limits determined by the United States Department of Housing and Urban Development, together with any consequent changes in other derivative income limits determined by the department pursuant to this section. These filings shall not be subject to Article 5 (commencing with Section 11346) or Article 6 (commencing with Section 11349) of Chapter 3.5 of Part 1 of Division 3 of Title 2 of the Government Code, but shall be effective upon filing with the Office of Administrative Law and shall be published as soon as possible in the California Regulatory Code Supplement and the California Code of Regulations.

The department shall establish and publish a general definition of income, including inclusions, exclusions, and allowances, for qualifying persons under the income limits of this section and Sections 50079.5 and 50105, to be used where no other federal or state definitions of income apply. This definition need not be established by regulation.

Nothing in this division shall prevent the agency or the department from adopting separate family size adjustment factors or programmatic definitions of income to qualify households, persons, and families for programs of the agency or department, as the case may be.

16.12.05.00 Public Resources Code

§ 30103. Coastal zone; map; purpose

(a) "Coastal zone" means that land and water area of the State of California from the Oregon border to the border of the Republic of Mexico, specified on the maps identified and set forth in Section 17 of that chapter of the Statutes of the 1975-76 Regular Session enacting this division, extending seaward to the state's outer limit of jurisdiction, including all offshore islands, and extending inland generally 1,000 yards from the mean high tide line of the sea. In significant coastal estuarine, habitat, and recreational areas it extends inland to the first major ridgeline paralleling the sea or five miles from the mean high tide line of the sea, whichever is less, and in developed urban areas the zone generally extends inland less than 1,000 yards. The coastal zone does not include the area of jurisdiction of the San Francisco Bay Conservation and Development Commission, established pursuant to title 7.2 (commencing with Section 66600) of the Government Code, nor any area contiguous thereto, including any river, stream, tributary, creek, or flood control or drainage channel flowing into such area.

(b) The commission shall, within 60 days after its first meeting, prepare and adopt a detailed map, on a scale of one inch equals 24,000 inches for the coastal zone and shall file a copy of the map with the county clerk of each coastal county. The purpose of this provision is to provide greater detail than is provided by the maps identified in Section 17 of that chapter of the Statutes of the 1975-76 Regular Session enacting this division. The commission may adjust the inland boundary of the coastal zone the minimum landward distance necessary up to a maximum of 100 yards except as otherwise provided in this subdivision, or the minimum distance seaward necessary up to a maximum of 200 yards, to avoid bisecting any single lot or parcel or to conform it to readily identifiable natural or manmade features. Where a landward adjustment is requested by the local government and agreed to by the property owner, the maximum distance shall be 200 yards.

16.12.06.00 Streets and Highways Code

§ 30410. Disposition of property no longer necessary for use.

Whenever any property acquired for any of the purposes of this chapter, whether by agreement, grant, or eminent domain, either in fee or in any lesser estate or interest, is no longer necessary for use in connection with any improvement authorized to be constructed pursuant to this chapter, or whenever a lesser interest than is owned therein is sufficient for the construction, maintenance, and operation of any improvement, or whenever it is for any other reason in the public interest to do so, the property, any part thereof, or any interest therin may be leased, sold, exchanged, or otherwise disposed of or dealt with by the director in the manner, upon such terms, and subject to such reservations as are first approved by the commission.

NOTES:

CHAPTER 16

Excess Land
Table of Contents

FORMS

Form No.	Title
RW 16-1	Excess Land Parcel Acquisition/Disposal Summary
RW 16-2	Analysis of Cost With Adjustments to Inventory Value
RW 16-3	Application to Hold Excess Land
RW 16-4	Reserved for Notice of Surplus Real Estate Sale
RW 16-5	Hold for Future Use
RW 16-6	Hold for Future Use
RW 16-7	Rescinded Route Parcel Inventory
RW 16-8	Excess Land Transaction Resumé (To be issued by 08/01/2002)
RW 16-9	Agreement for the Purchase of Real Property (Sale to Present Occupants) [SB 86]
RW 16-10	Income Certification [SB 86]
RW 16-11	Affordable Sales Price Calculations-Alternative A (Lower Income Households) [SB 86]
RW 16-12	Affordable Sales Price Calculations-Alternative B [SB 86]
RW 16-13	Right to Purchase Agreement Between Caltrans and Buyer [SB 86]
RW 16-14	Request for Proposal Department of Transportation Disposal of __ Properties [SB 86]
RW 16-15	Agreement for the Purchase of Real Property (Sale to Housing Entity) [SB 86]
RW 16-16	Note and Agreement Secured by a Deed of Trust [SB 86]
RW 16-17	Deed of Trust [SB 86]
RW 16-18	Assumption Agreement [SB 86]
RW 16-19	Subordination Agreement - Form A [SB 86]
RW 16-20	Request for Notices of Default and Sale [SB 86]
RW 16-21	Owner-Occupant Certification [SB 86]
RW 16-22	Notice of Affordable Housing Resale Program [SB 86]
RW 16-23	Annual Certification of Ownership Conditions [SB 86]
RW 16-24	Notice of Intent [SB 86]
RW 16-25	Property Information Form [SB 86]
RW 16-26	Notice of Acceptance [SB 86]
RW 16-27	Notice of Abandonment of Right to Purchase [SB 86]
RW 16-28	Excess Land Inventory Memorandum
RW 16-29	Excess Land Fiscal Transmittal

EXCESS LAND PARCEL ACQUISITION/DISPOSAL SUMMARY

RW 16-1 (New 3/96)

DISPOSAL UNIT (Director's Deed)				
☐ PARCEL ACQUISITION (COMPLETE I, II, III)				
☐ ONE PARCEL DU (COMPLETE IV, V, & VI-A)				
☐ DU WITH _____PCLS (IV, V ONLY & VI-B)				

Dist ____ Co ____ Rte ____ KP (P.M.) ____ Parcel No ____

Project Limit ____ Map No. ____

I. EXCESS LAND PARCEL ACQUISITION DATA

Grantor			AR#	Schedule Number (New Parcel)
Deed Recorded	Post Acquisition Date	Interest Acquired	Parcel Type: ☐ INVENTORY ☐ NON-INV MEASURE CODE:	

EXCESS CREATED BY:
- ☐ New Acquisition
- ☐ Design Change
- ☐ Decert of R/W--FHWA approved date _____
- ☐ Decert of Operating Property from _____
- ☐ Rescinded Route _____
- ☐ Parcel Split
- ☐ Option Cancelled
- ☐ Foreclosed Parcel

II. PRORATA COST OF EXCESS PARCEL

Land	Improvement	Other	Total
$	$	$	$

III. EXCESS LAND INVENTORY VALUE - VALUE AT ACQUISITION (VTA) (From Federal Participation Memo)

Area	Unit-Value	Land Value	Improvement Value	Total
Measure	$	$	$	$

IV. DISPOSAL DATA

(For Multiple Parcel Disposal Unit - Leave I, II, III, Above Blank - Attach VI-B)

Clearance Requested	Clearance Obtained	Appraisal Requested	Appraisal Approved	Interest Valued

Excess Land Valuation:	Land Value	Improvement Value	Total
☐ Market Value Appraisal ☐ Public Sale Estimate	$	$	$

- ☐ Does Not Qualify for Use By Other State Agencies
- ☐ Qualifies-–General Services Notified–No Reply or Waiver Received
- ☐ Government Code 54220, et seq. Complied With–No Replies

Access (Will–Will Not) be Restricted Along

Mineral Rights (Will–Will Not) be Reserved

Description of Property (Improvement, Zoning, etc.)

Deed approval delegated to district? ☐ Yes, ☐ No. If yes, deed executed on: _____

V. SALES DATA

Convey To:	Sales Price
	$

Bill No.	Interest Sold	Date of Sale	DD To HQ	CTC Approval	DD Recorded

(Reason for Sale Below Appraised Value) Approved by HQ _____

RECOMMENDED FOR APPROVAL:

_____
R/W Agent

_____ _____
Senior R/W Agent Date

I have personally reviewed the Appraisal Report or Excess Parcel Disposal Value Estimate for the above excess property and authorize the sale of said property:

- ☐ To be submitted to the CTC for approval.
- ☐ Under CTC delegation (Resolution #G-95-07 amending #G-2)

_____ _____
District Division Chief, Right of Way Date

EXCESS LAND PARCEL ACQUISITION/DISPOSAL SUMMARY (Cont.)

RW 16-1 (New 3/96)

V. SALES DATA (Cont.)

BY: ☐ PUBLIC ☐ PRIVATE (Adjoining Owners) | Minimum Bid $ | No. of Active Bidders:

☐ DIRECT ☐ Private Party ☐ Government Agency ☐ Finding "A" ☐ Finding "B" (Meets Criteria of CTC Resolution G-2)

☐ Excess Incapable of Independent Development Because:

☐ Excess will increase value of adjoining _____ zoned property in the amount of $ _____ utilized as _____

☐ Highest price obtainable of $ _____ has been received

☐ Waivers obtained from _____ adjoining owners ☐ Grantee is only adjoining owner

OTHER DISPOSAL:

☐ INCORPORATED - R/W

☐ INCORPORATED - OPERATING PROPERTY

☐ EXCHANGE

☐ UTILITY AGREEMENT

☐ CO-OP AGREEMENT

☐ TRANSFER OF CONTROL AND POSSESSION

☐ OTHER (Explain In "Remarks")

FINANCING: ☐ CASH ☐ INFORMAL TIME PAYMENT ☐ CREDIT FOR __ YEARS ☐ NO MONETARY CONSIDERATION

Statement for Utilities Agreements

☐	No monetary consideration. Conveyance of easement is 100% State obligation pursuant to utilities agreement.
☐	Amount received is company's share of_____% of the appraised value of the easement pursuant to utilities agreement.
☐	Amount received represents appraised value of easement.

Summary for Exchanges Only

Acquired Parcel No.: _____

R/W Contract Date: _____

Expend Auth (9, H) _____

R/W: Attach R/W Contract, Memo of Settlement and Federal Participation Memorandum

FMV of Parcel Given in Exchange $_____

Add "Cash To Grantor" (+) $_____

Subtract "Cash to State" (-) $_____

Total Cost of Parcel Acquired (Include interest) $_____

Accounting: Use Exchange Worksheet to determine required entries.

REMARKS:

VI-A FEDERAL PARTICIPATION STATUS (Single Parcel Disposal Unit Only - For Multiple Parcels attach VI-B)

Federal Aid Project Number | FHWA Exempt Sale ☐ Yes ☐ No

(1) Excess Land Parcel Number	(2) Expenditure Authorization (9,H)	(3) Federal Aid Expires	(4) Federal Partic. (Y,N)	(5) VTA - Value at time of Acquisition	(6) Acquisition Cost of Excess (Pro-rata Cost)	(7) Sales Price of Excess/ FMV, if exchanged
				$	$	$

EA & Fed Aid No. Reviewed by

_____ _____

R/W Planning and Management Date

Entry into TRAMS per Accounting Report ☐Yes ☐No

_____

Date

(8) Credit Due Fed	(9) Severance Damages Due State
$	$

Accounting Service Center Use Only -- Accounting Entry Instruction

(5 Deletion of VTA: Use T- Code 900

(8) Sale of Excess Land: Use T-Code 194
Exchange of Excess Land: Use T-Code 194 with T-Code 142. Also use T-Code 199
If credit due, use object code 6086. If no credit due, use object code 7086

(9) Recording Severance Damages: Two entries required.
For entry #1 use T-Code 243 and object code 6006. For entry #2 use T-Code 243R and object code 7006.

EXCESS LAND PARCEL ACQUISITION/DISPOSAL SUMMARY (Cont.)

RW 16-1A (New 3/96)

DISPOSAL UNIT (Director's Deed)				

VI-B FEDERAL PARTICIPATION STATUS (For _____ Parcels)

Federal Aid Project Number				Total Sales (7) ÷ By Total Costs (6) = ____ . _____			FHWA Exempt Sale ☐ Yes ☐ No	
(1) Excess Land Parcel Number	(2) Expenditure Authorization (9, H)	(3) Fed Aid Expires	(4) Fed Partic? (Y, N)	(5) VTA - Value at Time of Acquisition	(6) Acquisition Cost of Excess (Pro-rata Cost)	(7) Sales Price of Excess/ FMV if exchanged	(8) Credit Due Fed	(9) Severance Damages Due State
1.				$	$	$	$	$
2.								
3.								
4.								
5.								
6.								
7.								
8.								
9.								
10.								
11.								
12.								
13.								
14.								
15.								
16.								
17.								
18.								
19.								
20.								
TOTAL - THIS PAGE				$	$	$	$	$
TOTAL - ALL PAGES				$	$	$	$	$

Accounting Service Center Use Only -- Accounting Entry Instruction:

(5) Deletion of VTA: Use T-Code 900
(8) Sale of Excess Land: Use T-Code 194
Exchange of Excess Land: Use T-Code 194 with T- Code 142. Also use T-Code 199.
If credit due, use object code 6086. If no credit due, use object code 7086
(9) Recording Severance Damages: Two entries required.
For entry #1 use T-code 243 and object code 6006. For entry #2 use T-code 243R and object code 7006.

EXCESS LAND PARCEL ACQUISITION/DISPOSAL SUMMARY

PURPOSE:

To summarize the entire history of each excess parcel, inventory or non-inventory, in the Excess Land Management System (ELMS) from the time of acquisition or "post acquisition" creation until sold or otherwise disposed. This form is used to summarize:

1. **Acquisition data for each excess parcel** in ELMS and
2. **Disposal data at the time of sale/disposal for either**
   (a) **a single parcel disposal unit** (DU) on the same form or,
   (b) **a multiple parcel disposal unit** using a clean RW 16-1 and attaching part VI-B to give parcel detail for the DU.

ACQUISITION DATA ON RW 16-1

A. NEW ACQUISITION OF AN EXCESS PARCEL

Preparation: Acquisition staff at parcel (MOS) settlement.

1. Complete the top of the form. Place an "X" in the box by "Parcel Acquisition" and created by "New Acquisition".
2. Complete parts I, II and III only. In part I leave the "Post Acquisition Date" and the "Parcel Type" spaces blank. In part III, VTA source is the "Federal Participation Memo".
3. **Forward the RW 16-1 to the Excess Land Manager** who completes Part I - "Parcel Type" and "Measure Code" if applicable.

B. "POST-ACQUISITION" CREATION OF EXCESS PARCELS

Preparation: Excess Land staff at the time excess parcel created.

1. Complete the top of the form. Place an "X" by "Parcel Acquisition" and by the appropriate choice in "Excess Created By" (except "New Acquisition" - see "A1" above).
2. Complete parts I (except "AR" & "Schedule No."), II and III.

C. VERIFY EXCESS PARCEL DATA IN ELM SYSTEM

Responsibility: Excess Land when RW 16-1 prepared or received.

DISPOSAL DATA ON RW 16-1

Preparation: Excess Land staff at the time of sale/disposal.

A. SINGLE PARCEL DISPOSAL UNIT (DU)

1. **Enter an "X" by "One Parcel DU"** on top of the **same RW 16-1** which has parts I, II & III already completed.
2. **Complete parts IV and V**. In part IV, deed approval is delegated to the district if the market (appraised) value is $15,000 or less. See G-2, amended by G-95-07, for criteria. In part V, enter the Accounting "Bill Number" as reference.
3. **Complete part VI-A. Enter EA (9,H) and Federal Aid number** under which property acquired for right of way. (Enter "N/A" if no Federal Aid number incolved).
   (a) **For "FHWA Exempt Sale"** (sales amount $15,000 or less), enter an "X" by "Yes". Leave blank both "Credit Due Fed" and "Severance Damages Due State".
   (b) **For "Sale Subject to FHWA Credit",** (Sales over $15,000) enter an "X" by "No". Please refer to explanation under C-5 and C-6 on the next page.

B. MULTI-PARCEL DISPOSAL UNIT (DU)

1. **Prepare a new 16-1 form**. On top of form, enter "X" only by "DU With ____ Parcels". Leave the parcel number blank; parcel numbers are entered on part VI-B (below).
2. **Leave parts I, II and III blank.**
3. **Complete parts IV and V.** In part IV, the deed approval is delegated to the district if the market (appraised) value is $15,000 or less. See G-2, amended by G-95-07, for criteria. In part V, enter the Accounting "Bill Number" as reference.

C. ATTACH PART VI-B FOR MULTI-PARCEL DU (In Lieu of Part VI-A)

1. **Enter Disposal Unit number and number of parcels;**
2. **Enter the Federal Aid Project Number** under which property acquired for right of way. (Enter "N/A" if no Fed number). For more than one Federal Aid number, use separate lines or pages to group parcels under each number (including "N/A").
3. **For "FHWA Exempt Sale"** (DU sales amount is $15,000 or less), enter an "X" by "Yes". Leave blank columns 8 and 9.
4. **List each parcel number in the disposal unit** and complete colunms 2 through 7. Allocate "sales price" (column 7) to each parcel by multiplying each "pro-rata cost" (column 6) by this factor: "total sales" divided by "total pro-rata cost" for the DU. Verify parcel sales detail equals DU total.
5. **Complete "Credit Due Fed" for an excess parcel only if:**
   (a) the sale is not FHWA exempt (sales price exceeds $15,000)
   (b) there is an applicable "Federal Aid Project Number" and
   (c) the parcel is "Federal Participating" ("Y" entered).
   If so, "Credit Due Fed" equals "Sales Price" for the parcel.
6. **Complete "Severance Damages Due State" for a parcel only if**:
   (a) the sale is not FHWA exempt (sales price exceeds $15,000)
   (b) there is an applicable "Federal Aid Project Number",
   (c) the parcel is not Federal Participating ("N" entered) and
   (d) the parcel sales price is less than "pro-rata cost".
   "Severance Damages Due State" is the amount of the loss

D. VERIFY DISPOSAL DATA IN ELM SYSTEM (at sale & at close of escrow)

APPROVAL OF THE RW 16-1

A. "RECOMMENDED FOR APPROVAL"

1. After preparing Sales/Option Agreement, Excess Land R/W Agent signs the 16-1; then supervisor reviews, signs and dates 16-1.
2. The District Division Chief-R/W (or Designate) checks the appropriate delegation box; then signs and dates the 16-1.

B. "FEDERAL PARTICIPATION STATUS" (Part VI-A or VI-B of the 16-1)

1. After above approval, Excess Land "package" submitted for either CTC or delegated approval. 16-1 copy also sent to Planning & management who validate EA and Federal Aid number.
2. **After close of excrow**, 16-1 sent to ASC who verify credits, severance damages, and enter into TRAMS. ASC returns 16-1 to Excess Land staff with evidence of accounting entries.

ANALYSIS OF COST WITH ADJUSTMENTS TO INVENTORY VALUE

PLANNING & MANAGEMENT TO COMPLETE THE FOLLOWING:

1. STATE'S CAPITAL COSTS (from Memorandum of Settlement)
   - a. Right of way - Fee _____
   - b. Excess Land _____
   - c. Underlying Fee, Easements, and/or Permit Areas _____
   - d. Prepaid Bond Assessments _____

     TOTAL LAND COST _____
   - e. Improvements _____
   - f. Equipment & Personalty _____

     TOTAL IMPROVEMENTS & PERSONALTY _____
   - g. Damages (+) _____
   - h. Benefits (–) _____

     NET DAMAGES _____

   TOTAL CONSIDERATION TO GRANTOR & SUBORDINATE INTERESTS _____

EXCESS LANDS TO COMPLETE 2 & 3:

2. ADJUSTMENTS TO COST (–)
   - a. Land Disposed of or Used for R/W _____
   - b. Underlying Fee, Easements, and/or Permit Areas (non-inventory item) _____
   - c. Refunds on Bond Assessments _____

     TOTAL LAND ADJUSTMENT _____
   - d. Improvements Removed or Destroyed _____
   - e. Equipment & Personalty (non-inventory item) _____

     TOTAL IMPROVEMENTS & PERSONALTY ADJUSTMENT _____
   - f. Net Damages (non-inventory item) _____

   TOTAL ADJUSTMENTS _____
3. COST OF EXCESS PARCEL* = VTA
   - a. Land _____
   - b. Improvements _____

   TOTAL VTA _____

* Any additional adjustments, if needed, should be made after parcel is inventoried (i.e., inclusion in assessment district by special legislation-add cost to land value: capital improvements-add to improvement value).

APPLICATION TO HOLD EXCESS LAND

RW 16-3 (Rev. 3/96)

DIRECTOR'S DEED NO.	DIST	CO	RTE	POST.

PARCEL NO.(S)	PRESENT CATEGORY	HOLD CATEGORY
	RELEASE DATE	$ APPRAISED VALUE
	SIZE	$ VTA

SPECIFIC INFORMATION REQUIRED FOR EACH HOLD CATEGORY (SEE PAGE 2): NARRATIVE REMARKS BY THE REQUESTING DEPARTMENT JUSTIFYING THE HOLD: (USE ATTACHMENT IF MORE SPACE IS REQUIRED)

REQUESTING DEPT. SUPERVISOR	DESIGN EXP AUTH.	R/W CERT. DATE

STIP OR PSTIP NO.	APPROVAL DATE	ESTIMATED DATE ESTABLISH NEW R/W LINE

APPROVAL OR RECOMMENDED FOR APPROVAL	PSR APPROVAL DATE

DISTRICT DIVISION CHIEF RIGHT OF WAY	DATE
DISTRICT PROPERTY RETENTION REVIEW COMMITTEE CHAIRPERSON	DATE

APPROVED

DISTRICT DIRECTOR	DATE

APPLICATION TO HOLD EXCESS LAND (Cont.)

Category 2A Engineering Hold

VTA and market value.
Design E.A. and project limits (not required if held for operational purposes only). If held for another project, need date Phase 9 E.A. will be funded.
STIP identification and date or PSR approval date (not required if held for operational purposes only).
Narrative justification of the hold signed by the engineer making the request.
Parcel map (strip map if several parcels on one project) showing parcels in sufficient detail to locate them on the ground.
Approval of Chairperson of District Property Retention Review Committee.

Category 2B Public Agency Hold

Date of original hold.
Agency held for and why.
Date funds available.
Narrative support for reason (other than funds not available).

Category 2C Administrative Legal Hold

VTA and market value (if project involving several parcels is subject of hold, use aggregate VTA and market value).
Reason for hold.
Attach supporting correspondence from department requesting hold; e.g., RAP, Legal, etc.
Attach strip map showing the general loction in sufficient detail that the excess can be located on the ground.
If held for “optimum return” or exchange include: Economic justification (except for hold requests for exchange), and.
attach a map showing Disposal Unit (DU).

Category 2D Environmental Hold

VTA and market value.
Reason for the hold

RESCINDED ROUTE PARCEL INVENTORY

RW 16-7 (9/94)

Right of Way Engineering to complete the following:

A. Dist. _____ Co. _____ Rte. _____ P.M. _____

E.A. _____

Parcel No. _____

Appraisal Report No. _____

Date of Acquisition _____

Grantor _____

Date of C.T.C. Authorization to Dispose of right of way _____

B. State's acquisition made by:

[ ] Right of Way Contract and Grant Deed [ ] Final Order

[ ] Full Take [ ] Part Take

C. Deed clauses:

[ ] None

1.

2.

3.

D. Area _____ sq. ft., acres.

E. Type of access to property:

1. [ ] Fronts on public street

2. [ ] Easement access to public street

3. [ ] Landlocked

Property Management to complete the following:

G. [ ] Unimproved property: Tenant

[ ] Unrented [ ] Rented Rental Rate _____ Account # _____

RESCINDED ROUTE PARCEL INVENTORY (Cont.)

RW 16-7 (9/94)

H. [ ] Improved property

1. Type of improvements:

[ ] Single-family residence [ ] Mobile home [ ] Advertising Sign

[ ] Duplex [ ] Triplex [ ] Fourplex

[ ] Apartment house or other multiple containing _____ units

[ ] Office Building [ ] Industrial [ ] Commercial [ ] S&H Code Sec. 118.1 [ ] Franchise

[ ] Unrented [ ] Rented Tenant Account # _____

a. Rental rate per month $ _____ Date of Occupancy _____

b. [ ] Grantor tenant

c. [ ] Inherited tenant

d. [ ] Rerent

e. [ ] Master Tenancy Agreement

2. If residential, state the names of each head of household, addresses and number in household. If non-residential, state name and address of occupant.

Planning and Management to complete the following:

1. State's capital costs: (Excluding RAP & Property Management)

1. Land _____
2. Improvements _____
3. Damages _____
4. Benefits _____
5. Total consideration to grantor and subordinate interests, if any (include value of land exchanges) _____

RESCINDED ROUTE PARCEL INVENTORY (Cont.)

RW 16-7 (9/94)

J. Federal Involvement: [ ] None [ ] FAAF [ ] Interstate

[ ] Project No. _____ [ ] Other (specify)

Amount $ _____

K. Section 118.5

[ ] Property will be subject to taxes under Section 118.5

[ ] Property is not subject to taxes under Section 118.5

1. [ ] Parcel was not acquired by F.O.C.
2. [ ] A portion of this parcel has been used for one of the purposes specified under Section 104 of the Streets and Highways Code.
3. [ ] This parcel will not be offered at public sale.

AGREEMENT FOR THE PURCHASE OF REAL PROPERTY (SALE TO PRESENT OCCUPANTS)

RW 16-9 (9/94)

Dist.-Co.-Rte. _____
Director's Deed No.: _____
Buyer: _____
_____
Date: _____

This Agreement is entered into between the State of California (Department of Transportation; hereinafter called "SELLER") and the undersigned purchaser (hereinafter called "BUYER") for the purchase of certain real property.

It Is Hereby Agreed As Follows:

1. SELLER agrees to sell to BUYER and BUYER agrees to purchase from SELLER upon the terms and for the consideration set forth in this Agreement, all that certain real property situated in the City of _____ County of _____, State of California and legally described as follows:

   also known as: _____
   _____
   (Street Address)

   It is understood and agreed that the real property conveyed shall include all building fixtures, equipment and appliances which are part of the above-described real property.
2. *Consideration:*
   BUYER will place into escrow a good faith deposit of: $_____
   Estimated Proceeds of Loan to be obtained by BUYER: $_____
   Estimated Affordable Sales Price: $_____
   (a) The Estimated Affordable Sales Price is based upon the formula set out on the attached *Affordable Sales Price Calculation* form. The Final Affordable Sales Price will be determined just prior to the close of escrow and BUYER agrees to pay the Final Affordable Sales Price for the property.
   (b) BUYER understands that the Final Affordable Sales Price and terms are based upon all of BUYER'S income, as reported on Income Certification, and that if all of BUYER'S income has not been accurately reported, SELLER, at its election, may rescind this Agreement and recover title to and possession of the real property or sue for damages. All costs, expenses and legal fees are to be payable by BUYER.
   (c) If no adjustments are required, the Estimated Affordable Sales Price will be the Final Affordable Sales Price.
   (d) Prior to the close of escrow, BUYER will deposit into escrow, or cause to be deposited into escrow, all funds and/or documents required from BUYER to enable escrow to close. SELLER agrees to deposit with the Escrow Agent a Director's Deed conveying the real property to BUYER, together with such other instruments as are necessary.
3. Title to the property shall be vested: _____
   _____.
4. Conveyance by SELLER shall be all of its right, title and interest in the property to be sold, subject to all exceptions and reservations whether or not of record and a *Right to Purchase Agreement Between Caltrans and Buyer*, signed and recorded concurrent with the deed in this transaction. Agreement is, by reference herein, made a part of this Agreement, and has been read and is hereby approved by the undersigned.
5. BUYER will procure, at BUYER'S expense, new fire insurance coverage in an amount and type satisfactory to SELLER and which meets the provisions of the *Right to Purchase Agreement*, Proof of said coverage will be deposited with SELLER.

AGREEMENT FOR THE PURCHASE OF REAL PROPERTY (SALE TO PRESENT OCCUPANTS) (Cont.)

RW 16-9 (9/94)

6. Escrow fees, charges, and costs shall be paid by BUYER and SELLER in accordance with local custom. It is expressly understood and agreed, however, that the cost of such fees, charges and costs to SELLER may not reduce the net proceeds received by SELLER from this sale to an amount less than $_____ which is the original acquisition price paid by SELLER.
7. BUYER acknowledges that the subject property has been removed from the Assessed Property rolls in the County of _____ BUYER further acknowledges full responsibility for the payment of all property taxes and assessments accruing after the close of escrow.
8. This Agreement, on behalf of the SELLER, is subject to approval by the California Transportation Commission.
9. SELLER will fund repairs required by lenders and if a government housing assistance program is used, repairs required by such program. Notwithstanding the provision of paragraph 6 above, the proceeds to SELLER may be reduced by the amount of money required for such repairs.
10. (Use only where repair costs exceed SELLER'S acquisition price *and* repairs to occur after Deed recorded.) Since the cost of repairs in this sale will exceed the BUYER'S Estimated Affordable Sales Price, SELLER will deposit into escrow, upon demand of the Escrow Agent, the amount of $_____ in order to complete the sale in accordance with the terms of this Agreement.
11. Any amendment of, or supplement to, this Agreement must be in writing and approved in writing by both BUYER and SELLER.
12. Should BUYER decide, unilaterally, to cancel this Agreement, BUYER'S "good faith deposit" will be returned, but not before BUYER'S account is debited for all appropriate cancellation fees and charges for services rendered to that point. Should BUYER and SELLER both agree to cancel this Agreement, such charges and fees will be apportioned in accordance with paragraph six (6) of this Agreement.
13. This Agreement contains the entire agreement between the parties and neither party relies upon any warranty or representation not contained in this Agreement.
14. Mailing address of BUYER:

15. Mailing address of SELLER:

IN WITNESS WHEREOF, the parties have executed this Agreement the day and year first above written.

_____	_____
_____	_____
_____	_____
_____	_____

STATE OF CALIFORNIA • DEPARTMENT OF TRANSPORTATION

INCOME CERTIFICATION

RW 16-10 (9/94)

PERSONAL INFORMATION NOTICE

Pursuant to the Federal Privacy Act (P.L. 93-579) and the Information Practices Act of 1977 (Civil Code Sections 1798, et seq.), notice is hereby given for the request of personal information by this form. The requested personal information is voluntary. The principal purpose of the voluntary information is to facilitate the processing of this form. The failure to provide all or any part of the requested information may delay processing of this form. No disclosure of personal information will be made unless permissible under Article 6, Section 1798.24 of the IPA of 1977. Each individual has the right upon request and proper identification, to inspect all personal information in any record maintained on the individual by an identifying particular. Direct any inquiries on information maintenance to your IPA Office.

TO: STATE OF CALIFORNIA
DEPARTMENT OF TRANSPORTATION

DIST ____ CO ____ RTE ____ KP(P.M.) ____ EA NO.

PROJECT ____ SAR NO.

PARCEL NO. OR RENTAL ACCT. NO. ____ RENTAL DATE

1. FULL NAME OF APPLICANTS
2. HOME PHONE NO.
3. DATE OF INITIAL OCCUPANCY
4. ADDRESS OF APPLICANT'S RESIDENCE
5. APPLICANT'S OCCUPATION
6. CO-APPLICANT'S OCCUPATION
7. APPLICANT'S EMPLOYER AND ADDRESS
   ZIP ____ PHONE NO. ____
   APPLICANTS SOCIAL SECURITY NO. ____
8. CO-APPLICANT'S EMPLOYER AND ADDRESS
   ZIP ____ PHONE NO. ____
   CO-APPLICANTS SOCIAL SECURITY NO. ____

9. HOUSEHOLD COMPOSITION AND INCOME

NAME	RELATIONSHIP	GROSS WAGES OR SALARY	RETIREMENT		BENEFITS PAYMENT			TOTAL LAST 12 MONTHS (SUM OF ALL ENTRIES)	EXPECTED INCOME NEXT 12 MONTHS	CALTRANS REVIEW
			SOCIAL SECURITY	OTHER	DISABILITY	UNEM-PLOYMENT	PUBLIC ASSISTANCE			
	9. TOTAL							(A)	(B)	

NOTE: Exclude income but not names of minors (children under 21 years of age or full-time students that live at home).

10. OTHER INCOME

	TOTAL LAST 12 MONTHS	EXPECTED INCOME NEXT 12 MONTHS
(A) GROSS OVERTIME PAY, COMMISSIONS, FEES, TIPS AND BONUSES		
(B) NET INCOME FROM OPERATION OF A BUSINESS OR PROFESSION		
(C) PERIODIC PAYMENTS FROM ANNUITIES, INSURANCE POLICIES, PENSION OR DEATH BENEFITS		
(D) ALIMONY AND CHILD SUPPORT		
(E) WORKERS' COMPENSATION		
(F) MILITARY PAY (INCLUDING REGULAR, RESERVE, SPECIAL PAY AND/OR ALLOWANCES		
(G) VETERAN PAYMENTS OR BENEFITS		
(H) OTHER		
(I) TOTAL 10 (A) THROUGH 10 (H)		(I)

11. ACTUAL INCOME ON ASSETS (LAST 12 MONTHS)

(1) INTEREST AND DIVIDENDS ____
(2) NET INCOME FROM RENTAL OF REAL OR PERSONAL PROPERTY ____
(3) NET INCOME FROM OTHER CAPITAL INVESTMENTS ____

TOTAL ACTUAL INCOME FROM ASSETS (A) ____

LIABILITIES

	MONTHLY PAYMENT	UNPAID BAL.
AUTOMOBILE		
DEBTS, OTHER REAL ESTATE.....		
LIFE INSURANCE LOANS		
NOTES PAYABLE		
CREDIT UNION.....		
RETAIL ACCOUNTS.....		
NAME ACCOUNT NO.		
TOTAL	$	$

IF MORE SPACE IS NEEDED, ATTACH SCHEDULE)

12. TOTAL ANNUAL INCOME
(A) ENTER TOTAL FROM LINE 9(B) ____
(B) ENTER TOTAL FROM LINE 10(I) ____
(C) ENTER TOTAL FROM LINE 11(A) ____
(D) TOTAL ANNUAL INCOME ____

13. TOTAL MONTHLY GROSS INCOME

LINE 12(D) + 12 = $

I (We) certify, under the penalties of perjury, that our average monthly gross income, including salaries, wages, tips, commissions, rents, royalties, dividends, interest, profits, pensions and annuities, irrespective of expenses and voluntary or involuntary deductions, is correctly stated above. I (We) understand that the information may be used in connection with a surplus residential property disposal project. I (We) understand that inquiries may be made by Caltrans to verify the statements herein. I (We) do hereby give Caltrans permission to provide information as to the composition of our household and our total monthly gross income (Item 13 above) to prospective purchasers (housing-related entities) for use in projecting affordable rental income.

APPLICANT'S SIGNATURE AND DATE

CO-APPLICANT'S SIGNATURE AND DATE

NAME OF CALTRANS INTERVIEWER AND DATE OF INTERVIEW

(SEE REVERSE SIDE)

INCOME CERTIFICATION (Cont.)

RW 16-10 (9/94)

PRESCRIBED NOTICE TO
ACCOMPANY REQUEST
FOR PERSONAL INFORMATION

The applicant, whose signature appears on the reverse, understands this information is being collected by the California Department of Transportation.

The California Information Practices Act of 1977 requires that all persons be informed of the purposes and uses to be made of information solicited. The following is furnished to explain the reason why the information is requested and the general uses to which that information may be utilized.

AUTHORITY: The Department is authorized to request information under the authority of Government Code Section 54237 of the State of California.

PURPOSE: The information requested is considered relevant and necessary to determine entitlement to the benefit for which you are applying.

USES: The information will be used in your best interest in determining eligibility to the maximum benefits allowable by law. Information as to the composition of applicants' household and applicants' total monthly gross income may be provided to prospective purchasers (housing-related entities) for use in projecting affordable rental income.

EFFECTS OF NOT PROVIDING INFORMATION: Disclosure of the information is mandatory if the present occupants desire to purchase the single family residence in which they reside for an affordable price which is less than fair market value pursuant to Government Code Sections 54235, et seq. If you fail to respond, the Department will require that the purchase price be equal to fair market value. Failure to respond, therefore, may result in a delay in the processing of your application to purchase the single family residence in which you reside, receipt of less than the maximum benefit, or deferral or complete disallowance of benefits to which you may be entitled.

Disclosure of the information is voluntary for present occupants of surplus residential properties which may be sold to housing-related private and public entities pursuant to Government Code Sections 54235, et seq. No penalty will be imposed for failure to respond. However, your qualifications for benefits (continued occupancy after sale at an affordable rent) must then be made by the purchaser on the basis of the available evidence of record. This may result in a delay in the sale of the property in which you reside, receipt of less than the maximum benefit, or deferral or complete disallowance of benefits to which you may be entitled.

Failure to provide information in connection with the benefits currently being sought will have no detrimental effect on any other benefit to which you are entitled.

RIGHT OF REVIEW: Individuals have the right of access to records containing personal information on them at all times during regular office hours of the Department.

GROSS INCOME FOR THE PURPOSE OF CALCULATING AFFORDABLE PRICE

"Gross income" shall mean the anticipated income of a person or family for the twelve-month period following the date of determination of income. If the circumstances are such that it is not reasonably feasible to anticipate a level of income over a twelve-month period, a shorter period may be used subject to a redetermination at the end of such a period. "Income" shall consist of the following:

A. Except as provided in subdivision (b), all payments from all sources received by the family head (even if temporarily absent) and each additional member of the family household who is not a minor shall be included in the annual income of a family. Income shall include, but not be limited to:
   (1) The gross amount, before any payroll deductions, of wages and salaries, overtime pay, commissions, fees, tips and bonuses;
   (2) The net income from operation of a business or profession or from rental of real or personal property (for this purpose, expenditures for business expansion or amortization of capital indebtedness shall not be deducted to determine the net income from a business);
   (3) Interest and dividends;
   (4) The full amount of periodic payments received from social security, annuities, insurance policies, retirement funds, pensions, disability or death benefits and other similar types of periodic receipts;
   (5) Payments in lieu of earnings, such as unemployment and disability compensation, worker's compensation and severance pay (but see subdivision (b) (3)).
   (6) Public Assistance. If the public assistance payment includes an amount specifically designated for shelter and utilities which is subject to adjustment by the public assistance agency in accordance with the actual cost of shelter and utilities, the amount of public assistance income to be included as income shall consist of:
      (a) The amount of the allowance or grant exclusive of the amount specifically designated for shelter and utilities, plus
      (b) The maximum amount which the public assistance agency could in fact allow for the family for shelter and utilities,
   (7) Periodic and determinable allowances such as alimony and child support payments, and regular contributions or gifts received from persons not residing in the dwelling;
   (8) All regular pay, special pay and allowances of a member of the Armed Forces (whether or not living in the dwelling) who is head of the family or spouse (but see subdivision (b)(5)).

For purposes of this section, net family assets means value of equity in real property, savings, stocks, bonds, and other forms of capital investment. The value of necessary items such as furniture and automobiles shall be excluded.

B. The following items shall not be considered as income:
   (1) Casual, sporadic or irregular gifts;
   (2) Amounts which are specifically for or in reimbursement of the cost of medical expenses;
   (3) Lump-sum additions to family assets, such as inheritances, insurance payments (including payments under health and accident insurance and worker's compensation), capital gains and settlement for personal or property losses;
   (4) Amounts of educational scholarships paid directly to the student or to the educational institution, and amounts paid by the government to a veteran for use in meeting the costs of tuition, fees, books and equipment. Any amounts of such scholarships, or payments to veterans not used for the above purposes or which are available for subsistence are to be included in income;
   (5) The special pay to a serviceman head of a family away from home and exposed to hostile fire;
   (6) Relocation payments made pursuant to federal, state, or local relocation law;
   (7) Foster child care payments;
   (8) The value of coupon allotments for the purchase of food pursuant to the Food Stamp Act of 1964 which is in excess of the amount actually charged the eligible household;
   (9) Payments received pursuant to participation in the following volunteer programs under the ACTION Agency:
      (a) National Volunteer Antipoverty Programs which include VISTA, Service Learning Programs and Special Volunteer Programs.
      (b) National Older American Volunteer Programs (for persons aged 60 and over) which include Retired Senior Volunteer Programs, Foster Grandparent Program, Older American Community Services Program, and National Volunteer Program to Assist Small Business Experience, Service Corps of Retired Executive (SCORE) and Active Corps of Executive (ACE).

STATE OF CALIFORNIA • DEPARTMENT OF TRANSPORTATION

AFFORDABLE SALES PRICE CALCULATIONS-
ALTERNATIVE A (LOWER INCOME HOUSEHOLDS)

RW 16-11 (9/94)

DD-_____-01-01

Monthly Gross Income:

A. Buyer's Income ..... $ _____

B. Co-Buyer's Income (If usable) ..... $ _____

C. Other Usable Income ..... $ _____

I. TOTAL MONTHLY GROSS INCOME ..... $ _____

II. TOTAL ANNUAL INCOME (1X12) ..... $ _____

III. Less ALLOWANCES..... (Total of A. B. and C. below) ..... $ _____

A. _____ Minors $_{(2)}$ X $300 ..... $ _____

B. Medical Expenses in Excess of

$ _____ (3% X II) ..... $ _____

C. Unusual Expenses$_{(3)}$ $ _____ ..... $ _____

IV. ANNUAL INCOME AFTER ALLOWANCES (II-III) ..... $ _____

V. MONTHLY INCOME AFTER ALLOWANCES (IV÷12) ..... $ _____

VI. MONTHLY GROSS FAMILY CONTRIBUTION TO HOUSING EXPENSES$_{(4)}$ ..... $ _____
(Principal, Interest, Property Taxes, Homeowners Insurance, Mortgage Insurance, Maintenance & Utilities) (_____ % of V)

VII. Less ALLOWANCE for MAINTENANCE and UTILITIES$_{(5)}$ ..... $ _____

VIII. AVAILABLE FOR OTHER HOUSING EXPENSES (VI-VII) ..... $ _____
(See Page 2 for detailed calculations)

A. Affordable Sales Price ..... $ _____

B. Less Affordable Mortgage ..... $ _____

C. Down Payment$_{(6)}$ ..... $ _____

IX. MINIMUM MONTHLY GROSS FAMILY CONTRIBUTION TO HOUSING EXPENSES ..... $ _____
(15% of I)

X. MINIMUM AFFORDABLE SALES PRICE (CALTRANS ACQUISITION PRICE) ..... $ _____

SPECIAL COMMENTS:

I certify that the Buyer's certified statement as to income employment and liabilities has been verified in accordance with current California Housing Finance Agency procedures. I also certify that the Affordable Sales Price (VIII A above) has been calculated in accordance with the provisions of Government Code Section 54236(b).

_____
DEPARTMENT OF TRANSPORTATION

AFFORDABLE SALES PRICE CALCULATIONS-

DD-_____-01-01

VIII. Affordable Sales Price Calculation - Alternative A

Monthly Mortgage Insurance (0.5% X Mortgage Amount ÷ 12), Plus
Monthly Homeowner's Insurance (0.3% X Mortgage Amount ÷ 12), Plus
Monthly Property Taxes (1.25% X Sales Price ÷ 12), Plus
Monthly Principal and Interest = Other Housing Expenses or $_____ (from VIII)
NOTE: Mortgage = 0.95 sales price + $500
Sales Price = $_____(from VIII)____ = $ _____

Mortgage = 0.95 Sales Price + $500 = 0.95 ($_____) + $500 = $_____

TABLE OF FACTORS:

Current FHA Interest Rate	Factor 1	Factor 2
11%	$5.09	0.0107185
11½%	$5.28	0.0110795
12%	$5.48	0.01145
12½%	$5.67	0.011811
13%	$5.86	0.0121815
13½%	$6.06	0.0125615
14%	$6.26	0.012932
14½%	$6.46	0.013312
15%	$6.65	0.0136825
15½%	$6.86	0.014072
16%	$7.06	0.014452
16½%	$7.26	0.014832
17%	$7.46	0.0152215
17½%	$7.66	0.0156015
18%	$7.87	0.015991

AFFORDABLE SALES PRICE CALCULATION - ALTERNATIVE A

FOOTNOTES:

1. The present occupants (the buyers) have certified their income to Caltrans and to the lender in accordance with the current HUD Rules and Regulations. Copies of Income Certification have been obtained for Caltrans files.
   Income certifications have been verified by the lender in accordance with the current HUD Rules and Regulations.
   MONTHLY GROSS INCOME utilized by the lender in calculating the affordable sales price is, in some instances, an adjusted income figure. Adjustments are discussed in the *Special Comments* section for each property and are based upon the lender's experience in processing loans through HUD for approval.
2. Minor is defined as a member of the family household (excluding foster children) other than the Family head or spouse, who is under 18 years of age or is a full-time student.

AFFORDABLE SALES PRICE CALCULATIONS- ALTERNATIVE A (LOWER INCOME HOUSEHOLDS) (Cont.)

RW 16-11 (9/94)

DD-_____-01-01

AFFORDABLE SALES PRICE CALCULATION - ALTERNATIVE A

3. Unusual Expenses are amounts paid by the Family for the care of Minors under 13 years of age or for the care of disabled or handicapped Family household members, but only where such care is necessary to enable a Family member to be gainfully employed, and the amount allowable as Unusual Expenses shall not exceed the amount of income from such employment.
4. Monthly Gross Family Contributions to Housing Expenses:
   (a) Families for whom contribution is based on 15 percent ratio. The monthly Gross Family Contribution shall be 15 percent of the Family's Monthly Income if the Family is:
      (1) A Large Very Low-Income Family (a family having 6 or more Minors and whose family income does not exceed 50% of Area Median Income); or
      (2) A Very Large Lower-Income Family (a family having 8 or more Minors and whose family income does not exceed the Lower Income limit); or
      (3) A Family which has combined total Medical Expenses and Unusual Expenses in excess of 25% of its TOTAL ANNUAL INCOME.
   (b) Other eligible families. In the case of other Eligible Families, the monthly Gross Family Contribution shall be 25 percent of the Family's Monthly Income After Allowances but in no event less than 15 percent of the Family's Monthly Gross Income.
5. For purpose of calculating an *estimated* affordable sales price, the local HUD Mortgage Credit Office schedules for maintenance and utilities were utilized. The *final* affordable sales price allowance for maintenance and utilities will be based on amounts contained in the FHA appraisal.
6. DOWN PAYMENT also calculated pursuant to current HUD Rules and Regulations. 3% of first $25,000 of Sales Price *Plus* 5% of Sales Price in excess of $25,000.

STATE OF CALIFORNIA • DEPARTMENT OF TRANSPORTATION

AFFORDABLE SALES PRICE CALCULATIONS-ALTERNATIVE B

RW 16-12 (9/94)

DD-_____-01-01

Monthly Gross Income:(1)

A. Buyer's Income ..... $ _____

B. Co-Buyer's Income (If usable) ..... $ _____

C. Other Usable Income ..... $ _____

I. TOTAL MONTHLY GROSS INCOME ..... $ _____

II. Less FEDERAL INCOME TAXES WITHHELD (2) ..... $ _____

III. Total Monthly NET EFFECTIVE INCOME (I-II) ..... $ _____

IV. MAXIMUM AFFORDABLE MONTHLY HOUSING EXPENSE(3) ..... $ _____
(Principal, Interest, Property Taxes, (% of III)
Homeowners Insurance, Mortgage Insurance, Maintenance & Utilities)
Less ALLOWANCE for MAINTENANCE and UTILITIES(4) ..... $ _____

V. AVAILABLE FOR OTHER HOUSING EXPENSES ..... $ _____
(See Page 2 for detailed calculations)

A. AFFORDABLE SALES PRICE ..... $ _____

B. Less AFFORDABLE MORTGAGE ..... $ _____

C. DOWN PAYMENT(5) ..... $ _____

_____

VI. OTHER RECURRING MONTHLY CHARGES ..... (Total of A, B, and C below) ..... $ _____

A. State Income Taxes(6) Withheld ..... $ _____

B. Social Security Taxes(7) Withheld ..... $ _____

C. Other debts (12 months to run)(8) ..... $ _____

VII. TOTAL FIXED MONTHLY PAYMENTS(9) (IV & VI) ..... $ _____
(% of III)

SPECIAL COMMENTS:

I certify that the Buyer's certified statement as to income employment and liabilities has been verified by the Lender in accordance with current HUD procedures. I also certify that the Affordable Sales Price (V A. above) has been calculated in accordance with the provisions of Government Code Section 54236(b).

_____
DEPARTMENT OF TRANSPORTATION

DD-_____-01-01

Monthly Mortgage Insurance$_{(10)}$, plus
Monthly Homeowner's Fire Insurance$_{(11)}$, plus
Monthly Property Taxes$_{(12)}$, plus
Monthly Principal and Interest = Other Housing Expenses or $_____ (from V)
NOTE: Mortgage = 0.95 sales price + $500
Sales Price = $_____(from V)____ = $ _____

Mortgage = 0.95 Sales Price + $500 = 0.95 ($_____) + $500 = $_____

TABLE OF FACTORS:

Current FHA Interest Rate	Factor 1	Factor 2
11%	$5.09	0.0107185
11½%	$5.28	0.0110795
12%	$5.48	0.01145
12½%	$5.67	0.011811
13%	$5.86	0.0121815
13½%	$6.06	0.0125615
14%	$6.26	0.012932
14½%	$6.46	0.013312
15%	$6.65	0.0136825
15½%	$6.86	0.014072
16%	$7.06	0.014452
16½%	$7.26	0.014832
17%	$7.46	0.0152215
17½%	$7.66	0.0156015
18%	$7.87	0.015991

FOOTNOTES:

1. The present occupants (the buyers) have certified their income to the lender in accordance with the current HUD Rules and Regulations. Copies of Income Certification have been obtained for Caltrans files.
   Income certifications have been verified by the lender in accordance with the current HUD Rules and Regulations.
   MONTHLY GROSS INCOME utilized by the lender in calculating the affordable sales price is, in some instances, an adjusted income figure. Adjustments are discussed in the *Special Comments* section for each property and are based upon the lender's experience in processing loans through HUD for approval.
2. FEDERAL INCOME TAXES WITHHELD based on marital status and number of exemptions.

DD-_____-01-01

3. HUD Section 235 regulations provide that purchasers' monthly housing expenses generally should not exceed 35% of their MONTHLY NET EFFECTIVE INCOME (TOTAL MONTHLY GROSS INCOME less FEDERAL INCOME TAXES WITHHELD). If the purchasers' income is not totally stable and/or their OTHER RECURRING MONTHLY CHARGES are more than 15% of their NET EFFECTIVE INCOME, the maximum percentage allowable to housing expenses may be reduced below 35%, to a percentage believed by the lender to be acceptable to HUD.
4. For purposes of calculating an *estimated* affordable sales price prior to submission to the California Transportation Commission, the Local HUD Mortgage Credit Office schedules for maintenance and utilities were utilized. The *final* affordable sales price allowance for maintenance and utilities will be based on amounts contained in the FHA appraisal.
5. DOWN PAYMENT also calculated pursuant to current HUD Rules and Regulations. 3% of first $25,000 of Sales Price *Plus* 5% of Sales Price in excess of $25,000.
6. STATE INCOME TAXES WITHHELD based on marital status and number of exemptions.
7. SOCIAL SECURITY TAXES based on 6.70% of *wages* earned in 1982 not to exceed $181 per month for any wage earner. Income other than wages is not subject to Social Security taxes.
8. Other debts verified by lender to run twelve months or more such as compulsory retirement contributions, installment account payments and other loan account payments.
9. HUD Section 235 regulations provide that purchasers' TOTAL FIXED MONTHLY PAYMENTS (MONTHLY HOUSING EXPENSES and OTHER RECURRING MONTHLY CHARGES) generally should not exceed 50% of their NET EFFECTIVE INCOME unless they are accustomed to paying more for such payments.
10. Yearly Mortgage Insurance Factor: 0.5% X Mortgage Amount.
11. Yearly Homeowner's Fire Insurance: 0.3% X Mortgage Amount.
12. Yearly Property taxes under Proposition 13: 1.25% X Sales Price.

Space above this line for Recorder's Use

DISTRICT	COUNTY	ROUTE	LOCATION	NUMBER

RIGHT TO PURCHASE AGREEMENT BETWEEN CALTRANS AND BUYER

THIS AGREEMENT, dated _____, is entered into between the STATE OF CALIFORNIA,

DEPARTMENT OF TRANSPORTATION (CALTRANS) _____

_____

[Insert address of District Office]

and _____

(Insert name of BUYER)

_____

(BUYER).

1. The California Legislature has declared in Government Code Section 54235 that sales of state-owned surplus residential property which result in displacement and/or a loss of low and moderate income housing cause a significant environmental effect.
2. Government Code Section 54235 and following sections require that in order to mitigate such environmental effect, all surplus single family residences must be offered to eligible current occupants at an affordable price, which may be less than market value.
3. Government Code Section 54237 requires that when state-owned surplus single family residences are sold to present occupants for less than market value, the selling agency must impose such terms, conditions and restrictions as will assure that such housing will remain available to persons and families of low or moderate income and households with incomes no greater than the incomes of present occupants in proportion to the area median income.
4. BUYER has been given the opportunity to purchase the single family residence located at _____ _____ ___ [Insert address] _____ (the PROPERTY) for $_____ (the "base price") although the market value of the PROPERTY has been estimated to be $_____.
5. In return for that opportunity, BUYER hereby covenants and agrees that:
   A. The interest in the PROPERTY to be conveyed to BUYER will be subject to a thirty (30) year continuing pre-emptive right to purchase (RIGHT TO PURCHASE) the PROPERTY vested in Caltrans.
   B. Caltrans shall exercise the RIGHT TO PURCHASE only for the purpose of making the PROPERTY available to a person or family of low or moderate income or household with an income no greater than the income of the present occupants in proportion to the area median income.
   C. Caltrans may designate a governmental or nonprofit organization (hereinafter DESIGNEE) to exercise its RIGHT TO PURCHASE. BUYER shall be given written notice of the name and address of any DESIGNEE.
   D. The RIGHT TO PURCHASE may be assigned to an individual private buyer (hereinafter ASSIGNEE) who qualifies as a low or moderate income person or family or a household with an income no greater than the income of the present occupants in proportion to the area median income.

E. BUYER will not lease or sublease the PROPERTY, or any part thereof, or allow parties other than BUYER to live in the PROPERTY, without the prior written consent of that DESIGNEE.

F. Except for purposes of repairing or maintaining the PROPERTY, BUYER shall not encumber the PROPERTY or any interest therein, in whole or in part, without the prior express written consent of Caltrans or if there is a DESIGNEE, the prior written consent of that DESIGNEE.

G. BUYER shall not add any substantial improvements to the PROPERTY without the prior express written consent of Caltrans or if there is a DESIGNEE, the prior written consent of that DESIGNEE.

"Substantial improvements" are those improvements which materially add to the value of the PROPERTY or adapt it to new uses. Examples of such improvements are: putting a recreation room in an unfinished basement, adding another bathroom or bedroom, adding a swimming pool, enlarging a garage, installing a fireplace, or constructing a patio.

"Substantial improvements" do *not* include emergency repairs, maintenance or work required by applicable building or housing codes.

In order to assure that the PROPERTY will remain affordable to persons and families of low or moderate income and households with incomes no greater than the income of the BUYER in proportion to the area median income, Caltrans will minimize substantial improvements to the PROPERTY.

H. BUYER shall not sell, transfer or assign the PROPERTY, or any interest therein, in whole or in part, or agree to do so, except for transfers to the BUYER'S spouse or children occasioned by the death or divorce of BUYER, without first complying with the procedures set out in Paragraph 7 below.

In addition, at the time of transfer to BUYER'S spouse or children, the spouse or children taking the PROPERTY shall execute an agreement with CALTRANS renewing the RIGHT TO PURCHASE.

I. BUYER shall at all times maintain insurance on the PROPERTY at a level of at least 80 percent of replacement cost and shall provide that such insurance policy names Caltrans as an additional insured.

J. BUYER shall secure financing to buy the PROPERTY and shall cause the lender to include in the deed of trust securing the note a provision that any power of sale is subject to the RIGHT TO PURCHASE.

6. To insure compliance with the above described conditions, the BUYER will allow CALTRANS or its DESIGNEE periodic inspection of the interior and exterior of the unit during normal business hours or otherwise by special arrangements, subject to a written five day notice.

7. In the event that BUYER, BUYER'S spouse or children who have title pursuant to subparagraph H of Paragraph 5 above, or any owner who has title derived through foreclosure, deed in lieu of foreclosure, trustee's sale or otherwise, desire to sell, transfer or assign the PROPERTY, they shall comply with the following procedures:

A. Simultaneously notify Caltrans and its DESIGNEES (if any) of the intent to sell, transfer or assign, in writing by certified mail (hereinafter "NOTICE OF INTENT"). Caltrans or if there is a DESIGNEE, that DESIGNEE shall then have a RIGHT TO PURCHASE the PROPERTY for the price and terms set out below, which RIGHT TO PURCHASE shall be exercisable, by delivery of written notice (hereinafter "NOTICE OF ACCEPTANCE) to BUYER by personal delivery or certified mail, within sixty (60) calendar days from the date of receipt of the NOTICE OF INTENT. (Hereinafter all references to days shall refer to calendar days.)

B. If BUYER fails to comply with the provisions of subparagraphs E, F, G, or H of Paragraph 5 above, then Caltrans, or if there is a DESIGNEE, that DESIGNEE may deem, at its election, that BUYER had delivered a NOTICE OF INTENT and the RIGHT TO PURCHASE may be exercised pursuant to Paragraph 7 herein. Failure to exercise the RIGHT TO PURCHASE under the circumstances described in this paragraph shall not result in the expiration of the RIGHT TO PURCHASE, shall not give BUYER the right to sell the PROPERTY at market value pursuant to subparagraph G of Paragraph 7 below and shall not bar Caltrans from taking other action to enforce this Attachment to Grant Deed.

C. If the RIGHT TO PURCHASE is exercised, sales escrow shall be opened within fifteen (15) days after NOTICE OF ACCEPTANCE is delivered, and closed as soon as practicable.

D. Following receipt of the NOTICE OF INTENT, the entity exercising the RIGHT TO PURCHASE will inspect the PROPERTY to determine whether in its judgement repairs, rehabilitation, or replacements ("fix-up costs"), beyond the requirements of normal maintenance are necessary in order to put the unit into saleable condition. If any such is deemed to be necessary, they shall either be provided by BUYER before close of escrow or the entity exercising the RIGHT TO PURCHASE will determine the cost thereof which shall be the "fix-up costs."

E. In the event the RIGHT TO PURCHASE is exercised, the "gross option price" shall be:

(1) The "base price" for the PROPERTY, as shown in Paragraph 4 above, adjusted by a percentage which is the same as the percentage by which the median household income for a family of four in _____ County increased between the date that BUYER took title to the PROPERTY and the date that the NOTICE OF ACCEPTANCE was delivered. Median income shall be determined on the basis of county median income figures published by the United States Department of Housing and Urban Development (HUD) or if HUD does not publish such figures, on the basis of figures published by the STATE OF CALIFORNIA, DEPARTMENT OF HOUSING AND COMMUNITY DEVELOPMENT

(HCD), and was $_____ in _____ County on the date that BUYER took title to the PROPERTY. (For example, the base price is $52,000 for a unit and the median income the date BUYER takes title is $20,000 and the median income on the date the NOTICE OF ACCEPTANCE is delivered is $25,000, the percentage increase is 25 percent. Therefore, the base price by BUYER will be increased by 25 percent from $52,000 to $65,000).

(2) Plus the current value of any substantial improvements as determined by the entity exercising the RIGHT TO PURCHASE if such improvements had the prior written approval as required by subparagraph G of Paragraph 5 above.

F. The "net option price" to be paid to BUYER at close of escrow will be the "gross option price," *less the total of:*
   (a) The unpaid balance of the First Deed of Trust at close of escrow, including any costs that may be incurred as a result of a default by BUYER; and
   (b) The fix-up costs unless fix-up work is provided by BUYER; and
   (c) Any other liens or encumbrances at close of escrow and prorated current real estate taxes; and
   (d) Three percent of the "gross option price" which amount will be paid to the entity exercising the RIGHT TO PURCHASE to cover the cost of administration; and
   (e) All escrow, title policy and closing costs, except for costs which the lender or applicable law require to be paid by the party acquiring the PROPERTY.

G. The "net option price" will be paid in cash at the close of escrow or as otherwise provided by mutual agreement.

H. In the event the BUYER provides the notices required in subparagraph A of Paragraph 7 above and the RIGHT TO PURCHASE is not exercised within the time limits set forth in this Agreement, BUYER shall be free to sell the PROPERTY, at its then market value, in an arm's length transaction. Caltrans may offer assistance to BUYER in conducting a market value sale and BUYER shall not unreasonably refuse to accept a market value offer for the PROPERTY. The proceeds of the sale shall be divided between Caltrans and BUYER as follows:

To BUYER: Up to, but not to exceed, the net amount BUYER would have received under subparagraph F of Paragraph 7 above had the RIGHT TO PURCHASE been exercised on the date of the sale of the PROPERTY.

To Caltrans: The balance of the proceeds of the sale. Normal real estate brokerage commissions, if paid, shall be taken from Caltrans' share of the proceeds.

8. A. BUYER agrees to cause to be filed for records in the Office of the Recorder of the County of _____ a request for a copy of any Notice of Default and of any Notice of Sale under any deed of trust or mortgage with power of sale encumbering the PROPERTY pursuant to Section 2924(b) of the Civil Code of the State of California. Such request shall specify that any such notice shall be mailed to Caltrans. Any Notice of Sale given pursuant to Civil Code Section 2924(f) shall constitute a NOTICE OF INTENT giving rise to the RIGHT TO PURCHASE under this Agreement. The RIGHT TO PURCHASE shall take priority over any trustee's sale or foreclosure.

B. If the RIGHT TO PURCHASE is not exercised within the time limits specified in Paragraph 7, and the PROPERTY is sold at trustee's sale or foreclosure or by deed in lieu of foreclosure, the party who acquires the PROPERTY shall take subject to the RIGHT TO PURCHASE and all surplus proceeds will be distributed as follows:

To BUYERS: Up to, but not to exceed, the net amount BUYER would have received under subparagraph E of Paragraph 7 had the RIGHT TO PURCHASE been exercised on the date of the foreclosure.

To Caltrans: The balance of the surplus.

C. If BUYER cures any default and the RIGHT TO PURCHASE is not exercised within the time limits specified in Paragraph 7, the RIGHT TO PURCHASE will continue in existence.

9. This Agreement shall be recorded at close of escrow, so as to put all later parties on notice of the RIGHT TO PURCHASE under this Agreement.

10. In the event the PROPERTY is damaged and the insurance proceeds are not to be used to rebuild, the PROPERTY will be sold at market value by BUYER. In that event, or in the event of acquisition for a public use, the proceeds from the insurance and sale or from the acquisition shall be distributed as follows:
To BUYER: Up to, but not to exceed the net amount BUYER would have received under subparagraph E of Paragraph 7 above had the RIGHT TO PURCHASE been exercised on the date of damage or acquisition.
To Caltrans: The balance, if any.

11. Should it become necessary to commence legal proceedings to enforce any of the provisions of this Agreement, the parties hereto agree that the prevailing party shall be entitled to all legal costs incurred in connection therewith including a reasonable sum for attorney's fees.

12. The notices required herein shall be delivered to the addresses set out in this Agreement unless and until the person or persons entitled to such notices indicate in writing to the other parties hereto of a different address to which any notice or notices should be delivered.

13. Should BUYER fail to comply with the terms, conditions and restrictions imposed by this Agreement, Caltrans reserves the right to require BUYER to pay to Caltrans the difference between the actual price paid by BUYER and the fair market value of the PROPERTY at the time of noncompliance plus six percent interest on such amount for the period of time the property has been held by BUYER.
14. Caltrans shall not become liable to BUYER nor become obligated in any manner to BUYER by reason of any assignment of the RIGHT TO PURCHASE, nor shall Caltrans be in any way obligated or liable to BUYER for any failure of any DESIGNEE or ASSIGNEE to consummate a purchase of the PROPERTY or to comply with the terms of any Agreement for the sale of the PROPERTY.
15. If any provision or application of this Agreement is held invalid by a court of law, such invalidity shall not affect other provisions or applications of this Agreement which can be given effect without the invalid provision or application, and to this end the provisions of this Agreement are severable.
16. This Agreement shall automatically terminate thirty (30) years from its date. Until then, this Agreement shall inure to the benefit of and bind Caltrans and BUYER, and their respective heirs, successors, designees and assignees. All obligations hereby imposed shall be deemed to be covenants running with the land.
17. The provisions of this Agreement shall become permanently void upon acquisition of PROPERTY title by the Secretary of HUD.

_____

_____
BUYER

Caltrans

By _____

(Notary acknowledgments must be attached
per Civil Code Section 1180 et seq.)

STATE OF CALIFORNIA • DEPARTMENT OF TRANSPORTATION

REQUEST FOR PROPOSAL DEPARTMENT OF TRANSPORTATION DISPOSAL OF _____ PROPERTIES

RW 16-14 (9/94)

INTRODUCTION

State law (Government Code Section 54235 et seq) provides for the offering of state-owned improved surplus residential properties to housing-related private and public entities for reasonable prices to be determined on the basis of affordability to present occupants and other low and moderate income households.

Within _____ there exists _____ such properties which are being offered for sale by the Department of Transportation. This Request For Proposal solicits proposals for the purchase of these properties, which must be developed as limited equity cooperative housing (and rehabilitated, if necessary) with first right of occupancy to the present occupants. Except that where the development of such cooperative or cooperatives is not feasible, the purchasing entity shall cause the property to be used for low and moderate income rental or owner-occupied housing, with first right of occupancy to the present tenants.

GENERAL REQUIREMENTS

A. PRIORITIES

Priority will be given to applicants whose proposal:

1) offers the highest price to Caltrans;
2) will serve the largest number of low and moderate income households at an affordable price or affordable rent;
3) demonstrates innovative use of public or private funds and is feasible in today's market; and
4) serves an underserved segment of the community, as defined in _____ Housing Element.

B. HOUSING-RELATED PRIVATE AND PUBLIC ENTITIES

Applicant must be a housing-related private or public entity which can demonstrate the authority and capacity to own and operate housing for persons and families of low and moderate income. Applicant must be in business, in good faith, to provide such housing to the general public.

Proposals submitted for the purpose of acquiring housing for relatives or friends or for other personal reasons are not acceptable.

C. REASONABLE PRICE

The term "reasonable price" means a price which allows economically feasible use of the property as decent, safe and sanitary housing at affordable rents and affordable prices for persons and families of low or moderate income.

D. AFFORDABLE PRICE

The term "affordable price" means, in the case of a purchaser, other than a lower income household, the price for residential property for which the purchaser's monthly payments will not exceed that portion of the purchasing household's adjusted income as determined in accordance with the regulations of the United States Department of Housing and Urban Development, issued pursuant to Section 235 of the National Housing Act; and, in the case of a purchaser that is a lower income household, the price for residential property for which the purchaser's monthly payments will not exceed that portion of the purchasing household's adjusted income as determined in accordance with the regulations of the United States Department of Housing and Urban Development issued pursuant to Section 8 of the United States Housing Act 1937.

E. AFFORDABLE RENT

The term "affordable rent" means, in the case of an occupant person or family, other than a person or family of low or moderate income, rent for residential property which is not more than 25 percent of the occupant household's gross monthly income; and in the case of an occupant person or family of low or moderate income, rent for residential property which is

not more than the percentage of the adjusted income of the occupant person or family as permitted under regulations issued pursuant to Section 8 of the United States Housing Act of 1937, but not in excess of the market rental value for comparable property.

F. INCOME LIMITS

Household income of *new* tenants shall not exceed the following moderate income limits:

Household Size	Income Limit	Household Size	Income Limit
1		5	
2		6	
3		7	
4		8	

(Applicant is advised to obtain income limits from proposed financing sources before determining income limits, which vary from program to program.)

G. First right of occupancy must be provided to present occupants at an affordable rent. (If available, income of present occupants will be provided by Caltrans upon request.)

H. The purchasing entity shall cause the property to be rehabilitated in accordance with the provisions of Government Code Section 54237(d).

I. DESCRIPTION OF PROPERTIES

A more detailed description of improvements is included on Attachment A.

Address	*No. Bedrooms*	*Sq. Footage*	*Caltrans Original Acquisition Price*

A walk-through of the above-noted properties has been scheduled for _____. All interested applicants are invited to attend. Copies of termite reports and Government Code Sections 54235, et seq. will be available for inspection at the walk-through.

J. CONTENTS OF PURCHASE PROPOSAL

Applicants shall submit a proposal consisting of the following:

- Name, address, and telephone number of applicant;
- Background of applicant, including experience in other low and moderate income housing projects.
- A completed *PROPOSAL FORM* (Attachment B) for each property including proposed purchase price, estimated cost of rehabilitation (if needed), income of target household for each unit, source of financing for acquisition, rehabilitation and subsidies, if available, including interest rates and terms, etc.
- Evidence, such as copy of articles of incorporation and by-laws or comparable documents, that applicant is a housing-related entity as described in Paragraph B.
- Description of low and moderate income housing projects previously completed by applicant, including information as to funding utilized in such projects."

In determining a proposed purchase price, applicant will demonstrate that said price is necessary to provide affordable housing that is economically feasible, decent, safe, and sanitary. In no event, however, will the approved proposal be less than Caltrans original acquisition price.

Offers may be submitted on all or some of the properties.

- Long-term management and maintenance plans.

K. PROCEDURES

1. All proposals shall be submitted to:

   Department of Transportation

   _____

   _____

   Attn: _____

   by _____ 1, 19 ____

2. Proposals will be reviewed for acceptance by a committee consisting of employees of the Departments of Transportation and Housing and Community Development.

3. The successful/chosen applicant will be required to execute a written *AGREEMENT FOR THE PURCHASE OF REAL PROPERTY* - sample included as Attachment C.

4. The proposed sale will be submitted to the California Transportation Commission.

5. If the sale is approved by the California Transportation Commission, the successful applicant shall proceed to finalize the purchase of the property or properties.

   For further information on this Request For Proposal contact _____.

L. AGREEMENT FOR THE PURCHASE OF REAL PROPERTY

The successful applicant will be required to enter into a written *AGREEMENT FOR THE PURCHASE OF REAL PROPERTY* which shall consist of:

1. approved purchase proposal;
2. final acquisition terms as to all properties;
3. terms of the performance and commencement date;
4. terms, conditions and restrictions which will assure that such housing will remain available to persons and families of low or moderate income;
5. compliance with all applicable local, State, and Federal laws.

M. DEPOSIT

The successful applicant must present, within 10 days after selection, either CASHIERS CHECK or a MONEY ORDER made payable to the State Department of Transportation in the amount of the required deposit of _____ (District fill in appropriate amount) per property.

FORFEITURE OF DEPOSIT

The deposit shall be NONREFUNDABLE in the event that the successful applicant fails to comply with any and all the terms of the AGREEMENT as herein provided.

All payments must be made in CASH, CASHIERS CHECK, or MONEY ORDER made payable to the State Department of Transportation. The successful applicant's deposit made at the time of sale will be retained by State and not placed in escrow.

N. CASH-CREDIT TERMS

The purchase may be a cash or credit transaction. In either event, escrow must be closed no later than _____.

The successful applicant, if desiring credit terms, shall, within 30 days after executing the AGREEMENT, open an escrow at his expense with a mutually acceptable title company and by _____ deposit a sum of money which will equal at least 30% of the successful proposal, together with the fire insurance policy as provided for in the proposal and a signed Note and Trust Deed acceptable in form to the State of California in the amount of the balance of the purchase price. Said Note shall provide the balance of the purchase price and will be payable in monthly installments for a period not to exceed 10 years. The Note shall bear interest at the rate of ____ percent per annum.

Interest will commence the day after the close of escrow. The principal obligation under the Trust Deed may be prepaid in full or in part at any time without penalty. Partial payments shall be applied against the principal obligation and shall not replace regularly scheduled payments. Late payments shall be subject to penalty charges. Loans cannot be assumed or subordinated.

The successful applicant, if intending an all-cash transaction, shall, within 30 days after executing the *AGREEMENT FOR THE PURCHASE OF REAL PROPERTY*, open an escrow at his expense with a mutually acceptable title company and by _____ deposit the balance of the purchase price.

O. LIMITING CONDITIONS

(1) Any sale is subject to the approval of the California Transportation Commission. If the sale is not approved, the deposit money will be refunded without interest. The successful applicant may take possession when the Director's Deed is recorded.

(2) When the sale is approved by the California Transportation Commission and the successful applicant elects to exercise the AGREEMENT, the deposit will be credited toward the purchase price.

(3) The State reserves the right to reject any and all proposals and to cancel the sale in part or in its entirety any time prior to the approval of the sale by the California Transportation Commission. In the event of cancellation of sale and/or rejection of any proposals, the respective deposits of money shall be refunded without interest.

(4) The right, title, and interest in the property to be sold shall not exceed that vested in the State of California, and this sale is subject to all title exceptions and reservations whether or not of record. The successful purchaser may obtain a policy of title insurance at his own expense.

(5) The successful purchaser shall pay all recording fees, documentary stamp taxes, or other real estate transaction taxes or fees by whatever name known, including escrow fees or brokers commission, if any, and personal property sales taxes where applicable.

(6) Should the successful purchaser desire a survey of the property, this may be accomplished by an independent survey at the purchaser's expense. No warranty is made by the Department of Transportation relative to the ground locations of property lines other than monumented highway right of way lines.

(7) The successful purchaser shall be responsible for checking and complying with local building codes and ordinances. All properties are sold in an "as is" condition. See local Planning Department for permitted land uses.

DESCRIPTION OF IMPROVEMENTS

Address	Description

PROPOSAL FORM

District	County	Route	Post Mile	Number

I. Anticipated Gross Monthly Rental Income $ _____

(Applicant should take into account that affordable rent of future tenants may be higher or lower than present occupants.)

II. Less Monthly Costs to be Paid by Buyer/Housing Entity and/or Tenant =

A. Utilities $ _____
B. Fire/Hazard Insurance $ _____
C. Real Estate Taxes (if any) $ _____
D. Management $ _____
E. Normal Maintenance $ _____
F. Reserves for Replacement $ _____
G. Other (specify) _____ $ _____

Total Operating Costs (II) $ _____

III. Net Income/Available to Service Debt (I minus II) $ _____

IV. Estimated Cost of Rehabilitation Work (if any) $ _____
Specify nature of work _____

V. If Separately Financed, Term and Interest Rate of Rehabilitation Loan:

VI. Monthly Payment to Amortize Rehabilitation Loan (if any) $ _____

VII. Amount Available Now to Amortize Purchase Money Loan (III minus VI) $ _____

VIII. Best Available Mortgage/Trust Deed Terms:

A. _____ % down payment
B. _____ years
C. _____ % interest rate

IX. Affordable Mortgage/Trust Deed Calculated on Basis of VII and VIII $ _____

X. Down Payment $ _____

XI. Caltrans Original Acquisition Price $ _____

XII. Proposed Purchase Price $ _____

In reviewing your proposal, Caltrans will take into consideration that there may be surplus income available upon payoff of rehabilitation loan. Applicant should also take this into consideration when making your proposal.

Indicate the basis for each estimated amount (Except III and VII).

For reserves for replacement, indicate:

1. Items requiring reserves

2. Estimated life of each

3. Monthly reserve amount for each

Indicate source and details of any loan to be made in connection with this purchase.

STATE OF CALIFORNIA • DEPARTMENT OF TRANSPORTATION

AGREEMENT FOR THE PURCHASE OF REAL PROPERTY (SALE TO HOUSING ENTITY)

RW 16-15 (9/94)

Dist.-Co.-Rte. _____
Director's Deed No.: _____
Seller: State of California
Buyer: _____

_____
Date: _____

This Agreement is entered into between the State of California (Department of Transportation; hereinafter called "SELLER") and the undersigned purchaser (hereinafter called "BUYER") for the purchase of certain real property.

It Is Hereby Agreed As Follows:

1. SELLER agrees to sell to BUYER and BUYER agrees to purchase from SELLER upon the terms and for the consideration set forth in this Agreement, all that certain real property situated in the City of _____, County of _____, State of California and legally described as follows:

   also known as:_____
   _____
   (Street Address)
   It is understood and agreed that the real property conveyed shall include all building fixtures, equipment and appliances which are part of the above-described real property.
2. Consideration:
   BUYER will, within 10 days after execution of this Agreement, present either cashier's check or money order made payable to the State of California, Department of Transportation, an option deposit of: $_____
   Estimated Proceeds of Loan to be obtained by BUYER: $_____
   Sales Price (i.e., "reasonable price"): $_____
   Prior to the close of escrow, BUYER will deposit into escrow, or cause to be deposited into escrow, all funds and/or documents, required from BUYER to enable escrow to close. Seller agrees to deposit with the Escrow Agent a Director's Deed conveying the real property to BUYER, together with such other instruments as are necessary.
3. Title to the property shall be vested: _____.
   _____
4. Conveyance by SELLER shall be all of its right, title and interest in the property to be sold, subject to all exceptions and reservations whether or not of record and an agreement acceptable to SELLER which shall contain such terms, conditions and restrictions as will assure that the real property will remain available to persons and families of low or moderate income. BUYER may obtain a policy of title insurance at BUYER'S expense.
5. BUYER will procure, at BUYER'S expense, new fire insurance coverage in an amount and type satisfactory to SELLER. Proof of coverage will be deposited with SELLER.
6. Escrow Fees, Charges, and Costs:
   (a) BUYER shall pay all recording fees, documentary stamp taxes, or other real estate transaction taxes or fees by whatever name known, including escrow fees or brokers commission, if any, and personal property sales taxes where applicable.
   (b) It is expressly understood and agreed that the net proceeds received by SELLER from this sale may not be less than $_____, which is the original acquisition price paid by SELLER.

7. BUYER acknowledges that the subject property has been removed from the Assessed Property rolls in the County of BUYER further acknowledges full responsibility for the payment of all property taxes and assessments accruing after the close of escrow.
8. This Agreement, on behalf of the SELLER, is subject to approval by the California Transportation Commission.
9. SELLER makes no warranty as to condition of the real property and BUYER will fund repairs required by lenders and if a government housing assistance program is used, repairs required by such program.
10. BUYER'S option deposit shall be NONREFUNDABLE in the event that BUYER unilaterally fails to comply with any and all terms of this Agreement and BUYER shall be responsible for all appropriate cancellation fees and charges for services rendered to that point.
    Should BUYER and SELLER mutually agree to cancel this escrow, such fees and charges will be paid by BUYER in accordance with paragraph 6 of this Agreement.
11. The terms, conditions, covenants and agreements set forth herein shall apply to and bind the heirs, executors, administrators, assigns and successors of the parties hereto.
12. BUYER agrees to utilize the real property conveyed as housing for persons or families of low and moderate income in accordance with the provisions of Government Code Sections 54235, et seq.
13. BUYER shall hold SELLER harmless from any and all claims for rights and/or benefits under Government Code Sections 7260, et seq. and 54235, et seq. from the present occupants of the real property conveyed in any way resulting from or caused by use and management of the real property by the BUYER.
14. BUYER agrees to provide SELLER on or before the first day of February after escrow closes and each February 1 thereafter with a report detailing BUYER'S use of and rental rates charged for the real property conveyed for the time period since the preceding report.
15. SELLER agrees to subordinate SELLER'S deed of trust to any purchase money deed of trust incurred by BUYER in this transaction.
16. This Agreement contains the entire agreement between the parties and neither party relies upon any warranty or representation not contained in these documents.
17. BUYER agrees that transfer of title to BUYER shall be by Director's Deed and that BUYER may not take possession of acquired property until after the Director's Deed is recorded.
18. The term of this Agreement shall be _____ months and shall remain in force thereafter until terminated by the SELLER. If BUYER is unable to proceed or if BUYER fails to significantly meet its program objectives for reasons within its control, SELLER shall notify BUYER in writing of the particulars of its failure(s). If, within sixty (60) days after such notice is delivered, BUYER has not corrected its failures, SELLER may terminate this Agreement.
19. Mailing address of BUYER:
20. Mailing address of SELLER:
    IN WITNESS WHEREOF, the parties have executed this Agreement the day and year first above written.

_____	_____
_____	_____
_____	_____
_____	_____

Space above this line for Recorder's Use

DISTRICT	COUNTY	ROUTE	LOCATION	NUMBER

NOTE AND AGREEMENT SECURED BY A DEED OF TRUST

THIS NOTE AND AGREEMENT, dated _____, is made by

_____ (BUYER) as evidence of a debt to
(Insert name of BUYER)
the STATE OF CALIFORNIA, DEPARTMENT OF TRANSPORTATION (CALTRANS)

_____
[Insert address of District Office]

1. The California Legislature has declared in Government Code Section 54235 that sales of State-owned surplus residential property which result in displacement and/or a loss of low and moderate income housing cause a significant environmental effect.

2. Government Code Section 54235 and following sections require that in order to mitigate such environmental effect, all surplus residential properties not sold directly to eligible present occupants must be offered to housing-related private and public entities to be developed as limited equity cooperative housing or low and moderate income rental or owner-occupied housing. Such offer must be at a reasonable price, which is best suited to economically feasible use of the property as decent, safe and sanitary housing at affordable rents and affordable prices for persons and families of low or moderate income.

3. Government Code Section 54237 requires that when State-owned surplus single family residences are sold to a housing-related public or private entity for less than fair market value, the selling agency shall impose such terms, conditions and restrictions as will assure that such housing will remain available to persons and families of low or moderate income.

4. BUYER has been given the opportunity to purchase the surplus residential property located at _____

   _____
   [Insert address]
   _____(the PROPERTY)
   for $_____ although the market value of the PROPERTY has been estimated to be $_____.

5. In return for that opportunity and in the event BUYER does not comply with the terms, conditions, and restrictions set forth in Paragraph 6, below, BUYER agrees to pay Caltrans a principal amount equal to the difference between $_____ _____ (the actual price paid by BUYER for the PROPERTY) and the fair market value of the PROPERTY, at the time of Caltrans' determination of noncompliance, plus _____ ( ) percent simple interest per year on such amount for the period of time the PROPERTY has been held by BUYER.

6. On the occurrence of any of the following events CALTRANS, at its sole election, may declare all or any portion of the principal and accrued interest on this NOTE AND AGREEMENT to be immediately due and payable and may proceed at once without further notice to enforce this NOTE AND AGREEMENT according to law:

   A. BUYER, its successors or assigns, use the PROPERTY for a purpose other than providing housing in the manner required by Government Code Section 54235 and following sections.

   B. BUYER, its successors or assigns, charge occupants of the PROPERTY a rent in excess of "affordable rent" as defined in Government Code Section 54236(g).

   C. BUYER, its successors or assigns, fail to rehabilitate the PROPERTY and maintain it in compliance with applicable local building and safety regulations.

   D. BUYER, its successors or assigns, sell or otherwise transfer the PROPERTY without the prior express written consent of Caltrans.

7. To insure compliance with the above described conditions, the BUYER will allow CALTRANS or its authorized agent periodic inspection of the interior and exterior of the unit during normal business hours or otherwise by special arrangement, subject to a written five (5) day notice.

8. This NOTE AND AGREEMENT shall automatically cease and terminate thirty (30) years from its date.

9. No delay or failure of CALTRANS in the exercise of any right or remedy hereunder or under any other agreement, which secures or is related hereto, shall affect any such right or remedy, and no single or partial exercise of any such right or remedy shall preclude any further exercise thereof, and no action taken or omitted by CALTRANS shall be deemed a waiver of any such right of remedy.

10. The indebtedness evidenced by this NOTE AND AGREEMENT is secured by a Deed of Trust dated _____ ____.

11. Should it become necessary to commence legal proceedings to enforce any of the provisions of this NOTE AND AGREEMENT, the parties agree that the prevailing party shall be entitled to all legal costs incurred in connection therewith including a reasonable sum for attorney's fees.

12. If any provision or application of this NOTE AND AGREEMENT is held invalid by a court of law, such invalidity shall not affect other provisions or applications of this NOTE AND AGREEMENT which can be given effect without the invalid provision or application, and to this end the provisions of this NOTE AND AGREEMENT are severable.

13. In the event the PROPERTY is sold pursuant to a Power of Sale under a Deed of Trust encumbering the PROPERTY or under any other lien encumbering the PROPERTY, this NOTE AND AGREEMENT shall terminate and become void. Any payments of surplus proceeds from such sale received by BUYER shall be paid by BUYER to CALTRANS.

Dated: _____

_____
BUYER

By _____

_____
CALTRANS

By _____

(Notary acknowledgments must be attached
per Civil Code Section 1180 et seq.)

Space above this line for Recorder's Use

DEED OF TRUST

This Deed of Trust, Made this _____ day of _____, 19__, between _____ _____ herein called TRUSTOR, _____ _____ herein called TRUSTEE, and the STATE OF CALIFORNIA, DEPARTMENT OF TRANSPORTATION, herein called BENEFICIARY, Witnesseth: That TRUSTOR irrevocably GRANTS, TRANSFERS AND ASSIGNS TO TRUSTEE IN TRUST, WITH POWER OF SALE, that property in the County of _____ State of California, described as:

TOGETHER WITH the rents, issues and profits thereof, SUBJECT, HOWEVER, to the right, power and authority hereinafter given to and conferred upon Beneficiary to collect and apply such rents, issues and profits.

For the Purpose of Securing payment of the indebtedness evidenced by a NOTE AND AGREEMENT, of even date herewith, executed by Trustor _____, lawful charge made by Beneficiary for a statement regarding the obligations secured hereby requested by or for Trustor, and the performance of each agreement herein contained.

A. To protect the security of this Deed of Trust, Trustor agrees:

1. To keep said property in good condition and repair; not to remove or demolish any building thereon; to complete or restore promptly and in good and workmanlike manner any building which may be constructed, damaged or destroyed thereon and to pay when due all claims for labor performed and materials furnished therefor; to comply with all laws affecting said property or requiring any alterations or improvements to be made thereon; not to commit or permit waste thereof; not to commit, suffer, or permit any act upon said property in violation of law; to cultivate, irrigate fertilize, fumigate, prune, and do all other acts which from the character or use of said property may be reasonably necessary, the specific enumerations herein not excluding the general.

2. To provide, maintain, and deliver to Beneficiary fire insurance satisfactory to and with loss payable to Beneficiary. The amount collected under any fire or other insurance policy may be applied by Beneficiary upon any indebtedness secured hereby and in such order as Beneficiary may determine, or at option of Beneficiary the entire amount so collected or any part thereof may be released to Trustor. Such application or release shall not cure or waive any default or notice of default hereunder or invalidate any act done pursuant to such notice.

3. To appear in and defend any action or proceeding purporting to affect the security hereof or the rights or powers of Beneficiary or Trustee; and to pay all costs and expenses, including cost of evidence of title and attorney's fees in a reasonable sum, in any such action or proceeding in which Beneficiary or Trustee may appear.

4. To pay: at least ten (10) days before delinquency all taxes and assessments affecting said property, including assessments on appurtenant water stock; when due, all encumbrances, charges and liens, with interest, on said property or any part thereof, which appear to be prior or superior hereto; all costs, fees and expenses of this Trust.

5. To pay immediately and without demand all sums expended by Beneficiary or Trustee pursuant to the provisions hereof, with interest from date of expenditure at seven per cent per annum.

6. Should Trustor fail to make any payment or to do any act as herein provided, then Beneficiary or Trustee, but without obligation so to do and without notice to or demand upon Trustor and without releasing Trustor from any obligation hereof, may: make or do the same in such manner and to such extent as either may deem necessary to protect the security hereof, Beneficiary or Trustee being authorized to enter upon said property for such purposes; appear in and defend any action or proceeding purporting to affect the security hereof or the rights or powers of Beneficiary or Trustee; pay, purchase, contest, or compromise any encumbrance, charge or lien which in the judgment of either appears to be prior or superior hereto; and, in exercising any such powers, or in enforcing this Deed of Trust by judicial foreclosure, pay necessary expenses, employ counsel and pay counsel's reasonable fees.

B. It is mutually agreed that:

1. Any award of damages in connection with any condemnation for public use of or injury to said property or any part thereof is hereby assigned and shall be paid to Beneficiary who may apply or release such moneys received in the same manner and with the same effect as above provided for disposition of proceeds of fire or other insurance.

2. By accepting payment of any sum secured hereby after its due date, Beneficiary does not waive the right either to require prompt payment when due of all other sums so secured or to declare default for failure so to pay.

3. At any time or from time to time, without liability therefor and without notice, upon written request of Beneficiary and presentation of this Deed of Trust and said note for endorsement, and without affecting the personal liability of any person for payment of the indebtedness secured hereby, Trustee may: reconvey all or any part of said property; consent to the making of any map or plat thereof; join in granting any easement thereon; or join in any extension agreement or any agreement subordinating the lien or charge hereof.

4. Upon written request of Beneficiary stating that all sums secured hereby have been paid, and upon surrender of this Deed of Trust and said note to Trustee for cancellation and retention and upon payment of its fees, Trustee shall reconvey, without warranty, the property then held hereunder. The recitals in any reconveyance executed under this Deed of Trust of any matters or facts shall be conclusive proof of the truthfulness thereof. The grantee in such reconveyance may be described as "the person or persons legally entitled thereto."

5. As additional security, Trustor hereby gives to and confers upon Beneficiary the right, power, and authority, during the continuance of these Trusts, to collect the rents, issues and profits of said property, reserving unto Trustor the right, prior to any default by Trustor in payment of any indebtedness secured hereby or in performance of any agreement hereunder, to collect and retain such rents, issues and profits as they become due and payable. Upon any such default, Beneficiary may at any time without notice, either in person, by agent, or by a receiver to be appointed by a court, and without regard to the adequacy of any security for the indebtedness hereby secured, enter upon and take possession of said property or any part thereof, sue for or otherwise collect such rents, issues and profits, including those past due and unpaid, and apply the same, less costs and expenses of operation and collection, including reasonable attorney's fees, upon any indebtedness secured hereby, and in such order as Beneficiary may determine. The entering upon and taking possession of said property, the collection of such rents, issues and profits and the application thereof as aforesaid, shall not cure or waive any default or notice of default hereunder or invalidate any act done pursuant to such notice.

6. Upon default by Trustor in payment of any indebtedness secured hereby or in performance of any agreement hereunder, all sums secured hereby shall immediately become due and payable at the option of the Beneficiary. In the event of default, Beneficiary may employ counsel to enforce payment of the obligations secured hereby, and shall execute or cause the trustee to execute a written notice of such default and of Beneficiary's election to cause to be sold the herein described property to satisfy the obligations hereof, and shall cause such notice to be recorded in the office of the Recorder of each county wherein said real property or some part thereof is situated.

Prior to publication of the notice of sale, Beneficiary shall deliver to Trustee this Deed of Trust and the Note or other evidence of indebtedness which is secured hereby, together with a written request for the Trustee to proceed with a sale of the property described herein, pursuant to the provisions of law and this Deed of Trust.

Notice of sale having been given as then required by law, and not less than the time then required by law having elapsed after recordation of such notice of default, Trustee, without demand on Trustor, shall sell said property at the time and place fixed by it in said notice of sale, either as a whole or in separate parcels and in such order as it may determine, at public auction to the highest bidder for cash in lawful money of the United States, payable at time of sale. Trustee may postpone sale of all or any portion of said property by pubic announcement at such time and place of sale, and from time to time thereafter may postpone such sale by public announcement at the time and place fixed by the preceding postponement. Trustee shall deliver to the purchaser its deed conveying the property so sold, but without any covenant or warranty, express or implied. The recitals in such deed of any matters or facts shall be conclusive proof of the truthfulness thereof. Any person, including Trustor, Trustee, or Beneficiary, may purchase at such sale.

After deducting all costs, fees and expenses of Trustee and of this Trust, including cost of evidence of title and reasonable counsel fees in connection with sale, Trustee shall apply proceeds of sale to payment of: all sums expended under the terms hereof, not then repaid, with accrued interest at seven percent per annum; all other sums then secured hereby; and the remainder, if any, to the person or persons legally entitled thereto.

7. This Deed of Trust applies to, inures to the benefit of, and binds all parties hereto, their heirs, legatees, devisees, administrators, executors, successors, and assigns. The term Beneficiary shall mean the holder and owner of the note secured hereby; or, if the note has been pledged, the pledgee thereof. In this Deed of Trust, whenever the context so requires, the singular number includes the plural.

8. Trustee is not obligated to notify any party hereto of pending sale under any other Deed of Trust or of any action or proceeding in which Trustor, Beneficiary or Trustee shall be a party unless brought by Trustee.

9. Beneficiary may from time to time or at any time substitute a Trustee or Trustees to execute the trust hereby created, and when any such substitution has been filed for record in the office of the Recorder of the county in which the property herein described is situated, it shall be conclusive evidence of the appointment of such Trustee or Trustees, and such new Trustee or Trustees shall succeed to all of the powers and duties of the Trustee or Trustees named herein.

10. If all or any part of the Property or an interest therein is sold or transferred by Trustor without Beneficiary's prior express written consent, Beneficiary may, at Beneficiary's option, declare all the sums secured by this Deed of Trust to be immediately due and payable. Beneficiary shall have waived such option to accelerate if, prior to the sale or transfer, Beneficiary and the person to whom the Property is to be sold or transferred reach agreement in writing that the credit of such person is satisfactory to Beneficiary and that the interest payable on the sums secured by this Deed of Trust shall be at such rate as Beneficiary shall request. If Beneficiary has waived the option to accelerate provided in this Paragraph 10, and if Trustor's successor in interest has executed a written Assumption Agreement accepted in writing by Beneficiary, Beneficiary shall release Trustor from all obligations under this Deed of Trust and the note and agreement secured by this Deed of Trust.

    If Beneficiary exercises such option to accelerate, Beneficiary shall mail Trustor notice of acceleration. Such notice shall provide a period of not less than thirty (30) days from the date the notice is mailed within which Trustor may pay the sums declared due. If Trustor fails to pay such sums prior to the expiration of such period, Beneficiary may, without further notice or demand on Trustor, invoke any remedies permitted by this paragraph.

C. Request is hereby made that a copy of any Notice of Default and a copy of any Notice of Sale hereunder be mailed, pursuant to the provisions of Section 2924b of the Civil Code of California, to the trustor at the address shown under Trustor's signature.

TRUSTOR	TRUSTEE
Address _____	Address _____
TRUSTOR	BENEFICIARY
Address _____	Address _____

(Notary acknowledgments must be attached
per Civil Code Section 1180 et seq.)

Space above this line for Recorder's Use

DISTRICT	COUNTY	ROUTE	LOCATION	NUMBER

ASSUMPTION AGREEMENT

THE UNDERSIGNED, has acquired or is about acquire that certain real property described in a DEED OF TRUST dated _____, executed by _____ _____ as Trustor, and recorded _____ of Official Records of _____ County, California, which DEED OF TRUST was given to secure a NOTE AND AGREEMENT also dated _____, and payable to STATE OF CALIFORNIA, DEPARTMENT OF TRANSPORTATION, bearing interest at the rate of _____( )percent per annum with principal and interest payable as provided in said NOTE AND AGREEMENT; and the undersigned has agreed as part of the consideration for the conveyance to the undersigned of such real property to assume and pay the indebtedness evidenced by said NOTE AND AGREEMENT.

NOW, THEREFORE, in consideration of the premises and also to induce STATE OF CALIFORNIA, DEPARTMENT OF TRANSPORTATION not to exercise, in connection with said conveyance, the option contained in *Paragraph 10* on Page *3* of said DEED OF TRUST to accelerate maturity, the undersigned does hereby assume and agree to pay the indebtedness evidenced by said NOTE AND AGREEMENT and to pay and perform all the obligations, covenants and conditions mentioned in and secured by said DEED OF TRUST at the times and in the manner provided for in said NOTE AND AGREEMENT and said DEED OF TRUST. The undersigned is thoroughly familiar with all the terms and particulars of said NOTE AND AGREEMENT and DEED OF TRUST. The right to plead any and all statutes of limitations as a defense to said NOTE AND AGREEMENT or to any agreement to pay same or to any demand secured by said DEED OF TRUST or other security, securing said NOTE AND AGREEMENT is hereby expressly waived. Diligence, presentment, protest and demand, and notice of protest, dishonor and nonpayment of said NOTE AND AGREEMENT and any demands secured by said DEED OF TRUST are hereby waived.

STATE OF CALIFORNIA, DEPARTMENT OF TRANSPORTATION hereby releases _____ _____ from any and all liability or obligation under the aforesaid NOTE AND AGREEMENT and DEED OF TRUST.

THE UNDERSIGNED, STATE OF CALIFORNIA, DEPARTMENT OF TRANSPORTATION, being the owner and holder of the NOTE AND AGREEMENT and DEED OF TRUST described in this ASSUMPTION AGREEMENT in consideration of the assumption by _____ _____ and _____(his/her/their)_____ agreement to pay the indebtedness evidenced by said NOTE AND AGREEMENT and to pay and perform all of the obligations, covenants and conditions mentioned in and secured by said DEED OF TRUST at the times and in the manner provided for in said NOTE AND AGREEMENT and DEED OF TRUST and in consideration of the execution and delivery of this ASSUMPTION AGREEMENT to the undersigned, agrees that the undersigned will not, in this instance, exercise the option in *paragraph 10 on page 3* of said DEED OF TRUST to accelerate the indebtedness secured by said DEED OF TRUST. The nonexercise of such option in this instance shall not be deemed to be a consent to any other or future sale, conveyance or transfer which would come within the provisions of said NOTE AND AGREEMENT and said DEED OF TRUST nor shall be deemed a waiver of such right or of any right, privilege, or option reserved therein to the holder of said DEED OF TRUST. The undersigned hereby reserves all rights which it may now or hereafter acquire against any other parties who are or hereafter may become liable for payment of said NOTE AND AGREEMENT and/or payment or performance of the obligations, covenants, and conditions mentioned in or secured by said DEED OF TRUST.

DATE: _____ , 19 _____ .

STATE OF CALIFORNIA,
DEPARTMENT OF TRANSPORTATION

BY: _____

(Notary acknowledgments must be attached
per Civil Code Section 1180 et seq.)

RECORDING REQUESTED BY

AND WHEN RECORDED MAIL TO

Space above this line for Recorder's Use

SUBORDINATION AGREEMENT - FORM A

Loan No. _____

NOTICE: THIS SUBORDINATION AGREEMENT RESULTS IN YOUR SECURITY INTEREST IN THE PROPERTY BECOMING SUBJECT TO AND OF LOWER PRIORITY THAN THE LIEN OF SOME OTHER OR LATER SECURITY INSTRUMENT.

THIS AGREEMENT, made this _____ day of _____, 19___ by _____ _____, owner of the land hereinafter described and hereinafter referred to as "Owner", and _____, present owner and holder of the deed of trust and note first hereinafter described and hereinafter referred to as "Beneficiary";

WITNESSETH

THAT WHEREAS, _____ did execute a deed of trust, dated _____ _____, to _____, as trustee, covering:

(Description of Property - Including County)

to secure a note in the sum of $_____, dated _____, in favor of _____ _____ which deed of trust was recorded _____, as _____ Official Records of said county; and

WHEREAS, Owner has executed, or is about to execute, a deed of trust and note in the sum of $_____ _____, dated _____ in favor of _____ _____, hereinafter referred to as "Lender", payable with interest and upon the terms and conditions described therein, which deed of trust is to be recorded concurrently herewith; and

WHEREAS, it is a condition precedent to obtaining said loan that said deed of trust last above mentioned shall unconditionally be and remain at all times a lien or charge upon the land hereinbefore described, prior and superior to the lien or charge of the deed of trust first above mentioned; and

WHEREAS, Lender is willing to make said loan provided the deed of trust securing the same is a lien or charge upon the above described property prior and superior to the lien or charge of the deed of trust first above mentioned and provided that Beneficiary will specifically and unconditionally subordinate the lien or charge of the deed of trust first above mentioned to the lien or charge of the deed of trust in favor of Lender; and

WHEREAS, it is to the mutual benefit of the parties hereto that Lender make such loan to Owner; and Beneficiary is willing that the deed of trust securing the same shall, when recorded, constitute a lien or charge upon said land which is unconditionally prior and superior to the lien or charge of the deed of trust first above mentioned.

NOW, THEREFORE, in consideration of the mutual benefits securing to the parties hereto and other valuable consideration, the receipt and sufficiency of which consideration is hereby acknowledged, and in order to induce Lender to make the loan above referred to, it is hereby declared, understood and agreed as follows:

(1) That said deed of trust securing said note in favor of Lender, and any renewals or extensions thereof, shall unconditionally be and remain at all times a lien or charge on the property therein described, prior and superior to the lien or charge of the deed of trust first above mentioned.

(2) That Lender would not make its loan above described without this subordination agreement.

(3) That this agreement shall be the whole and only agreement with regard to the subordination of the lien or charge of the deed of trust first above mentioned to the lien or charge of the deed of trust in favor of Lender above referred to and shall supersede and cancel, but only insofar as would affect the priority between the deeds of trust hereinbefore specifically described, any prior agreements as to such subordination including, but not limited to, those provisions, if any, contained in the deed of trust first above mentioned, which provide for the subordination of the lien or charge thereof to another deed or deeds of trust or to another mortgage or mortgages.

Beneficiary declares, agrees, and acknowledges that:

(a) Beneficiary consents to and approves (i) all provisions of the note and deed of trust in favor of Lender above referred to, and (ii) all agreements, including but not limited to any loan or escrow agreements between Owner and Lender for the disbursement of the proceeds of Lender's loan;

(b) Lender in making disbursements pursuant to any such agreement is under no obligation or duty to, nor has Lender represented that it will, see to the application of such proceeds by the person or persons to whom Lender disburses such proceeds and any application or use of such proceeds for purposes other than those provided for in such agreement or agreements shall not defeat the subordination herein made in whole or in part;

(c) Beneficiary intentionally and unconditionally waives, relinquishes and subordinates the lien or charge of the deed of trust first above mentioned in favor of the lien or charge upon said land of the deed of trust in favor of Lender above referred to and understands that in reliance upon, and in consideration of, this waiver, relinquishment, and subordination specific loans and advances are being and will be made and, as part and parcel thereof, specific monetary and other obligations are being and will be entered into which would not be made or entered into but for said reliance upon this waiver, relinquishment and subordination; and

(d) An endorsement has been placed upon the note secured by the deed of trust first above mentioned that said deed of trust has by this instrument been subordinated to the lien or charge of the deed of trust in favor of Lender above referred to.

NOTICE: THIS SUBORDINATION AGREEMENT CONTAINS A PROVISION WHICH ALLOWS THE PERSON OBLIGATED ON YOUR REAL PROPERTY SECURITY TO OBTAIN A LOAN A PORTION OF WHICH MAY BE EXPENDED FOR OTHER PURPOSES THAN IMPROVEMENT OF THE LAND.

Beneficiary Owner

(Notary acknowledgments must be attached per Civil Code Section 1180, et seq.)

Space above this line for Recorder's Use

REQUEST FOR NOTICES OF DEFAULT AND SALE

In accordance with Section 2924b, Civil Code of the State of California, request is hereby made that a copy of any notice of default, and a copy of any notice of sale, under the deed of trust recorded _____, 19___, in Book _____ ____ of Official Records at page _____, Recorder's Serial No. _____, Records of the _____ County of _____, State of California, executed by _____ _____ as trustor, in which _____ _____ is named as beneficiary and _____ _____ as trustee, be mailed to:

_____
NAME

_____
STREET ADDRESS

_____
CITY AND STATE

Dated: _____ , 19 ___ .

_____

_____

(Notary acknowledgments must be attached
per Civil Code Section 1180, et seq.)

Space above this line for Recorder's Use

DISTRICT	COUNTY	ROUTE	LOCATION	NUMBER

OWNER-OCCUPANT CERTIFICATION

The undersigned do hereby certify and declare as follows:

(1) That on _____, we were high bidders, at the price of $_____, at a public sale of the single family residence located at _____ _____ (PROPERTY) presently owned by the State of California, Department of Transportation (Caltrans).

(2) We acknowledge that our offer to purchase said PROPERTY was based upon the fact that we have represented to Caltrans that we intend to occupy said PROPERTY, as our residence, in keeping with the provisions of Section 54237(e) of the Government Code that gives priority to purchasers who will be owner occupants.

(3) In consideration of Caltrans executing escrow and other documents to complete the sale of the above-described PROPERTY to us, the undersigned do hereby reaffirm and restate that we have agreed to purchase said PROPERTY as owner-occupants, and not for the purposes of resale or rental.

We declare, under penalty of perjury, that the foregoing is true and correct.

Executed on _____, at _____

_____

Caltrans
by _____ _____
(BUYER)

_____
(BUYER)

(Notary acknowledgments must be attached per Civil Code Section 1180 et seq.)

STATE OF CALIFORNIA • DEPARTMENT OF TRANSPORTATION

NOTICE OF AFFORDABLE HOUSING RESALE PROGRAM

RW 16-22 (9/94)

Dear Purchaser:

Attached, pursuant to your request, is the following information regarding Caltrans Affordable Housing Resale Program:

1. Brief description of the program including resale controls.
2. *Application to Acquire Residence.*
3. *Income Certification* form.
4. Address of residence(s).

If you wish to be considered as a potential purchaser, please complete the attached forms and return them with a $10 application fee together with a copy of your latest Federal income tax return to the Caltrans address indicated below. If you have any questions, please write or call _____ at _____.

(Department of Transportation
address, City, State, ZIP
Telephone)

DESCRIPTION OF AFFORDABLE HOUSING RESALE PROGRAM

Sections 54235 through 54238.6 of the Government Code require the California Department of Transportation (Caltrans) to sell surplus single family residences in accordance with procedures which are meant to:

1. Preserve, upgrade, and expand the supply of housing available to persons and families of low or moderate income, and
2. Mitigate environmental effects, within the meaning of Article XIX of the California Constitution, caused by the removal of such housing by highway activities.

These procedures have resulted in the sale of a number of residences at a price which is affordable to low or moderate income families and less than market value. As a part of such sales, resale controls have been imposed by Caltrans to assure that the houses will remain affordable and available to low or moderate income families.

Purchasers in the resale program will also be able to buy at an affordable price, paying no more than 35 percent of their monthly income (after Federal income taxes) towards *all* housing expenses (mortgage payment, property taxes, mortgage insurance, utilities, property insurance, and maintenance).

APPLICATION TO ACQUIRE RESIDENCE

The undersigned do hereby apply for eligibility to acquire a single family residence at an affordable price (which would be less than market value) under Caltrans' Affordable Housing Resale Program.
If I (we) am (are) found eligible for this program, I (we) would prefer to buy a residence in the following location:

_____ (Address of available housing.)

_____ (Address of available housing.)

Owner _____ or renter _____ at present residence.

Attached for Caltrans' further processing are:

1. Completed and signed *income certification.*
2. Copy of my (our) latest Federal Income Tax Return.
3. $10 application fee.

ANNUAL CERTIFICATION OF OWNERSHIP CONDITIONS

A. Has owner leased or subleased the property, or any part thereof, or allowed parties other than Owner to live in the property, without the prior express written consent of Caltrans? (If "yes," specify.)

B. Except for purposes of repairing or maintaining the property, has Owner encumbered the property or any interest therein, in whole or in part, without the prior express written consent of Caltrans? (If "yes," specify.)

C. Has Owner added any substantial improvements to the property without the prior express written consent of Caltrans? (If "yes," specify.)

D. Has Owner sold, transferred, or assigned the property, or any interest therein, in whole or in part, or agreed to do so, except for transfers to the Owner's spouse or children occasioned by death or divorce of the Owner, without first complying with the procedures set out in Paragraph 6 of the *Right to Purchase Agreement?* (If "yes," specify.)

E. Has Owner maintained insurance on the property at a level of at least 80 percent of replacement cost and does such insurance policy name Caltrans as an additional insured?

F. Did Owner make any emergency or other repairs to the property during the past year? (If "yes," specify.)

STATE OF CALIFORNIA • DEPARTMENT OF TRANSPORTATION

NOTICE OF INTENT

RW 16-24 (9/94)

Co-Rte-PM: _____

Director's Deed: _____

In accordance with the terms and conditions of the RIGHT TO PURCHASE AGREEMENT BETWEEN CALTRANS AND BUYER which conveyed to the undersigned owner(s) certain real property located in _____ _____ County, California, commonly known as:_____ _____(PROPERTY), the undersigned current owner(s) of the above-mentioned PROPERTY hereby notifies Caltrans or its DESIGNEE of my/our intent to [] sell, [] transfer, or [] assign the PROPERTY at the price and the terms set forth in above-mentioned Agreement. This Notice shall automatically expire, unless Caltrans or its DESIGNEE deliver a NOTICE OF ACCEPTANCE to buyer(s) by personal delivery or certified mail, return receipt requested, postage prepaid, within sixty (60) calendar days after date of receipt by Caltrans.

Name(s) of Owner(s) (print) _____

_____

Dated: _____

Telephone Numbers: Home _____ Work _____

Executed this _____ day of _____ .

_____

Owner

_____

Owner

INSTRUCTIONS TO OWNER: After you have completed this Notice of Intent, personally deliver or mail it, postage prepaid, first class, certified, as follows:

(Insert Caltrans mailing address)

Caltrans will contact you to make arrangements to inspect the property so it can complete the Property Information Form. Upon completion, you will be requested to complete your portion of Part II.

STATE OF CALIFORNIA • DEPARTMENT OF TRANSPORTATION

PROPERTY INFORMATION FORM

RW 16-25 (9/94)

Co-Rte-PM: _____

Director's Deed: _____

PART 1. Property Information

A. General Information (to be completed by Caltrans Owner)

Type of Property: SFR _____ Other _____

Owner's Purchase Price $ _____ (Base Price) Escrow Closing Date _____

Number of Bedrooms _____ Number of Bathrooms _____ Square Footage _____

Monthly: Mortgage Payment $ _____ Taxes $ _____

Insurance $ _____

Substantial Improvements Made Since Purchase Date: _____

_____

Mortgage Liens Outstanding: 1st $ _____ 2nd $ _____

3rd $ _____

Name and Address of Lender(s): _____

_____

Phone Number _____ Contact Person _____

Type of Loans _____

Terms of Loans (Interest Rate, Down Payment Required, Down Payment Made, Loan Assumable?, Outstanding Principle on Loan, etc.)

_____

_____

_____

Prepayment Required on First Trust Deed? Yes _____ No _____ Amount _____

An Inspection of the Property Can be Made on _____ at _____

(date) (time)

B. Schedule of Necessary Repairs, Rehabilitation or Replacement (to be completed by Caltrans or Designee)

1. Cleaning/Painting: _____
   Estimate of Cost: $ _____
2. Plumbing/Electrical Repairs: _____
   Estimate of Cost: $ _____
3. Replacing Worn Carpets/Draperies: _____
   Estimate of Cost: $ _____
4. Appliance Repairs: _____
   Estimate of Cost: $ _____
5. Structural and Mechanical Repairs: _____
   Estimate of Cost: $ _____
6. Other Repairs Needed: _____
   Estimate of Cost: $ _____

C. Sales Price Calculation (to be completed by Caltrans)

Type of Deed Restriction: _____

Median Income Prevailing on Date Escrow Closed: $ _____

Median Income Prevailing on Date Notice of Intent Received: $ _____

Percentage Increase in Median Income: _____ %

Owner's Purchase Price $ _____ (Base Price) X Percentage Increase in Median Income % = Adjusted Base Price $ _____

Adjusted Base Price: $ _____ Plus:

Substantial Improvements: $ _____ (Verification Attached _____)

Equals Gross Option Price: $ _____

D. Net Option Price (Estimated) $ _____

Gross Option Price

Less:

1. Unpaid balance on Deed of Trust at close of escrow: $ _____ (Estimated)
2. Fix-up costs (if not provided by Owner): $ _____
3. Liens, encumbrances at close of escrow and prorated current real estate taxes: $ _____ (Estimated)
4. Three percent of gross option price: $ _____
5. Escrow, title, and closing costs paid by Owner $ _____ (Estimated)

Subtotal

$ _____

Net Option Price (Estimated)

$ _____

PART II: DECLARATIONS, ACKNOWLEDGMENTS, AND SIGNATURES

A. To be completed by Owner:

1. Owner hereby declares under penalty of perjury that the information submitted in Part I above is complete, true, and correct;
2. Owner hereby acknowledges that the Sales Price Calculation as determined by Caltrans in Part I C above has been reviewed and is agreed to;

_____ _____

Owner's Signature Date

_____ _____

Owner's Signature Date

B. To be completed by Caltrans:

1. Caltrans hereby declares that the information submitted in Part I B, C and D above is true and correct;
2. Caltrans hereby acknowledges that the RIGHT TO PURCHASE will be exercised or abandoned within sixty days from date of receipt of Notice of Intent.

Caltrans

By _____ _____

Date

STATE OF CALIFORNIA • DEPARTMENT OF TRANSPORTATION

NOTICE OF ACCEPTANCE

RW 16-26 (9/94)

Co-Rte-PM: _____

Director's Deed: _____

Caltrans or its DESIGNEE hereby notifies _____ _____ (Owner(s)) of its intent to purchase that certain real property located in _____ County, California commonly known as _____ _____ (PROPERTY). Said purchase shall be pursuant to the terms and conditions as set forth in that certain RIGHT TO PURCHASE AGREEMENT BETWEEN CALTRANS AND BUYER dated _____ .

Caltrans

By _____

Dated: _____

Owner(s) hereby confirm(s) that a copy of this NOTICE OF ACCEPTANCE has been personally delivered.

Executed this _____ day of _____ .

_____

OWNER

_____

OWNER

Space above this line for Recorder's Use

DISTRICT	COUNTY	ROUTE	LOCATION	NUMBER

NOTICE OF ABANDONMENT OF RIGHT TO PURCHASE

This Notice is executed the date set forth below by the State of California, Department of Transportation (Caltrans) pursuant to the terms of that certain Right to Purchase Agreement dated _____, 19___ and recorded _____ _____, 19__ as Instrument No. _____ in Book _____, Page(s) _____ of the Official Records of _____ County, California.

The property commonly known as _____ is hereby released from the terms, covenants, conditions and encumbrances of the above-mentioned Agreement and no further action on the part of Caltrans is required to effectuate such release.

Executed this _____ day of _____ 19__.

Department of Transportation

BY _____

STATE OF CALIFORNIA • DEPARTMENT OF TRANSPORTATION

EXCESS LAND INVENTORY MEMORANDUM

RW16-28 (New 3/96)

TO: Accounting Service Center
Right of Way Program Accounting

Attention: _____

FROM: RIGHT OF WAY EXCESS LAND

Federal Project #
FEDERAL PARTICIPATION ON THE EXCESS PARCEL
☐ Yes ☐ No

_____
Dist Co Rte

_____ _____
Parcel EA

Please record the following excess land entries shown in Part I:

Part I: Excess Land VTA Transaction/Adjustments (Check appropriate item)	Code EL M	Code TC	Existing VTA on inventory	New VTA on inventory	Expenditure Adj. needed? Y=Use Part II	Optional Attach document if research required
Create: ☐ By new acquisition	1	899		$	No	RW 8-16, 16-1
☐ By design change	1	899		$	Yes	RW 8-16, 16-1
☐ Decertification of R/W or ☐ Operational property (1)	1	899		$	Yes	RW 8-16, 16-1
☐ By route rescission	7	899		$	Yes	RW 8-16, 16-1
☐ By parcel split Use only for newly created parcel. Original VTA adjusted with ELM code 4.	6	899		$	No	None
Adjust: VTA for existing parcels					See instructions on reverse	Revised RW 16-1 RW 8-16
☐ Increase *	4	899	$	$		
☐ Decrease *		900	$	$		
Return to inventory:						
☐ Option canceled	2	899		$	No	Transmittal
☐ Foreclosed parcel	8	899		$	No	RW 16-1
Incorp: ☐ Into right of way or ☐ Operational property (1)	3	900	$		Yes	RW 16-1
Delete: ☐ Parcel data in error *	5	900	$		No	None

(1) cc: Accounting (Fixed Assets), HQ Asset Management

Part II: TRAMS Expenditures Adjustments

Use funding fiscal year transaction occurred or, if lapsed, earliest year appropriation available.

DESCRIPTION	Area ☐ sq. ft ☐ sq. m. ☐ acre ☐ ha		Right of Way Amount of Federal Participation ($)				Accounting			
			Existing		Revised		Obj Code	Amount TC 243	Amount TC 243R	Prior F.Y.
	Existing	Revised	6-Elig	7-Inelig	6-Elig	7-Inelig		(+)	(-)	
Land:										
R/W							050			
Excess (2)							080			
Improvements										
R/W							050			
Excess (2)							080			
Net Damages							052			
Totals (3)										

(2) VTA amounts (3) Existing = Revised. If not, explain below.

Entered by:

* Explanation: _____

sign:

print: Excess Land Agent Date
Telephone:

EA Verified: (If expenditure adjustment needed)
sign:

print: R/W P&Mgmt. Date
Telephone:

PURPOSE:

To record VTA* transactions due to actions taken by RW Excess Land staff to **create, adjust, return, incorporate or delete** excess parcels.

Do not use this form for sales, exchanges or transfers to a State Agency. Enter only one transaction per form if Part II is used.

Part I - Prepared by District Right of Way Staff. If no applicable "federal project number" show "N/A". Be sure to show "yes" or "no" for excess parcel federal participation.

Part II - (Right of way Portion) also prepared by RW if a **"Yes"** appears in the "Expenditure Adjustment Needed?" Column of Part I.

"Adjust VTA For Existing Parcels" (ELM 4) has these cases:	Complete Part II (Expend. Adjust)?
- Parcel Split (Original Parcel)	**NO**
- Removal of Improvement	**NO**
- Correct error in VTA	**NO**
- Design Change	**YES**
- For other situations, please explain (As Required)	

Enter "existing" and "revised" areas and amounts. The "amounts" entered for "Excess" should be the "VTA".* Totals for "existing" and "revised" data should equal; if not please explain.

Enter the Federal Participation amounts under the correct column: "6-eligible" or "7-ineligible".

For Part II entries, contact **District Planning & Management** (P & M) to verify that the EA number is valid in TRAMS. If required, P & M to establish a new number. P & M to sign and date the form where indicated to certify validity of EA.

R/W sends completed form to ASC** (retaining a copy until ASC returns original with completed accounting entries). R/W also records the transaction on their "Close The Loop" Log.

Program Accounting completes entries in shaded area. They **print** preparer's name and return to R/W originator**. If Part II Entries, be sure R/W completed "EA Verified" block.

* VTA (Value at Time of Acquisition) is basis by which ASC reports the Excess Land Inventory to FHWA and the Legislature.
Source: "Federal Participation Memo". (Acquisition RW 8-16)

** For decertifications of (or incorporations into) **operational property**, include property name and address in "Explanation". Send copies to Fixed Assets (ASC) and Headquarters Asset Management.
Note: "Operational Property" part of "Land & Building Account".

STATE OF CALIFORNIA • DEPARTMENT OF TRANSPORTATION

EXCESS LAND FISCAL TRANSMITTAL

RW 16-29 NEW 3/96

TO: **ACCOUNTING SERVICE CENTER**

Attention: ☐ Cashiering (Money Transmittal)
☐ R/W Receivables (Adjustments/Refunds)

Dist	Co	Rte	Post

FROM: RIGHT OF WAY EXCESS LANDS

DIRECTOR'S DEED #			

No. of Parcels

SUBJECT: SALE OF EXCESS LAND

SALE PRICE $ _____

☐ Cash Sale
☐ Informal Time Payment
☐ Credit Sale
☐ Local Agency _____ _____
Name EA

PURCHASER:	
Name	Address
Fed ID# (Credit sales only)	

CASHIERING: For deposit into Account 84 - Special Deposit Account

DEPOSIT
Amount $_____
Check or Money Order # _____

Accounting Date Stamp

RECEIVED FOR:

☐ Bid/Option Deposit
☐ Additional Option Deposit
☐ Balance of Down Payment (Credit Sale-Attach RW 16-1)
☐ Balance of Purchase Price (Cash Sale-Attach RW 16-1)
☐ 1% Extension Penalty Fee - Period Expires: _____
☐ Foreclosure Fees (EA _____)
☐ Decertification Deposit (EA 926 ___ ___ ___)
Acquisition Parcel No. _____
☐ Other* _____

Remit No._____

ACCOUNTS RECEIVABLE: For related transactions

Amount $_____

☐ Forfeiture of Deposit
☐ Refund of Decertification (EA 926 ___ ___ ___)
☐ Refund of Deposits*
☐ Other*
_____

Accounting to Complete: Date: _____ Check # _____ or Schedule # _____

*Remarks:

Cashiering Return to R/W Excess Land
Attention: _____
(Print Name)

Sign: >
Print: >
Excess Land Agent Date
Telephone:

EXCESS LAND FISCAL TRANSMITTAL

PURPOSE:

To document transmittal to Accounting Service Center of:

1. **Funds to Cashiering** that are received from a buyer in connection with the sale of excess land, decerts and fees.
2. **Requests to Accounts Receivable** regarding related adjustments, such as refunds or forfeiture of deposits.

INSTRUCTIONS: Excess Land staff completes the top of the form.

1. **Direct the RW 16-29 to either Cashiering or R/W Receivables.**
2. **Use only one form RW 16-29 for each transaction.** For example in a money transmittal: one RW 16-29 for the initial bid deposit, another one for any additional option deposits, etc.
3. **The director's deed number is the key identifier** for remitting monies and applying funds toward account receivable bills for excess land sales. Give the number of parcels in the disposal unit.
4. **Show the sales price and indicate the type of sale.**
5. **Give the purchaser's name and address.** For credit sales, enter the Federal I.D. number.
6. **For a sale on behalf of a local agency,** give the agency name and expenditure authorization (EA) number.

CASHIERING (MONEY TRANSMITTAL)

R/W Excess Land agent indicates the amount of the deposit and the check or money order number. Enter an "X" by **only one** of the money transmittals listed (use "remarks" to explain "other").

The agent signs and dates the form, gives a phone number and prints the name to whom the form should be returned. The agent then sends the R/W 16-29 with an attached check to Cashiering:

(1) With the balance of the down payment or purchase price, attach a copy of the R/W 16-1;
(2) For extension fee, show the extension period ending date;
(3) For decertification, show the complete EA for 926 __ __ __ and show the acquisition parcel number;
(4) For deposit of foreclosure fee, enter the applicable EA.

Headquarters Cashiering, upon receipt of the form RW 16-29, date stamp it, enter "Remit number", and make the deposit and related accounting entries.

(NOTE: If the Excess Land agent initially takes the funds and the RW 16-29 to the **District Cashier,** the District Cashier:

(1) Gives the agent a receipt,
(2) Date stamps the RW 16-29, and
(3) Forwards the funds and RW 16-29 to Headquarters Cashiering.)

Headquarters Cashiering then returns a copy of the stamped receipted RW 16-29 to R/W Excess Land and sends the original to Accounts Receivable (A/R) for processing.

Accounts Receivable (A/R), upon receipt of down payment balance or purchase price, prepares a bill for the sale, records the sales credit and returns a copy of the bill to R/W Excess Land. For decertification deposits or extension penalty fees, A/R prepares a bill for monies received from the buyer and returns a copy to R/W Excess Land for filing.

ACCOUNTS RECEIVABLE (ADJUSTMENTS/REFUNDS)

R/W Excess Land agent indicates the type of transaction requested fo Accounts Receivable (A/R) with the R/W 16-29.

(1) Enter an "X" by **only one** of the transactions listed.
(2) Enter **the amount of the transaction requested.**
(3) For refund of decertification, show the related expenditure authorization (EA) 926__ __ __ number.
(4) For "other" type of transaction, describe in "remarks".

The agent signs and dates the form, gives a phone number and prints the name to whom the form should be returned. The agent then sends the RW 16-29 to Accounts Receivable.

Accounts Receivable receives the RW 16-29.

(1) For **"forfeiture of deposit"**, A/R prepares a bill and makes accounting entries to record monies retained. A/R sends a copy of the bill and the RW 16-29 to R/W Excess Land for filing.

(2) For **"refund of decertification",** A/R requests Headquarters Accounts Payable to prepare a claim schedule for the refund and send the check to the buyer. A/R returns a file copy of the RW 16-29 (indicating the claim schedule date and number) to R/W Excess Land.

(3) For **"refund of deposits"**, A/R requests Headquarters Cashiering to issue the refund. Cashiering sends the check to the buyer, and returns a file copy of the RW 16-29 (indicating the refund check date and number) to R/W Excess Land.

CHAPTER 16

Excess Land
Table of Contents

EXHIBITS

Exhibit No.	Title
16-EX-1	Reserved
16-EX-2	Notice of Intent to Sell Excess Land
16-EX-3	CTC Resolution G-91, Lease of Excess Property
16-EX-4	Offer to Sell or Lease Surplus Land
16-EX-5	Option Agreement - Access to Landlocked Excess Land
16-EX-6	CTC Resolution G-98-22, Procedure for Sale of Excess Property (Amending Resolution G-2 and Replacing Resolution G-97-12)
16-EX-7	Installment Contract for Sale of Real Property
16-EX-8	Section 9, Article XIX, State Constitution
16-EX-9	CTC Resolution G-3, Porter Bill Leases
16-EX-10	Request for Consideration, Porter Bill Lease
16-EX-11	Porter Bill Lease
16-EX-12	Instructions for Use of Porter Bill Lease Format
16-EX-13	Certification of Conformance, Porter Bill Lease
16-EX-14	Supplemental Data Sheet, Porter Bill Lease
16-EX-15	Agreement for Transfer of Control and Possession
16-EX-16	"Boiler Plate" for Deed of Trust
16-EX-17	Escrow Instructions
16-EX-18	Table of Income Limits SB 86
16-EX-19	Request for Copy of Tax Form – IRS SB 86
16-EX-20	Board of Equalization Letter to County Assessors SB 86
16-EX-21	Sample Notification for Newspapers SB 86
16-EX-22	Sample Newspaper Notification for Low and Moderate Income Households SB 86
16-EX-23	Excess Land Parcel File - Minimum Contents
16-EX-24	Decertification Process

STATE OF CALIFORNIA • DEPARTMENT OF TRANSPORTATION

EXHIBIT
16-EX-2

NOTICE OF INTENT TO SELL EXCESS LAND

(Form #)

Memorandum

To :

Date:

File : Dist. Co. Rte.
Director's Deed No.

From : **DEPARTMENT OF TRANSPORTATION**

Subject : Notice of Intent to Sell Excess Land

The Department of Transportation intends to sell the above-referenced parcel during the month of _____, 19 ____.

Attached are maps showing the location and area of the parcel. The following facts pertain to the property:

1. Estimated Value:
2. Present Zoning:
3. Highest and Best Use:
4. Topography:
5. Improvements (if any):
6. Encumbrances: (Brief description or enclose title report)
7. Remarks: (Include access problems, utility availability, other State-owned property adjacent, etc.)

Please determine if any other State agency wishes to acquire this parcel. If so, they could contact _____ at CALNET No. _____ immediately.

If we do not hear from any other agency within 60 days of your receipt of this letter, the parcel will be sold as scheduled.

_____
District Excess Land Manager

_____
(Address)

November 1, 1982

RESOLUTION NO. G-91

WHEREAS, Sections 118 and 118.6 of the Streets and Highways Code provide that whenever the Department determines that any real property or interest therein, heretofore or hereafter acquired by the State for transportation purposes, is no longer necessary for such purposes, the Department may sell, contract to sell, sell by trust deed, exchange or lease pending the sale or exchange of such real property or interest therein in the manner and upon the terms, standards and conditions established by the Commission; and

WHEREAS, Sections 54220 through 54227 of the Government Code provide that any agency of the state shall, prior to disposing of excess real property offer to lease such property to specified governmental agencies for park, recreational, open-space or low- and moderate-income housing purposes;

NOW, THEREFORE, BE IT RESOLVED, that the California Transportation Commission hereby authorizes the Department to enter into leases with public agencies without specific California Transportation Commission approval of each lease whenever;

- The Department finds that the lessee is a public entity as defined in Government Code Section 54222.
- The Department finds that the lease will be for park, recreational, open-space or low- and moderate-income housing purposes.
- The Department receives fair market rent for the property with adjustments yearly based upon the Consumer Price Index; and
- The Department expeditiously offers the excess property for sale subject to such lease.

Dist. Co. Rte. _____

Director's Deed No. _____

The Department of Transportation hereby offers to sell or lease the surplus land shown on the attached map in accordance with the provisions of Sections 54220 through 54227 of the Government Code.

The following facts pertain to this land:

1. Size:
2. Present Zoning:
3. Highest and Best Use:
4. Topography:
5. Improvements (if any):
6. Encumbrances: (Brief description or enclose title report.)
7. Remarks: (Include access problems, utility availability, other State-owned property adjacent, etc.)

A. Sale at Fair Market Value or Lease Pending Sale at Fair Market Value

Any sale pursuant to the above-noted statutes will be at current appraised fair market value.

Any lease pursuant to these statutes will be at a lease rate which will enable subsequent sale, subject to the lease, for a price no less than the current appraised fair market value of the parcel as if it were unencumbered by any lease.

B. Notification of Intent to Purchase or Lease Surplus Land

Please notify the undersigned within sixty (60) days of your receipt of this notice if you intend to purchase or lease this surplus land.

If we do not hear from your agency within sixty (60) days, the surplus land will be disposed of in another manner.

C. Resale of Land for Development of Low- and Moderate-Income Housing

Government Code Section 54224 allows a local agency, housing authority or redevelopment agency to reconvey land purchased from the Department to a nonprofit or for-profit housing developer for development of low- and moderate-income housing.

D. Payment Period

Government Code Section 54225 allows the Department to provide for a payment period of up to twenty (20) years in any contract of sale or sale by trust deed as to:

1. Surplus land to be used for park, recreation, open-space purposes, or school purposes, and
2. Improved surplus land to be used for low- and moderate-income housing purposes.

Streets and Highways Code Section 118 allows the Department to provide for a payment period of up to forty (40) years in any contract of sale or sale by trust deed as to unimproved surplus land to be used for low- and moderate-income housing purposes.

E. Multiple Offers

In the event the Department receives offers for the purchase or lease of this surplus land from more than one entity, first priority shall be given to the entity which agrees to use the site for housing for persons and families of low- or moderate-income, except that first priority shall be given to an entity which agrees to use the site for park or recreational purposes if the land being offered is already being used and will continue to be used for park or recreational purposes, of if the land is designated for park and recreational use in the local general plan and will be developed for that purpose. (Government Code Section 54227.)

If a notice of intent to purchase or lease this surplus land is received within sixty (60) days of receipt of this letter, Caltrans will prepare an appraisal of the surplus land.

Upon completion of the appraisal, Caltrans will commence negotiations with your agency pursuant to Government Code Section 54223 regarding the sale or lease of the land. If the price or lease terms cannot be agreed upon after a sixty (60) day negotiations period, the Department may dispose of the land without further regard to Government Code Sections 54220 through 54227.

District Excess Land Manager

(Address)

OPTION AGREEMENT - ACCESS TO LANDLOCKED EXCESS LAND

(Form #)

This Agreement made and entered into by and between _____, hereinafter called Optionor, and the State of California, Department of Transportation, hereinafter called Optionee.

In consideration for the sum of _____ dollars ($) paid to Optionor, the receipt of which is hereby acknowledged, Optionor hereby grants to Optionee or its assigns the exclusive right and option to purchase the following described real property in the County of _____, in the State of California, to wit:

(Insert Legal Description)

for the sum of _____ dollars ($), which shall be paid upon the delivery of a deed, as hereinafter provided.

Written notice exercising this option shall be given on or before _____, 19__, upon receipt of said notice and receipt of the sums herein provided, Optionor shall delivery to Optionee, or a mutually acceptable escrow agent, a Grant Deed to said real property.

_____ shall furnish a policy of title insurance of said real property.

All taxes, liens, or assessments shall be prorated between the parties to the date of delivery of the deed of conveyance.

All notices provided for herein shall be deemed to have been duly given if and when deposited in the United States mail, properly stamped and addressed to the party for whom intended at the party's above listed address, or when delivered personally to such party.

This contract shall be binding upon and shall inure to the benefit of the parties hereto and to their respective heirs, successors, or assigns.

It is understood, by and between the parties hereto, that the Optionee intends to assign this option to the purchaser of the landlocked State owned property which lies adjacent thereto, and that said purchaser shall have the right to exercise this option in accordance with the terms and conditions set forth herein.

Executed this _____ day of _____, 19__.

_____
Optionor

Instructions:

1. Fill in name and address of the vested owner of the property over which the access will be obtained.

2. Insert the address of the District Office of Right of Way.

3. Insert the written amount of the total sum to be paid for the option only by the State, followed by the numerical amount.

4. Insert the County wherein the property is located.

5. A full description of the property optioned will be included, and will be exactly as proposed to be acquired. This description will be prepared by District Right of Way Engineering. It may also be attached as an exhibit by reference.

6. Insert the total amount to be paid by the optionee for the property being purchased, exclusive of the consideration paid by the State for the option itself. The written and numerical amounts will be included.

7. The number of days to exercise the option will be inserted here. Care should be taken to allow successful bidder (assignee of the option) sufficient time to exercise the option (usually no longer than 90 days, or variable with the main parcel's option period).

8. This period, usually 30 days, will allow the optionor to deposit a good and sufficient grant deed into escrow or to the optionee.

9. Insert either "optionor", "optionee", or its "assigns", as indicated by local real estate custom. In no way, however, will the State pay for these title fees.

10. At the time of execution of the option agreement by the optionor, the date should be filled in.

NOTE: This agreement assumes the conveyance of fee simple, unimproved properties for cash. Modification of the option agreement will be necessary if a different conveyance is contemplated.

RESOLUTION NO. G-98-22
Amending Resolution G-2
Replacing Resolution G-97-12

1.1 WHEREAS, Section 118 and Section 30410 of the Streets and Highways Code and Section 21636 of the Public Utilities Code provide that whenever the Department determines that any real property or interest therein, heretofore or hereafter acquired by the State for transportation purposes, is no longer necessary for such purposes, the Department may sell, contract to sell, sell by trust deed, or exchange such real property or interest therein in the manner and upon the terms, standards, and conditions established by the Commission; and

1.2 WHEREAS, the Department has acquired many parcels of real property which are of such size or shape as to give rise to a land use development not consistent with normal land use; and

1.3 WHEREAS, the Department has acquired many parcels of real property which would deprive the adjoining owner of access to a public highway; and

1.4 WHEREAS, the Department desires to offer the property no longer required for highway purposes to original owners still in occupancy; and

1.5 WHEREAS, the Department desires to sell excess real property directly to public agencies without calling for competitive bids.

2.1 THEREFORE BE IT RESOLVED, that in the disposal by sale of excess fee-owned parcels, not needed pursuant to Section 118 and Section 30410 of the Streets and Highways Code and Section 21636 of the Public Utilities Code, the Department of Transportation is hereby authorized, upon the terms and conditions hereinafter set forth, to sell the excess parcel to the owner of adjoining property without the necessity of calling for competitive sealed bids or selling same at public auction, whenever the Department of Transportation finds and determines that the following facts either under Findings A or B exist pertaining to such excess parcel:

A. FINDING A:

1. That the excess parcel is of such size or shape that it is below the average normal standard size and shape of other privately owned properties in the immediate neighborhood, and that if such parcel were sold to other than the adjoining owner, it would give rise to a land use development thereof which would be below and not consistent with the normal land use of such other properties in that neighborhood;

2. That the sale of such parcel to a party other than the adjoining owner may cause an undue or unfair hardship to such adjoining owner in the normal land use development or operation of his property;

3. That such parcel considered as a part of the adjoining property would have a higher and better use than under separate ownership.

4. That the fair market value of such parcel considered as a part of the adjoining property would be higher than under separate ownership;

OR

B. FINDING B:

That the sale of such excess parcel to other than the adjoining owner would deprive such adjoining owner of an existing vested right of access to a public highway and thereby create a possible cause of action against the Department of Transportation.

In the event the adjoining owner refuses to purchase such excess parcel for such consideration, the Department of Transportation may sell same by calling for competitive sealed bids, or sell the property at public auction, except in those cases where sale to another party would deprive an adjoining owner of an existing vested right of access to a public highway (Finding B), in which latter case the State shall retain title to the excess parcel.

In cases where excess land qualifies under Finding A or B and the abutting owner is unable to pay the value of the subject property in one payment, then the abutting owner may be permitted to acquire property under an informal program payment arrangement, the period of time not to exceed 18 months, and in the event the prospective purchaser is unable to consummate the transaction, the money paid and held in the Department of Transportation's suspense account shall be refunded. This policy shall only apply to parcels qualifying under Finding A or B and shall be used only when no other alternative is available; and

2.2 THEREFORE BE IT FURTHER RESOLVED, that in the disposal of excess fee-owned parcels, pursuant to Sections 118 and 30410 of the Streets and Highways Code and Section 21636 of the Public Utilities Code, the Department of Transportation is hereby authorized to sell to public agencies at their request, without calling for competitive bids, at a price representing the fair market value thereof, and upon a determination that such intended use shall be for public purposes; and

That this policy shall also apply to Transfers of Control and Possession of such property made to other State agencies pursuant to Section 14673 of the Government Code; and

2.3 THEREFORE BE IT FURTHER RESOLVED, that in all cases other than sales to adjoining owners, either under Finding A or B, or sales to public agencies, excess property shall be either sold by receipt of competitive sealed bids, or sale at public auction, or exchanged for other land required for transportation purposes; and

2.4 THEREFORE BE IT FURTHER RESOLVED, that the Department of Transportation is hereby authorized to offer to directly sell, at fair market value, any improved excess property to a former owner who has remained in occupancy; or to a residential tenant of a tenure of five years or more with all rent obligations current and paid in full; and

2.5 THEREFORE BE IT FURTHER RESOLVED, that the Department of Transportation is hereby authorized to approve on behalf of the Commission, the following:

A. All conveyances of excess property not capable of independent development with an estimated market value of $100,000 or less, excepting any conveyance of access rights only,

B. All documents which correct descriptions in prior conveyances or acquisitions; and

2.6 THEREFORE BE IT FURTHER RESOLVED, that the Department of Transportation is hereby authorized to offer an option to purchase excess property with an option period of up to two years when the Department deem sit to be in the best interests of the State;

2.7 THEREFORE BE IT FURTHER RESOLVED, that the payment of brokers' commissions be allowed to licensed real estate brokers as an inducement for selling excess property; and

2.8 THEREFORE BE IT FURTHER RESOLVED, that the Department of Transportation is hereby authorized to approve on behalf of the Commission all conveyances of surplus properties purchased 100 percent with funds provided by local tax-measure agencies where the Department of Transportation is obligated by prior agreement to return sales proceeds to the tax-measure agency; and

2.9 THEREFORE BE IT FURTHER RESOLVED, that the Department will adhere to the following guidelines in implementing Sections 2.5, 2.6, and 2.7 of this Resolution:

For Section 2.5

1. Continue to submit for CTC approval all conveyances of access rights only.

2. Maintain internal reports and report annually to the CTC on approved items delegated under the amended Resolution.

3. Establish procedures for delegating to the districts and to assure an audit capability for delegated sales.

4. Continue to use standard appraisal practices and levels of review for appraisals of all excess land disposals.

5. Include language in the Director's Deed for conveying excess land (or to correct prior conveyances or acquisitions) under the amended Resolutions stating the Department has been delegated such prior approval authority by the CTC.

For Sections 2.6 and 2.7:

1. Select properties for sale by broker participation, which will all be of high value or specialized and of a type infrequently marketed by the State. Thus the process will fit the parameters of Government Code Section 19130(b); i.e., "cannot be performed satisfactorily by civil service employees."

2. Have district staff prepare a marketing analysis and plan to show they will maximize the return from the proposed property disposal through the use of brokers or options to purchase. The Airspace Advisory Committee (AAC) will provide advice and assistance in developing marketing plans upon request of the Department.

3. Obtain prior FHWA approval to use an option to purchase to assure approval of any federal reimbursement.

4. Request AAC to review proposed "options to purchase" and any extensions.

5. Obtain CTC approval at the time an optionee acquires an option to purchase; and

2.10 THEREFORE BE IT FURTHER RESOLVED, that Attachments 7, 8, 9, and 18 to the Commission Resolution Continuing Policies and Delegations adopted by the California Transportation Commission on March 9, 1978, are hereby rescinded; and

2.11 THEREFORE BE IT FURTHER RESOLVED, that CTC Resolution G-2 is hereby amended, and CTC Resolution G-97-12 is hereby replaced.

Dist.-Co.-Rte.-PM

THIS AGREEMENT, made and executed in triplicate this _____ day of _____, 19__, by and between the STATE OF CALIFORNIA, acting by and through the Department of Transportation, hereinafter called "State", and the , hereinafter called "Purchaser".

WITNESSETH:

WHEREAS, Purchaser desires to purchase the hereinafter described real property, and;

WHEREAS, The Director of the Department of Transportation has heretofore found and determined, and does hereby find and determine, in accordance with the provisions of Section 118 of the Streets and Highways Code, that the hereinafter described real property was acquired for State highway purposes and is no longer necessary for highway purposes and is not now being used for highway purposes, and that the disposition of said hereinafter described property is in the best interests of the State;

NOW, THEREFORE, in consideration of the covenants and agreements herein contained and the performance thereof, it is mutually agreed as follows:

1. The State agrees to sell to Purchaser, and Purchaser agrees to purchase from the State that certain real property situated in the County of _____ described as:

(Insert same legal description as will be used in the Director's Deed, including reservation of access rights.)

The premises are to be conveyed subject to:

(a) Special assessments, if any, restrictions, easements of record.

(b) (Insert other items, such as easements yet to be conveyed out by State, reservations of mineral rights, etc.)

2. Purchaser agrees to pay for the said real property to State the principal sum of _____ dollars, ($), with interest thereon from the date hereof at the rate of _____ percent (_____%); principal and interest to be due and payable in annual installments as follows:

(a) On the date hereof, the sum of _____ dollars, ($), and on the day preceding the first anniversary of the date hereof, and annually thereafter, the sum of _____ dollars, ($) to be applied on the principal and interest agreed to herein, on the day preceding the _____ anniversary of the date hereof the
(third, fifth, etc.)
balance of the principal with interest thereon unless sooner paid in accordance with the provision for additional payments stated below; all installments being payable in lawful money of the United States of America and shall be delivered to the Department of Transportation at Post Office Box _____, _____, California, ____.

(b) Each annual installment shall be credited first on interest then due and the remainder on principal so credited.

(c) Purchaser may make additional payments on the principal at any time before final installment, and interest shall thereupon cease upon said principal so credited.

(d) If Purchaser should default in the payment of any annual installment, or any part thereof, when due as herein provided, and such default should continue for thirty (30) days after notice thereof in writing to Purchaser, the whole of said purchase price shall at the option of the State become forthwith due and payable.

(e) It is understood and agreed that the term of this agreement shall not exceed _____ (____) years and the Purchaser shall make payment in full including principal and interest within that period.

3. Purchaser agrees to pay all taxes and assessments which are and which may be levied or assessed against said premises.

4. Purchaser shall promptly pay, when due, all water, electric, gas and other utility bills and charges accruing or payable in connection with said premises during the term of this agreement, and to save State harmless therefrom.

5. Purchaser shall promptly pay all indebtedness incurred by acts of the Purchaser on the property on which may become a lien on said premises.

6. Purchaser may occupy, or permit said premises to be occupied, for the following uses and purposes only, for a period of (____) years from the date hereof: For use as (describe intended use such as park, parking lot, storage yard, etc.). Purchaser shall not sell, lease, convey, assign or transfer said property for private use during said period.

7. Purchaser shall not commit, suffer or permit any waste on said premises or any acts to be done thereon in violation of any laws or ordinances, and shall not use or permit the use of said premises for any illegal or immoral purposes.

8. Purchaser agrees to keep said premises in good order and safe condition at Purchaser's own cost and expense and the Purchaser agrees that full inspection of said described premises has been made and that State does not make any covenant respecting the condition of any improvements on said premises or make any agreement for alterations, improvements or repairs.

9. Purchaser agrees to indemnify and save harmless the State, its officers, agents and employees against any and all loss, damage and liability which may be suffered or incurred by the State, its officers, agents and employees and against any and all claims, demands and causes of action that may be made or brought against the State, its officers, agents and employees caused by, arising out of, or in any way connected with the condition, use or occupancy of said premises by Purchaser, its assigns, licensees, permittees or invitees.

10. This agreement is not assignable in whole or in part, either by operation of law or otherwise, without the prior written consent of State; provided that Purchaser may permit other persons to use said premises only for the purposes hereinabove stated.

11. Purchaser may immediately enter upon said premises and remain thereon and use said premises as above provided so long as Purchaser shall fulfill and perform all the agreements herein on its part to be fulfilled and performed, and no longer; and if purchaser should, at any time hereafter, violate or neglect to fulfill any of said agreements or be in default herein in any respect, and such default should continue for thirty (30) days after notice thereof in writing to Purchaser, State shall have the right to declare this agreement terminated and may retain whatever may have been paid on said contract, including principal and interest, and all improvements that may have been placed on said premises, as and for rental for the use of said premises by Purchaser and State may consider and treat Purchaser as its tenant holding over without permission and may take immediate possession of the premises and remove Purchaser and its agents therefrom, and Purchaser shall be liable to State for any damages incurred therein. In case of any such termination, Purchaser hereby agrees, upon demand of State, to quietly and peaceably surrender to State the possession of said premises and every part thereof. State, at any time following such termination, may sell and convey the premises, or any portion thereof, free and clear of any rights by Purchaser in and to said premises or improvements thereon.

12. All notices herein provided to be given, or which may be given, by either party to the other, shall be deemed to have been fully given when made in writing and deposited in the United States mail, registered or certified and postage prepaid, and addressed as follows: To Purchaser at _____ _____ and to State at _____. The address to which the notices shall or may be mailed as aforesaid to either party, may be changed by written notice given by either party to the other as hereinbefore provided, but nothing herein contained shall preclude the giving of any notice by personal service.

13. It is agreed and understood that this agreement shall cancel and terminate any prior lease or rental agreement by and between the parties hereto covering said premises as of the date hereof.

14. This agreement is contingent on obtaining a resolution of the California Transportation Commission pursuant to Streets and Highways Code Section 118, approving and authorizing the manner, terms and conditions of this agreement.

15. The Purchaser agrees that upon the default of any of the conditions contained herein it will pay all costs and expenses that may arise from the enforcing of this agreement whether by suit or otherwise, including a reasonable attorney's fee.

16. The Purchaser agrees to resume all risk of damage to or loss of any improvements on said premises; that no such damage or loss shall constitute a failure of consideration.

17. After full performance by Purchaser of all terms and conditions herein and upon full payment of principal and interest by Purchaser and acceptance thereof by State, State shall deliver to Purchaser a Director's Deed to the above-described premises subject to the exceptions and reservations as hereinabove set forth, and this agreement shall terminate and be of no further force and effect. It is agreed that the deed is to be in the form of Exhibit "A" attached to this agreement and made a part hereof. It is hereby understood that the right, title and interest in the property to be conveyed by this agreement shall not exceed that vested in the State of California, and that no policy of title insurance will be furnished by the State in connection with this transaction.

18. This document contains the entire agreement of the parties hereto and no obligation other than those set forth herein will be recognized.

19. It is mutually understood that time is of the essence of each and all of the provisions of this agreement.

20. This agreement may be terminated, and the provisions thereof may be, in writing, altered, changed, modified or amended by mutual consent of the parties hereto.

IN WITNESS WHEREOF, the parties hereto have caused this agreement to be executed in triplicate by their respective officers.

Purchaser	**STATE OF CALIFORNIA** **DEPARTMENT OF TRANSPORTATION**
_____	_____

COASTAL ZONE INITIATIVE

9. Transfer of surplus state property; coastal zone

Section 9. Notwithstanding any other provision of this Constitution, the Legislature, by statute, with respect to surplus state property acquired by the expenditure of tax revenues designated in Sections 1 and 2 and located in the coastal zone, may authorize the transfer of such property, for a consideration at least equal to the acquisition cost paid by the state to acquire the property, to the Department of Parks and Recreation for state park purposes, or to the Department of Fish and Game for the protection and preservation of fish and wildlife habitat, or to the Wildlife Conservation Board for purposes of the Wildlife Conservation Law of 1947, or to the State Coastal Conservancy for the preservation of agricultural lands.

As used in this section, "coastal zone" means "coastal zone" as defined by Section 30103 of the Public Resources Code as such zone is described on January 1, 1977. (Added November 7, 1978.)

Addition of this section, proposed by Assembly Constitution Amendment No. 71, 1977-78, was approved by the voters in the general election held November 7, 1978.

RESOLUTION NO. G-3

WHEREAS, Section 104.15 of the Streets and Highways Code provides that wherever land has been acquired pursuant to former Section 104.1 of the Streets and Highways Code or pursuant to Article 5 (commencing with Section 1240.410) of Chapter 3 of Title 7 of Part 3 of the Code of Civil Procedure, the Department of Transportation may, in its discretion, lease to a local agency for park purposes all or any portion of the remainder outside the boundary of the State highway or public work or improvement, but not beyond the next adjacent dedicated street, when such use will protect such highway, public work, or improvement and its environs, and will preserve its view, appearance, light, air and usefulness; and

WHEREAS, such lease shall be made in accordance with procedures, terms, and conditions to be prescribed by the California Transportation Commission;

NOW, THEREFORE BE IT RESOLVED that the California Transportation Commission finds it in the public interest to lease excess land to local agencies for park purposes provided that the terms and conditions for such lease include all of the following:

1. Provisions requiring the local agency to develop and maintain such portion of the remainder as a park.
2. Provisions that whenever such portion of the remainder is needed for State highway purposes, the lease shall terminate.
3. Provisions that whenever such portion of the remainder ceases to be used for park purposes, the lease shall terminate; and

BE IT FURTHER RESOLVED that the term of the lease shall be for a period of 50 years and only those excess parcels shall be leased where the fair rental value, taking into consideration the terms and conditions of the lease, substantially equals the value of the enhancement and benefit to the State highway in preserving its view, appearance, light, air, and usefulness. The rental rate shall be determined by taking into consideration the present value of the construction and maintenance of park improvements including any maintenance or landscaping costs undertaken by the Lessee within the State highway right of way which would otherwise be the obligation of the State; and

BE IT FURTHER RESOLVED that the Director of Transportation shall establish specific terms and conditions as deemed necessary and appropriate to protect the transportation facilities; and

BE IT FURTHER RESOLVED that Attachment 6 to the Commission Resolution Continuing Policies and Delegations adopted by the California Transportation Commission on March 9, 1978 is hereby rescinded.

STATE OF CALIFORNIA • DEPARTMENT OF TRANSPORTATION

EXHIBIT
16-EX-10

REQUEST FOR CONSIDERATION, PORTER BILL LEASE

(Form #)

To : District Director
Attention Right of Way Office

Date:

File:

Dist.-Co.-Rte.P.M. _____
Parcel No. _____
Interstate No. _____
Location _____
_____

From :

Subject : Request for Consideration of Lease of Excess Land Pursuant to Section 104.15 of the Streets and Highways Code

Request is hereby made to withhold from sale excess land outlined in red on the attached map upon the Department's preliminary finding that use of said property pursuant to the provisions of Section 104.15 of the Streets and Highways Code may provide commensurate benefits to the State highway preserving its view, appearance, light, air, and usefulness.

Upon approval of this request, we shall immediately proceed with preparation of a detailed plan and proposal in accordance with the Criteria, Terms, and Conditions of the California Transportation Commission for implementation of Section 104.15 of the Streets and Highways Code and submit said detailed plans and proposal within one year of the approval of this request.

It is understood that your approval of this request to withhold the excess from sale does not constitute approval of the proposal and that final determination shall be based upon approval from the Director of Transportation and the California Transportation Commission. (On Interstate Highways, final approval shall be subject to approval of participation by the Federal Highway Administration.)

It is our intention to use and develop the excess property in the following manner:

- Description of Proposed Improvement (Include Tentative Plot Plan)
- Estimated Cost of Development of the Portion Laying Within 200 Feet of the Nearest Boundary of the Public Work $_____
- Proposed Method of Financing the Project

Approval of this preliminary request is respectfully requested.

_____
(Applicant Agency)

By

_____

_____
(Title)

_____
(Date)

Lease for Park and Recreational Purposes
Pursuant to Section 104.15 of the Streets and Highways Code

WHEREAS, The Legislature has enacted Section 104.15 of the Streets and Highways Code to authorize the Department to lease to local agencies for park purposes such portion of the remainder of property acquired pursuant to Section 104.15 not to exceed 200 feet from the closest boundary of the State highway or public work or improvement, when such use will protect such highway, public work or improvement and its environs, and will preserve its view, appearance, light and usefulness in accordance with conditions prescribed by the California Transportation Commission; and

WHEREAS, The California Transportation Commission has prescribed certain procedures, terms, and conditions for the leasing of such property; and

WHEREAS, the (___local agency___) intends to develop a park upon said property;

IT IS, THEREFORE, AGREED that the State of California and the (___local agency___) hereby enter into a leasehold containing the following terms and conditions:

LEASE covering premises in the City of (_____), County of (_____).

THIS INDENTURE OF LEASE, made and entered into and effective this _____ day of _____, 20___, by and between the STATE OF CALIFORNIA, acting by and through its Department of Transportation, hereinafter called the LESSOR, and _____, hereinafter called the LESSEE:

WITNESSETH

That the Lessor, for and in consideration of the covenants, conditions, agreements, and stipulations hereinafter to be performed by the Lessee does hereby lease unto the said Lessee those certain premises situated in the City of _____, said land or interests [therein being shown on the map or plat attached hereto marked "Exhibit A," and by reference made a part hereof, and more particularly] described as follows:

[Description]

TO HAVE AND TO HOLD said premises, hereinafter called "the leased premises," together with appurtenances and easements belonging thereto for the term and on the conditions hereinafter set forth.

THE PARTIES HERETO COVENANT AND AGREE AS FOLLOWS:

1. TERM

The term of this lease shall be for a term of fifty (50) years beginning _____, and ending _____.

2. TERMINATION

This lease shall terminate upon the occurrence of any of the following events:

(a) All or any portion of the leased premises is required for State highway or other public transportation purposes, PROVIDED HOWEVER, that when all or any portion of the leased property is required for Highway purposes, the Lessor shall provide 180 days' notice of termination;

(b) All or any portion of the leased property ceases to be used for park purposes.

(c) In the opinion of the Director of Transportation the property is not maintained in such a manner as to protect and enhance the highway or public works and its environs, PROVIDED HOWEVER, that the Lessor shall notify the Lessee that the Director has determined that the property is not so maintained, stating the reasons for such determination, and PROVIDED FURTHER, that Lessee shall have a reasonable time, not to exceed one hundred eighty (180) days, to remedy the conditions or defects which formed the basis for the Director's determination.

It is understood and agreed that upon termination of this lease for any reason, Lessor shall not be obligated to provide replacement lands or facilities or compensation in any manner for the part taken or the remainder of the leased premises, PROVIDED HOWEVER, that if the Lessee has purchased adjoining property in conjunction with this lease, and if said adjoining parcel remains in the ownership of Lessee and continues to be used in conjunction with the leased premises, and if this lease is terminated for the reasons stated in 2(a) above, Lessee shall be entitled to recover from the acquiring agency severance damages, if any, to the extent that said adjoining parcel is damaged.

2. TERMINATION (Alternate)

This lease shall terminate upon the occurrence of any of the following events:

(a) All or any portion of the leased premises is required for State highway or other public transportation purposes, PROVIDED HOWEVER, that when all or any portion of the leased property is required for Highway purposes, the Lessor shall provide 180 days' notice of termination;

(b) All or any portion of the leased property ceases to be used for park purposes.

(c) In the opinion of the Director of Transportation the property is not maintained in such a manner as to protect and enhance the highway or public works and its environs, PROVIDED HOWEVER, that the Lessor shall notify the Lessee that the Director has determined that the property is not so maintained, stating the reasons for such determination, and PROVIDED FURTHER, that Lessee shall have a reasonable time, not to exceed one hundred eighty (180) days, to remedy the conditions or defects which formed the basis for the Director's determination.

It is understood and agreed that upon termination of this lease for any reason, Lessor shall not be obligated to provide replacement lands or facilities or compensation in any manner for the part taken or the remainder of the leased premises.

3. RENTAL

The Lessee agrees to pay Lessor as rent for the leased premises during the term the sum of _____ Dollars ($_____), payable annually in advance to the Lessor at the Office of the State of California, Department of Transportation, at _____, California, commencing on the _____ day of _____, 20___, and on the _____ day of _____ each year thereafter.

4. IMPROVEMENTS, REPAIRS, MAINTENANCE AND USE OF THE PROPERTY

Lessee agrees to develop a park upon the leased premises and to commence construction of said park, as approved by Lessor, no later than _____, 20___, and to complete said construction on or before _____, 20___. In the event construction is not commenced and completed in the time set forth above, or if not prosecuted with reasonable diligence to completion, this lease may be terminated at Lessor's option.

The Lessee, prior to the construction of any improvements on the leased premises, shall furnish a description of the proposed facility, including:

(a) Ten each - site plans and one duplicate tracing, at scale 1/20 inch to 1 foot on sheets 30 inch x 40 inch.
(b) Ten each - architectural elevations and one duplicate tracing, at scale 1/8 inch to 1 foot on sheets 30 inch x 40 inch.
(c) Specifications, including structural system, types of materials, exterior finishing, and landscaping.

All plans and specifications submitted by the Lessee to the Lessor shall be subject to the Lessor's review and approval, including but not limited to lighting facilities, and to means of ingress and egress to the property. Building improvements shall be limited to those included in the approved plan. No additional building improvements shall be allowed without prior written consent of the Lessor. All building improvements shall conform to local building codes and ordinances. All signs shall be subject to the prior approval of the Lessor. Any facilities constructed for the protection of the Lessor's facility shall be maintained in the conditions as approved in the plans.

Lessee further agrees that improvements constructed on the leased premises shall conform to approved plans and specifications referred to in Clause 4 - (a), (b), (c). It is further agreed and understood that the leased premises shall be used exclusively for park purposes, and the premises will not be used for other purposes or for purposes deemed by the Lessor to be a potential fire or other hazard to the highway facility. The operation and maintenance of leased premises shall be subject to regulations by the Lessor to protect against fire or other hazard impairing the use, safety and appearance of the highway. No change in use shall be permitted without the Lessee's first having obtained written approval from the Lessor. Lessee specifically understands that any change of use of the leased premises which is inconsistent with park purposes shall be considered as a material breach of this lease and the cause of forfeiture of the lease.

Lessee, at its sole cost and expense, shall comply with and faithfully observe in the construction and use of the premises the requirements of all Municipal, State, and Federal authorities now in force or which may hereinafter be in force pertaining to the leased premises.

Within ninety (90) days after completion of construction of the facilities, the Lessee shall furnish to the Lessor two sets of the plans and specifications used in said construction in detail, including the location of all underground and aboveground utility lines, as well as construction details.

The Lessee, at its own cost and expense, shall maintain the leased premises, including all buildings, structures, landscaping and improvements constructed thereon, and all driveways, fences, and guardrails heretofore, or hereafter erected in good repair at all times in an orderly, clean, safe, and sanitary condition in such a manner as to protect and enhance the abutting highway or public works and its environs and to preserve said highways' or public work's view, appearance, light, air, and usefulness, and otherwise in compliance with all requirements of law. A high standard of cleanliness consistent with the location of the area as an adjunct to the California highway system will be required. The Lessee shall take all steps necessary to effectively protect the fences and guardrails from damage incident to the Lessee's use of such land and improvements, all without expense to the Lessor. The Lessee shall be liable to and shall reimburse the Lessor within thirty (30) days after billing for any damage to said fences, guardrails, in any way resulting from or attributable to the use and occupancy of said premises by the Lessee or any person entering upon the same with the consent of the Lessee, expressed or implied. It is understood and agreed that the leased premises shall be used during the tenancy hereof exclusively for the purposes of a public park or uses compatible with such uses, including parking appurtenant to such park. No other use shall be permitted. Lessee shall not allow vehicle or equipment washing, fueling, maintenance or repair on the premises.

If all or any portion of the leased property is required for highway purposes and after written notice of termination is provided by Lessor, at its sole cost and expense, shall remove all building improvements within the highway right of way within 180 days of said notice of termination.

5. HAZARDOUS MATERIALS

Hazardous materials are those substances listed in California Code of Regulations, Title 22, Section 66261.126, Appendix X, or those which meet the toxicity, reactivity, corrosivity or flammability criteria of Article 11 of the above Code, as well as any other substance which poses a hazard to health or environment. Except as otherwise permitted in this Lease, Lessee shall not use, create, store or allow any such substances on the premises. Fuel stored in a motor vehicle for the exclusive use in such vehicle is excepted.

In no case shall Lessee cause or allow the deposit or disposal of any such substance on the leased property. However, household products necessary for routine cleaning and maintenance of the property may be kept on the leased premises in quantities reasonable for current needs.

Department, or its agents or contractors, shall at all times have the right to go upon and inspect the leased premises and the operations conducted thereon to assure compliance with the requirements herein stated. This inspection may include taking samples of substances and materials present for testing, and/or testing soils or underground tanks on the premises.

6. WATER POLLUTION CONTROL

Lessee shall not allow discharge of contaminated storm water runoff or unauthorized non-storm water discharges to private or public storm water drainage systems. Lessee shall comply with State and Federal water pollution control requirements, and those of municipalities, counties, drainage districts, and other local agencies regarding discharges of storm water and non-storm water to sewer systems, storm drain systems, or any watercourses under jurisdiction of the above agencies.

Lessee shall implement and maintain the best management practices (BMPs) shown in the attached Stormwater Pollution Prevention Fact Sheet for Parks and Recreation. Lessee shall identify any other potential sources of storm water and non-storm water pollution resulting from Lessee's activities on the premises, which are not addressed by the BMPs contained in the attached Fact Sheet, and shall implement additional BMPs to prevent pollution from those sources. Additional BMPs may be obtained from the Right-of-Way Property Management and Airspace Storm Water Guidance Manual (RW Storm Water Manual) available for review at the Department's District Right of Way office or online at: http://www.dot.ca.gov/hq/row/rwstormwater/. In the event of conflict between the attached Fact Sheet and this Lease, this Lease shall control.

Department, or its agents or contractors, shall at all times have the right to go upon and inspect the premises and the operations conducted thereon to assure compliance with the requirements herein stated. This inspection may include taking samples of substances and materials present for testing, and/or the testing of sewer systems, storm drains, or watercourses on the premises.

7. LIABILITY INSURANCE

This lease is made upon the express condition that Lessor is to be free from all liability and claims for damages by reason of any injury to any person or persons, including Lessee, or property of any kind whatsoever and to whomsoever belonging, including Lessee, from any cause or causes resulting from the operations and/or use of the premises by Lessee, his agents, customers and/or business invitees, Lessee hereby covenants and agrees to indemnify and save harmless Lessor from all liability, loss, cost and obligation on account of any such injuries or losses.

Lessee shall, at his own expense, take out and keep in force during the within tenancy, public liability insurance and property damage insurance in a company or companies to be approved by the Lessor, to protect the State of California, its officers, agents, and employees, as a named additional insured, against any liability to the public incident to the use of and resulting from injury to, or death of, any person or persons or property damage, including parked vehicles, occurring in, or about the demised premises, in the amount of not less than $1,000,000, to indemnify against the claim of one or more persons resulting from any one accident.

Said policies shall inure to the contingent liabilities, if any, of the Lessor, and the officers, agents, and employees of Lessor when acting within the course and scope of their employment, in its capacity as Lessor, and shall obligate the insurance carriers to notify Lessor, in writing, not less than fifteen (15) days prior to the cancellation thereof, or any other material changes affecting the coverage of the policies. Lessee shall furnish to Lessor a certified copy of each and every such policy within not more then ten (10) days after the effective date of the policy. Lessee agrees that, if Lessee does not keep such insurance in full force and effect, Lessor may take out insurance and pay the premiums thereon, and the repayment thereof shall be deemed to be additional rental and payable as such on the next day upon which rent becomes due hereunder.

Prior to occupying the leased premises the Lessee, as a condition of the lease, must furnish certificates of insurance. Said certificates, in blank, will be furnished to Lessee by Lessor upon request.

This paragraph nor any part of this lease is intended to create any rights or claims on the part of any person or persons who may claim to be a third party beneficiary of this lease or on the part of any person or persons who are not a party to this lease.

The purpose of this paragraph is to protect the State of California, its officers, agents, and employees against liability for personal injury, death of any person or persons, as well as property damage arising by reason of its position of owner and Lessor of the real property in question.

It is understood that the Lessor specifically reserves the right to increase the amount of public liability or property damage insurance required under this lease to the amount for which the Lessor is self-insured if the Lessor's self-insured limits are raised above $1,000,000. Upon thirty (30) days' written notice of a change in insurance requirements, Lessee must furnish additional certificates of insurance proving that it has complied with the new policy limits adopted by the Lessor.

7. LIABILITY INSURANCE (Alternate)

This lease is made upon the express condition that Lessor is to be free from all liability and claims for damages by reason of any injury to any person or persons, including Lessee, or property of any kind whatsoever and to whomsoever belonging, including Lessee, from any cause or causes resulting from the operations and/or use of the premises by Lessee, his agents, customers and/or business invitees, Lessee hereby covenants and agrees to indemnify and save harmless Lessor from all liability, loss, cost and obligation on account of any such injuries or losses.

The purpose of this paragraph is to protect the State of California, its officers, agents, and employees against liability for personal injury, death of any person or persons, as well as property damage arising by reason of its position of owner and Lessor of the real property in question.

8. TAXES OR ASSESSMENTS

It is understood and agreed that the Lessor shall not be liable for taxes or assessments of any nature whatsoever on the leased property and that Lessee will pay any such taxes or assessments should they arise.

9. CONDEMNATION CLAUSE

In the event it becomes necessary for the Lessor to acquire all or any portion of the leased premises for highway or other transportation uses, this lease may be terminated as provided in 2 above. The lessee specifically waives all defense to any condemnation action, PROVIDED HOWEVER, if the lease is terminated for other public transportation purposes that Lessee may claim compensation from the condemning authority based upon the value of its interest in the improvements constructed on the leased premises, in accordance with the laws of eminent domain.

10. DEFAULT BY LESSEE

Lessor shall exercise against Lessee any remedy which Lessor may have for breach of any covenant or agreement herein expressed only after Lessee has failed for a period of thirty (30) days after receipt of notice thereof to correct the condition of which complaint is made.

11. NOTICES

Any and all notices or demands by or from Lessor to Lessee, or Lessee to Lessor, shall be in writing. They shall be served either personally or by mail; service shall be conclusively deemed made at the time of service. If served by certified mail, service shall be conclusively deemed made forty-eight (48) hours after the deposit thereof in the United States mail, postage prepaid, addressed to the party to whom such notice or demand is to be given and the issuance of a receipt therefore. If served by telegraph, service shall be conclusively deemed made at the time the telegraph agency shall confirm to the sender delivery thereof to the addressee. Any notice or demand to Lessor may be given to Lessor at _____ or at such other place or places as shall be designated by Lessor from time to time. Any notice or demand to Lessee shall be given to Lessee at _____
_____
_____
_____

12. SUBLEASES, ASSIGNMENTS, ASSIGNMENTS BY OPERATION OF LAW AND ENCUMBRANCES

The Lessee may not sublease or assign any portion of said lease to any person, without the prior written consent of Lessor.

The Lessee covenants that no lien or other encumbrance shall be placed upon the leased premises or the improvements located thereon which will defeat the right of the Lessor under the lease herein. The Lessee further agrees that any loan which is secured by a lien on the leased premises or the improvements located thereon shall be made expressly subject to the prior leasehold rights of the Lessor contained herein.

No holding over by Lessee shall operate to renew this lease without the written consent of the Lessor endorsed thereon.

13. WAIVER

The waiver by Lessor by any breach of any term, covenant or condition herein contained shall not be deemed to be a waiver of such term, covenant or condition or any subsequent breach of the same, or any other term, covenant or condition herein contained. The subsequent acceptance of rent hereunder by Lessor shall not be deemed to be a waiver of any preceding breach by Lessee of any term, covenant or condition of this lease other than the failure of Lessee to pay the particular rental so accepted, regardless of Lessor's knowledge of preceding breach at the time of acceptance of such rental.

14. FAIR EMPLOYMENT PRACTICES

The Lessee, for itself, its personal representatives, successors in interest, and assigns, as a part of the consideration hereof, does hereby covenant and agree "as a covenant running with the land" that (1) no person, on the grounds of race, color, or national origin shall be excluded from participation in, be denied the benefits of, or otherwise subjected to discrimination in the use of said facilities, (2) that in connection with the construction of any improvements on said land and the furnishing of services thereon, no discrimination shall be practiced in the selection of employees and contractors, by contractors in the selection and retention of first-tier subcontractors, and by first-tier subcontractors in the selection and retention of second-tier subcontractors, (3) that such discrimination shall not be practiced against the public in their access to and use of the facilities and services provided for public accommodations (such as eating, sleeping, rest, recreation, and vehicle servicing) constructed or operated (on, over, or under) the space of the right of way, and (4) that the Lessee shall use the land in compliance with all other requirements imposed pursuant to Title 15, Code of Federal Regulations, Part 8 (15 CFR, Part 8) and as said Regulations may be amended. In the event of breach of any of the above nondiscrimination covenants, the Lessor shall have the right of termination of this lease, and to reenter and repossess said land and the facilities thereon, and hold the same as if said lease had never been made or issued.

15. TIME OF ESSENCE

Time is expressly made the essence of this lease.

IN WITNESS WHEREOF, the undersigned have executed this lease the day and year first above written.

STATE OF CALIFORNIA
DEPARTMENT OF TRANSPORTATION

By _____
LESSOR

_____

_____

By _____
LESSEE

**"Lease for Park and Recreational Purposes
Pursuant to Section 104.15 of the Streets and Highways Code"**

This form of lease is to be used in those cases involving only excess lands leased pursuant to Section 104.15. This format is not applicable to properties which constitute a combination of nonoperating right of way under the terms of the Marler-Johnson Highway-Park Act of 1969 and excess lands.

This lease format including Clauses 1 through 15 shall serve as a guideline for preparation of leases by the District. Note that Clause 2 dealing with termination and Clause 7 dealing with liability insurance contain optional clauses.

Instructions for use of lease format:

Preamble Clause –
This clause including exhibit map and description shall be used in all leases.

Clause 1 – Term
Due to the long term of the lease, commencement dates should be established at the first day of a month rather than a specific day within a monthly period. Commencement date should be left blank to allow for necessary action by the California Transportation Commission and is to be filled in after submission to the Director.

Clause 2 – Termination
Optional termination clauses are provided. These are identical except for the provision regarding severance damages to property purchased in connection with the lease premises. In those cases where the State requires the local agency to purchase adjoining property pursuant to the terms of the Act, the optional clause providing for severance damages in the event of termination shall be used. It is anticipated that in rare cases, modification of the termination clause used in conjunction with the leased premises may be requested. Such modifications shall be subject to the approval of the Division of Right of Way and the Director of Transportation. No modifications of Paragraphs A, B, or C will be permitted.

Clause 3 – Rental
Rent will normally be paid annually in advance. In very rare cases where the rental rate is high, provision may be made for monthly payments.

Clause 4 – Improvements, Repairs, Maintenance and Use of the Property
Dates to be used and this clause shall conform to the criteria established by the California Transportation Commission which requires commencement of construction within two years of approval of plans and completion of construction within three years of plan approval.

Clause 6 – Water Pollution Control
Attach the Stormwater Pollution Prevention Fact Sheet for Parks and Recreation to the lease. The Fact Sheet can be found in the Right-of-Way Property Management and Airspace Guidance Manual. It is also available on the Right of Way Storm Water Web site.

INSTRUCTIONS FOR USE OF PORTER BILL LEASE FORMAT (Cont.)
(Form #)

Clause 7 – Liability Insurance
Optional clauses are provided for liability insurance. The long form requiring purchase of liability insurance in the amount of not less than $1 million shall normally be used. However, in those cases where the local agency has substantial financial responsibility and already carries liability insurance in excess of $1 million, the short form optional may be used.

Clause 14 – Fair Employment Practices
Shall be used in all leases as minimum requirements. In those cases where the local agency must adhere to stricter practices and if requested, by the local agency, these additional requirements may be included in the lease.

CERTIFICATION OF CONFORMANCE, PORTER BILL LEASE

(Form #)

This is to certify that the application of _____
(Name of Local Agency)
dated _____ for the development of park and recreational facilities on excess parcel(s) _____ has been reviewed, and that the proposed development conforms to the requirements of Streets and Highways Code Section 104.15.

Recommended for Approval:

_____
District Porter Bill Review Committee

_____
District Director or District Division Chief
Right of Way

STATE OF CALIFORNIA • DEPARTMENT OF TRANSPORTATION

EXHIBIT
16-EX-14

SUPPLEMENTAL DATA SHEET, PORTER BILL LEASE

(Form #)

I. Identification:

Dist.-Co.-Rte.-P.M. _____
Excess Parcel No. _____
Excess Category _____
Interstate No. _____

Location (Street(s) _____
Applicant Agency

II. Physical Description:

A. Parcel (total Excess Parcel) _____
B. Area within 200 feet of the Public work _____
C. Describe highway construction and year completed _____
D. Topographic relationship of parcel to highway _____
E. Discuss existing or proposed highway landscaping plan _____
F. Distance from nearest traveled lane to excess _____
G. Describe visibility of excess from highway _____
H. Describe surrounding neighborhood use patterns and trends _____

III. Valuation Date : (Attach Appraisal)

A. Date of Acquisition _____
B. Cost of Acquisition of Entire Parcel $ _____
C. V.T.A. from RW 16-1 $ _____
D. F.M.V. of Entire Excess Parcel _____
E. F.M.V. of the excess property: To be purchased by local agency $ _____
F. Estimated value of excess within 200 feet of highway facility $ _____
G. Present Zoning _____
H. Highest and best use _____
I. Describe excess improvements and their location:
J. Describe effect of lease of 200 feet nearest highway improvement on salability or value of remaining excess and estimate dollar damage, if any:
K. Describe any present or future plans or intentions for improvement of highway facilities which would affect proposed park improvements:
L. Describe plans or expressed intentions for rapid transit or other public improvements at this location.

IV. District Recommendations:

A. Describe significant potential benefits of park development:
B. Describe potential dis-benefits of park development:
C. Recommendation of District Director:

V. Exhibits:

A. Maps-Area map showing location of the city. Parcel map showing total excess and area applied for.
B. Photos-of parcel from freeway and freeway from parcel.

The above items constitute minimum data required and additional appropriate information should be included in a "Comments" section, if needed.

STATE OF CALIFORNIA • DEPARTMENT OF TRANSPORTATION

EXHIBIT
16-EX-15

AGREEMENT FOR TRANSFER OF CONTROL AND POSSESSION OF STATE-OWNED REAL PROPERTY

(Form #)

This Agreement entered into this _____ day of _____ by and between the Department of Transportation, hereinafter called Transferor and the _____ called Transferee with the approval of the Director of General Services.

WITNESSETH:

WHEREAS, Transferor has control and possession of the hereinafter described real property, and

WHEREAS, Transferee desires to acquire control and possession of said real property and Transferor is willing to transfer said control and possession;

NOW, THEREFORE, pursuant to the provisions of Section 14673 of the Government Code of the State of California, Transferor hereby transfers unto Transferee and Transferee accepts the control and possession of the real property situated in the County of _____, State of California, described as follows:

(Here insert legal description, including reservation of access and other rights, if any.)

IN CONSIDERATION for said transfer, Transferee agrees to pay Transferor the sum of $_____.

IN WITNESS WHEREOF, the parties hereto have executed this agreement the date first above written.

State of California
Department of Transportation

By _____

(Transferee)

By _____

APPROVED:

Department of General Services

By _____

.....

THIS INFORMATION IS TO BE SHOWN ON DEPARTMENT OF TRANSPORTATION ARCHIVE COPY <u>ONLY</u>.

APPROVAL RECOMMENDED

_____
District Division Chief-Right of Way

DIVISION OF RIGHT OF WAY

By _____
Right of Way Agent

APPROVED AS TO FORM AND PROCEDURE:

By _____
Attorney

TO PROTECT THE SECURITY OF THIS DEED OF TRUST, TRUSTOR AGREES:

(1) To keep said property in good condition and repair; not to remove or demolish any building thereon; to complete or restore promptly and in good and workmanlike manner any building which may be constructed, damaged or destroyed thereon and to pay when due all claims for labor performed and materials furnished therefor; to comply with all laws affecting said property or requiring any alterations or improvements to be made thereon; not to commit or permit waste thereof; not to commit, suffer or permit any act upon said property in violation of law; to cultivate, irrigate, fertilize, fumigate, prune and do all other acts which from the character or use of said property may be reasonably necessary, the specific enumerations herein not excluding the general.

(2) To provide, maintain and deliver to Beneficiary fire insurance satisfactory to and with loss payable to Beneficiary. The amount collected under any fire or other insurance policy may be applied by Beneficiary upon any indebtedness secured hereby and in such order as Beneficiary may determine, or at option of Beneficiary the entire amount so collected or any part thereof may be released to Trustor. Such application or release shall not cure or waive any default or notice of default hereunder or invalidate any act done pursuant to such notice.

(3) To appear in and defend any action or proceeding purporting to affect the security hereof or the rights or powers of Beneficiary or Trustee; and to pay all costs and expenses, including cost of evidence of title and attorney's fees in a reasonable sum, in any such action or proceeding in which Beneficiary or Trustee may appear, and in any suit brought by Beneficiary to foreclose this Deed.

(4) To pay: at least ten days before delinquency all taxes and assessments affecting said property, including assessments on appurtenant water stock; when due, all encumbrances, charges and liens, with interest, on said property or any part thereof, which appear to be prior or superior hereto; all costs, fees and expenses of this Trust.

Should Trustor fail to make any payment or to do any act as herein provided, then Beneficiary or Trustee, but without obligation so to do and without notice to or demand upon Trustor and without releasing Trustor from any obligation hereof; may: make or do the same in such manner and to such extent as either may deem necessary to protect the security hereof, Beneficiary or Trustee being authorized to enter upon said property for such purposes; appear in and defend any action or proceeding purporting to affect the security hereof or the rights or powers of Beneficiary or Trustee, pay, purchase, contest or compromise any encumbrance, charge or lien which in the judgment of either appears to be prior or superior hereto; and, in exercising any such powers, pay necessary expenses, employ counsel and pay reasonable attorney's fees.

(5) To pay immediately and without demand all sums so expended by Beneficiary or Trustee, with interest from date of expenditure at the amount allowed by law in effect at the date hereof, and to pay for any statement provided for by law in effect at the date hereof regarding the obligation secured hereby any amount demanded by the Beneficiary not to exceed the maximum allowed by law at the time when said statement is demanded.

(6) That any award of damage in connection with any condemnation for public use of or injury to said property or any part thereof is hereby assigned and shall be paid to Beneficiary who may apply or lease such monies received by him in the same manner and with the same effect as above provided for disposition of proceeds of fire or other insurance.

(7) That by accepting payment of any sum secured hereby after its due date, Beneficiary does not waive the right either to require prompt payment when due of all other sums so secured or to declare default for failure so to pay.

(8) That at any time or from time to time, without liability therefor and without notice, upon written request of Beneficiary and presentation of this Deed and said note for endorsement, and without affecting the personal liability of any person for payment of the indebtedness secured hereby, Trustee may: reconvey any part of said property; consent to the making of any map or plat thereof; join in granting any easement thereon; or join in any extension agreement or any agreement subordinating the lien or charge hereof.

(9) That upon written request of Beneficiary stating that all sums secured hereby have been paid, and upon surrender of this Deed and said note to Trustee for cancellation and retention and upon payment of its fees, Trustee shall reconvey, without warranty, the property then held hereunder. The recitals in such reconveyance of any matters or facts shall be conclusive proof of the truthfulness thereof. The grantee in such reconveyance may be described as "the person or persons legally entitled thereto." Five years after issuance of such full reconveyance, Trustee may destroy said note and this Deed (unless directed in such request to retain them).

(10) That as additional security, Trustor hereby gives to and confers upon Beneficiary the right, power and authority, during the continuance of these Trusts, to collect the rents, issues and profits of said property, reserving unto Trustor the right, prior to any default by Trustor in payment of any indebtedness secured hereby or in performance of any agreement hereunder, to collect and retain such rents, issues and profits as they become due and payable. Upon any such default, Beneficiary may at any time without notice, either in person, by agent, or by a receiver to be appointed by a court, and without regard to the adequacy of any security for the indebtedness hereby secured, enter upon and take possession of said property or any part thereof, in Beneficiary's own name sue for or otherwise collect such rents, issues and profits, including those past due and unpaid, and apply the same, less costs and expenses of operation and collection, including reasonable attorney's fees, upon any indebtedness secured hereby, and in such order as Beneficiary may determine. The entering upon and taking possession of said property, the collection of such rents, issues and profits and the application thereof as aforesaid, shall not cure or waive any default or notice of default hereunder or invalidate any act done pursuant to such notice.

(11) That upon default by Trustor in payment of any indebtedness secured hereby or in performance of any agreement hereunder, Beneficiary may declare all sums secured hereby immediately due and payable by delivery to Trustees of written declaration of default and demand for sale and of written notice of default and of election to cause to be sold said property, which notice Trustee shall cause to be filed for record. Beneficiary also shall deposit with Trustee this Deed, said note and all documents evidencing expenditures secured hereby.

After the lapse of such time as may then be required by law following the recordation of said notice of default, and notice of sale having been given as then required by law, Trustee, without demand on Trustor, shall sell said property at the time and place fixed by it in said notice of sale, either as a whole or in separate parcels, and in such order as it may determine, at public auction to the highest bidder for cash in lawful money of the United State, payable at time of sale. Trustee may postpone sale of all or any portion of said property by public announcement at such time and place of sale, and from time to time thereafter may postpone such sale by public announcement at the time fixed by the preceding postponement. Trustee shall delivery to such purchaser its deed conveying the property so sold, but without any covenant or warranty, express or implied. The recitals in such deed of any matters or facts shall be conclusive proof of the truthfulness thereof. Any person, including Trustor, Trustee, or Beneficiary as hereinafter defined, may purchase at such sale.

After deducting all costs, fees and expenses of Trustee and of this Trust, including cost of evidence of title in connection with sale, Trustee shall apply the proceeds of sale to payment of: All sums expended under the terms hereof, not then repaid, with accrued interest at the amount allowed by law in effect at the date hereof; all other sums then secured hereby; and the remainder, if any, to the person or persons legally entitled thereto.

(12) Beneficiary, or any successor in ownership of any indebtedness secured hereby, may from time to time, by instruments in writing, substitute a successor or successors to any Trustee named herein or acting hereunder which instrument, executed by the Beneficiary and duly acknowledged and recorded in the office of the recorder of the county or counties where said property is situated, shall be conclusive proof of proper substitution of such successor Trustee or Trustees, who shall, without conveyance from the Trustee predecessor, succeed to all its title, estate, rights, powers and duties. Said instrument must contain the name of the original Trustor, Trustee and Beneficiary hereunder, the book and page where this Deed is recorded and the name and address of the new Trustee.

(13) That this Deed applies to, inures to the benefit of, and binds all parties hereto, their heirs, legatees, devisees, administrators, executors, successors and assigns. The term Beneficiary shall mean the owner and holder, including pledges, of the note secured hereby, whether or not named as Beneficiary herein. In this Deed, whenever the context so requires, the singular number includes the plural.

(14) That Trustees accept this Trust when this Deed, duly executed and acknowledged, is made a public record, as provided by law. Trustee is not obligated to notify any party hereto of pending sale under any other Deed of trust or of any action or proceeding in which Trustor, Beneficiary or Trustee shall be a party unless brought by Trustee.

STATE OF CALIFORNIA • DEPARTMENT OF TRANSPORTATION

EXHIBIT
16-EX-17

ESCROW INSTRUCTIONS

(Form #)

Dist. _____ Co. _____ Rte. _____
DD# _____
Escrow # _____

Enclosed is fully executed Director's Deed _____(Number)_____ which you are authorized to record when you hold the following:

(1) The sum of $_____ which shall be payable on demand to the Department of Transportation.*

(2) A fully executed Deed of Trust naming the State of California, acting by and through the Department of Transportation, as Beneficiary, _____, Trustor, and _____, Trustee.

(3) A fully executed Promissory Note payable to the State of California, acting by and through the Department of Transportation in the amount of $_____ bearing interest on unpaid principal at the rate of _____% per annum payable in forty (40) equal quarterly installments, including principal and interest, commencing the _____ day of , 19__. Said note shall provide for a penalty of 5% of any payment which is paid more than ten days after its due date.

(4) Fire insurance policy in the amount of $_____ naming the State of California, acting by and through the Department of Transportation, as coinsured.

No policy of title insurance or fees in connection therewith will be furnished or paid by the State.

Recording fees, documentary stamp taxes or other real estate transaction taxes or fees by whatever name known, including escrow fees or broker's commissions are to be paid by the grantee.

This escrow is to close, documents recorded, and funds paid to the Department of Transportation on or before _____.

---

* This amount should equal 30% of the parcel's purchase price less the amount deposited at the time of sale.

SAMPLE NEWSPAPER NOTIFICATION FOR LOW- AND MODERATE-INCOME HOUSEHOLDS

(Form #)

ATTENTION LOW- AND MODERATE-INCOME HOUSEHOLDS

The Department of Transportation is seeking prospective purchasers to participate in its Affordable Housing Resale Program.

State law has resulted in a number of single-family residences being sold by the Department of Transportation for prices which were affordable to the present occupants.

The ___ bedroom, ___ bath residence at _____ is now available for resale at an affordable price in the range of $_____ to $_____ to a household having a gross monthly income in the range of $ to $_____.

If you are interested in acquiring the above property at an affordable price, please contact the following individual before 4 p.m. on (date):

MINIMUM CONTENTS OF EXCESS LAND PARCEL FILE

1. The clearance circulation memorandum.
2. Economic justification and hold authorization forms, where appropriate.
3. A working copy of Form RW 16-1.
4. A copy of the State's condemnation guarantee evidencing condition of title. (State's policy of title insurance.)
5. Copies of correspondence to the Department of General Services and other State, Federal, and local agencies and replies thereto.
6. A copy of the appraisal report and/or disposal value estimate.
7. Written waivers from uninterested adjoining property owners if proposed sale is to be Finding "A" or "B".
8. A current map of the excess parcel in sufficient detail to show any adjacent State-owned properties and if sale is to be other than public, the adjoining ownerships, and a clear delineation of the State's access restrictions.
9. Documents and maps relating to significant design changes.
10. Copy of any time payment contract.
11. Fully completed parcel diary. (May be kept separately in Excess Land Section until file is closed.)
12. Copy of deed, deed of trust, note and/or other instrument of conveyance. (If sold, each document must be fully conformed to the original.)
13. Copies of any documents evidencing incorporation of the parcel within the right of way.
14. One copy each of the sales notices, bid tally sheet and executed option agreement if parcel disposed of by public sale.
15. Any authorizing memoranda or correspondence between the Districts, departments and/or Division of Right of Way. Also, include any authorizing memoranda from the District Division Chief, Right of Way, or District Director.
16. Any correspondence or inquiries concerning the parcels which are necessary to the full understanding of the disposal transaction.
17. TRAMS multipurpose posting tag, or other suitable sign-off record, to assure proper accounting of Federal charges and credits.

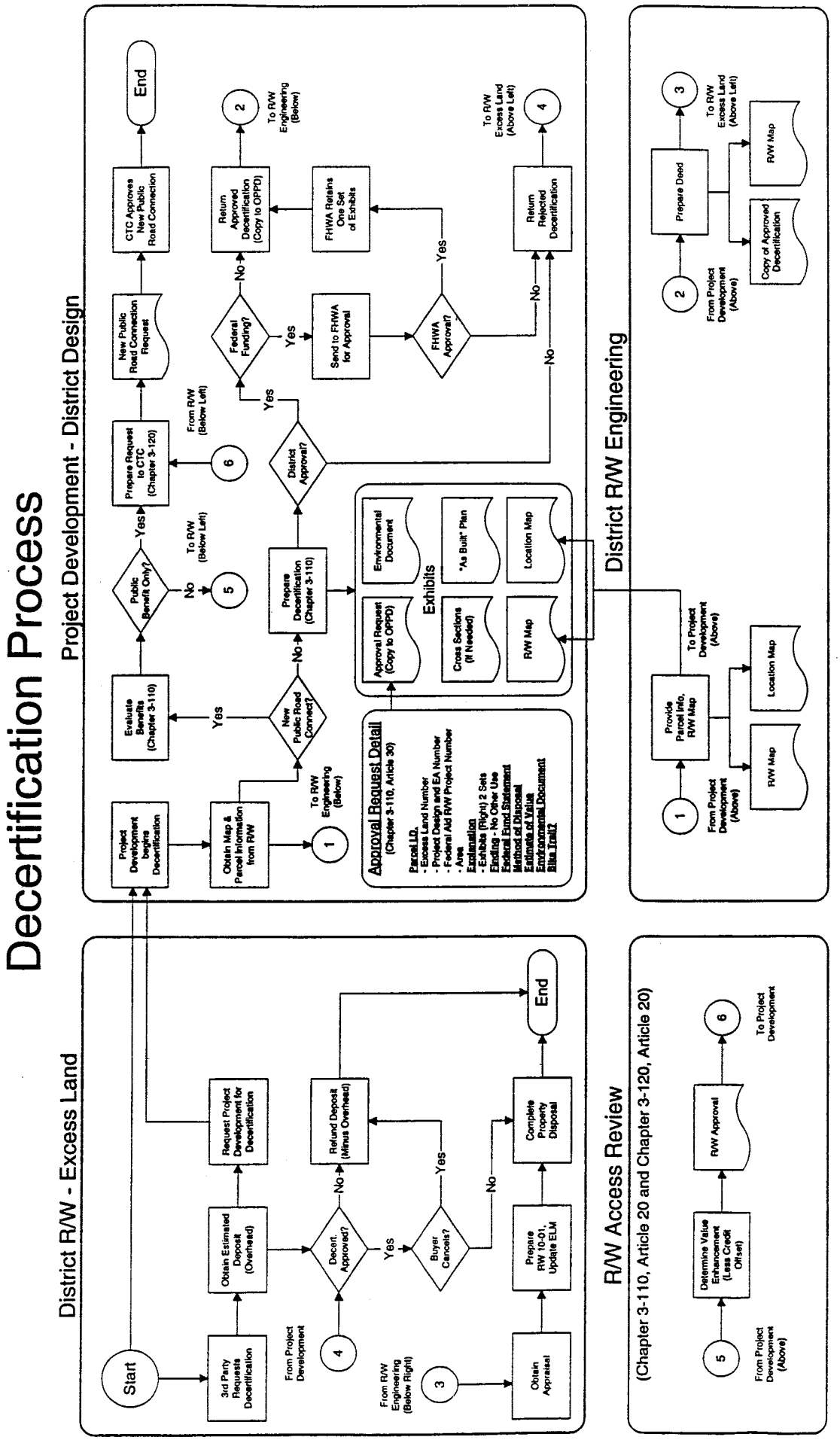
Decertification Process
Project Development - District Design
District R/W - Excess Land
District R/W Engineering
R/W Access Review
(Chapter 3-110, Article 20 and Chapter 3-120, Article 20)
Start
3rd Party Requests Decertification
Obtain Estimated Deposit (Overhead)
Request Project Development for Decertification
From Project Development
Decert. Approved?
Yes
No
Refund Deposit (Minus Overhead)
From R/W Engineering (Below Right)
Buyer Cancels?
Yes
No
Obtain Appraisal
Prepare RW 10-01, Update ELM
Complete Property Disposal
End
Project Development begins Decertification
Obtain Map & Parcel Information from R/W
To R/W Engineering (Below)
New Public Road Connect?
Yes
No
Evaluate Benefits (Chapter 3-110)
Public Benefit Only?
Yes
No
To R/W (Below Left)
Prepare Decertification (Chapter 3-110)
Approval Request (Copy to OPPD)
Environmental Document
Exhibits
Cross Sections (If Needed)
"As Built" Plan
R/W Map
Location Map
Approval Request Detail
(Chapter 3-110, Article 30)
Parcel I.D.
- Excess Land Number
- Project Design and EA Number
- Federal Aid R/W Project Number
- Area
Explanation
- Exhibits (Right) 2 Sets
Finding - No Other Use
Federal Fund Statement
Method of Disposal
Estimate of Value
Environmental Document
Bike Trail?
District Approval?
Yes
No
From R/W (Below Left)
Prepare Request to CTC (Chapter 3-120)
New Public Road Connection Request
CTC Approves New Public Road Connection
End
Federal Funding?
Yes
No
Send to FHWA for Approval
FHWA Approval?
Yes
No
FHWA Retains One Set of Exhibits
Return Approved Decertification (Copy to OPPD)
To R/W Engineering (Below)
Return Rejected Decertification
To R/W Excess Land (Above Left)
From Project Development (Above)
Provide Parcel Info, R/W Map
R/W Map
Location Map
To Project Development (Above)
From Project Development (Above)
Prepare Deed
Copy of Approved Decertification
R/W Map
To R/W Excess Land (Above Left)
From Project Development (Above)
Determine Value Enhancement (Less Credit Offset)
R/W Approval
To Project Development