CHAPTER 3

PLANE FRAME

CONTENTS

Section		Page
3.1	Introduction	3-2
3.2	Local Coordinate System For Planar Structures	3-3
3.3	Orientation of Local Coordinate System (Beta Angle)	3-3
3.4	Member Loads and Sign Conventions	3-5
3.5	Rigid Diagonal Frame Problem	3-9
3.6	Problem Modification Flexible Diagonals and Elastic Supports	3-22
3.7	Variable Member Properties Problem - Tapered Column	3-27
3.8	Plane Frame With Nonsymmetrical Member Cross Sections	3-51
3.9	Influence Lines by The Müller-Breslau Principle	3-71
3.10	Example Plane Frame Problem	3-87
3.11	Example Plane Frame Problem	3-90

3.1 INTRODUCTION

The material presented in Chapters 1 and 2 of this manual are a necessary prerequisite for a reasonable understanding of the material presented in this chapter.

STRUDL treats a plane frame structure as a system of members lying in a plane rigidly connected at their ends. The individual members must have an axis of symmetry in the plane of the structure. The forces acting on the frame and the displacements of the frame must be in the plane of the structure. Couples acting on the frame have their moment vectors normal to the plane of the frame.

The STRUDL algorithms consider both bending and axial deformations in the analysis of frame members. STRUDL also provides the user with the option to have shear deformations considered in the analysis. This will apply to members with appreciable depth relative to their lengths. A brief review of shearing deformations is presented in Chapter I.

Deviation from full fixity at the support joints may be obtained by specification of appropriate JOINT RELEASES in the global system. Deviation from full fixity at the free joints is obtained by releasing forces at the ends of the members, using the MEMBER RELEASES command in the local coordinate system.

STRUDL considers only members of constant cross section or members made up of segments each of which has a constant cross section. Curved members may be analyzed as a series of straight members or they may be analyzed by inputting the stiffness or flexibility matrix of the curved member directly. An arch with a variable moment of inertia may be modeled and analyzed as a series of members made up of constant cross section segments.

The example problems presented in this chapter illustrate how the STRUDL program may be used to assist the designer in the analysis of the plane frame structures. The problems presented here are not typical bridge structures, but the principles involved and the STRUDL commands utilized are typical of those encountered in analyzing bridge structures.

Problem 3.5 introduces some of the basic commands used in the analysis of a plane frame structure.

Problem 3.6 illustrates how the structure described in the first problem is changed and re-analyzed in a single submittal. The structure is revised by making the diagonal members flexible and introducing elastic restraints at the supports.

The tapered column member in Problem 3.7 is modeled and described as a variable member made up of three segments. For the first analysis the structure is modeled as a series of slender members connected at the joints; i.e., the clear span distance is taken as the distance between joints. A second analysis is performed on the structure in which the support widths are specified and the actual clear span is used in the analysis.

To illustrate the present plotting capabilities a printer plot of the structure, shear and moment diagrams and an envelope are included in the output.

Problem 3.8 illustrates some of the temperature loading capabilities available in STRUDL.

Problem 3.9 illustrates the use of STRUDL to obtain influence coefficients by the Müller-Breslau principle.

3.2 Local Coordinate System for Planar Structures

A local coordinate system is used to specify the information associated with each member. The centroidal axis taken along the length of the member is defined as the local X axis. The local Y and local Z axes coincide with the principal axes of the member as shown in Figure 3.2. The user should orient the positive direction of these two axes to facilitate loading and interpretation of results.

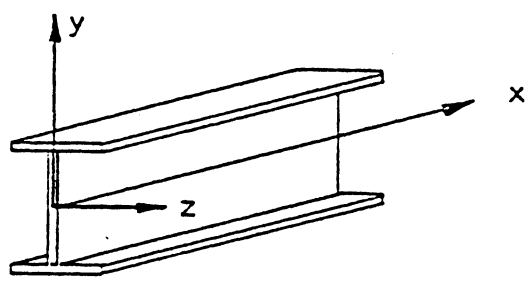

LOCAL X, Y AND Z AXES

Fig. 3.2

3.3 Orientation of Local Coordinate System (Beta Angle)

For a plane frame structure, Beta must be either zero or a multiple of 90 degrees, and it is generally desirable that Beta be zero to avoid complications in problem

coding. If Beta is not zero or a multiple of 90 degrees, a space frame analysis must be used.

To illustrate the specifications of the individual member orientations for planar structures, consider the two members shown in Figure 3.3a.

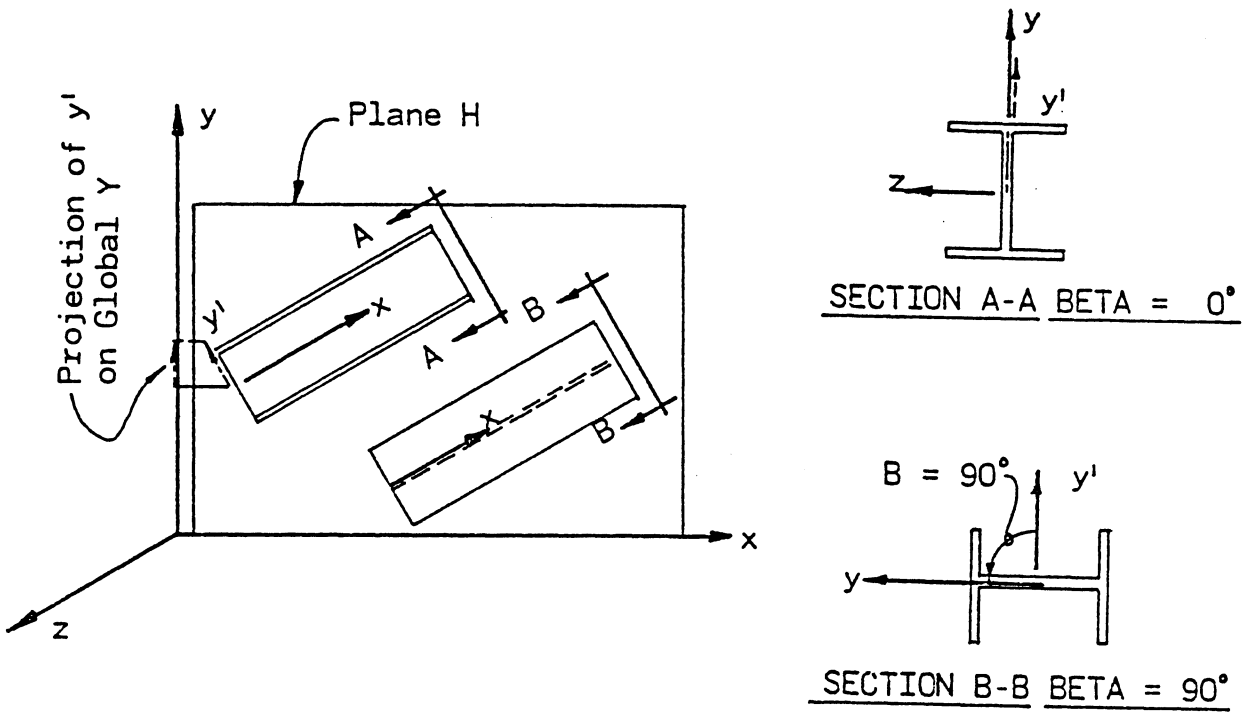

Fig. 3.3a

To locate the principal axes as indicated by the Y and Z axes in Sections A-A and B-B, we must first determine the reference position Y' (1.e., the BETA = 0 position) for the cross sections. Following the procedure outlined in Chapter I we construct a plane which contains the local X-axis and is parallel to the global Y-axis. This will be the X-Y plane for the members shown in the Figure 3.3a. Next pass a plane through the members perpendicular to the local X axis exposing the member cross sections as shown. The line defined by the intersection of these two planes is the Y'-axis and its positive direction is chosen such that its projection on the Y global axis is in the positive Y-global direction. Having established the location of the Y'-axis, the principal Y axis is located by specifying the BETA angles for the member. The positive direction of the BETA angle is established by applying the right hand rule about the local X-axis. For the member shown in Section A-A the Y' axis and the Y axis are coincident. Thus, BETA is zero and need not be specified. For the member shown in Section B-B, the principal Y axis is oriented 90° to the Y' axis. The BETA angle is, therefore, 90° in the positive direction as shown by the local X axis coming out of the paper.

To further illustrate the orientation of the local coordinate system, consider the members shown in Figure 3.3b with their local X axes parallel to the global Y axis.

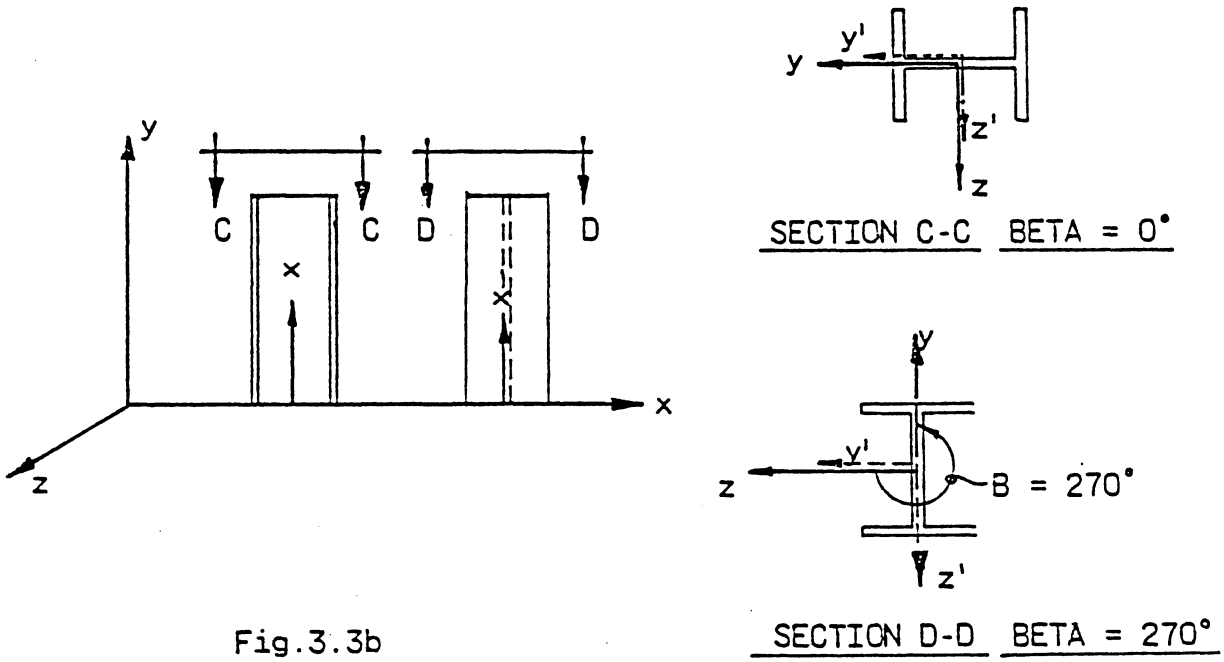

Fig.3.3b

Reference position Y' axis is located by orienting the local Z' axis parallel to the global Z axis and then using the right hand rule to locate the Y' axis as shown for the two cases considered in Sections C-C and D-D. The BETA angle is measured from the Y' axis to the Y axis of the member using the right hand rule. For the first case shown in Section C-C the Y axis is in the same direction as the Y' axis, thus, BETA = 0°. For the second case shown in Section D-D, BETA = 270° measured in the positive direction with the local X coming out of the paper.

3.4 Member Loads and Sign Conventions

The STRUDL commands for the individual member loads were designed to provide the user with a versatile and flexible means to describe all the possible loading conditions that could be imposed on the individual members of a structure. The various types of loading conditions may be classified into the form following general categories:

A. Physical Loads

B. Thermal Loads

C. Distortion

D. Boundary Conditions

These categories and their associated signs conventions for plane frame members are described below.

A. Physical Loads

Physical member loads (i.e., moments and forces) may be concentrated, uniform or linearly varying as shown in Figure 3.4a.

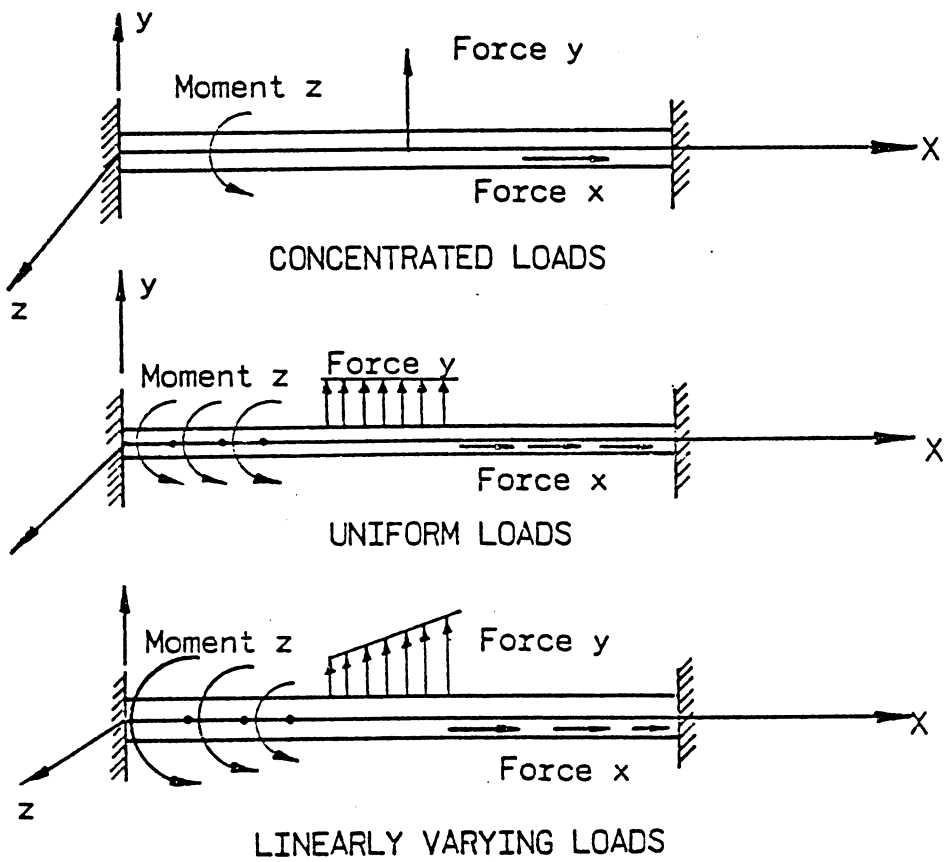

Fig. 3.4a

The loads shown above are all acting in the positive direction, relative to their member axes. The uniform loads and linearly varying loads may act over the entire length of the member. The loads shown above are all acting in the positive directions of the local coordinate systems. The user may also specify the direction of the load in the direction of one of the global axes as shown in Figure 3.4b.

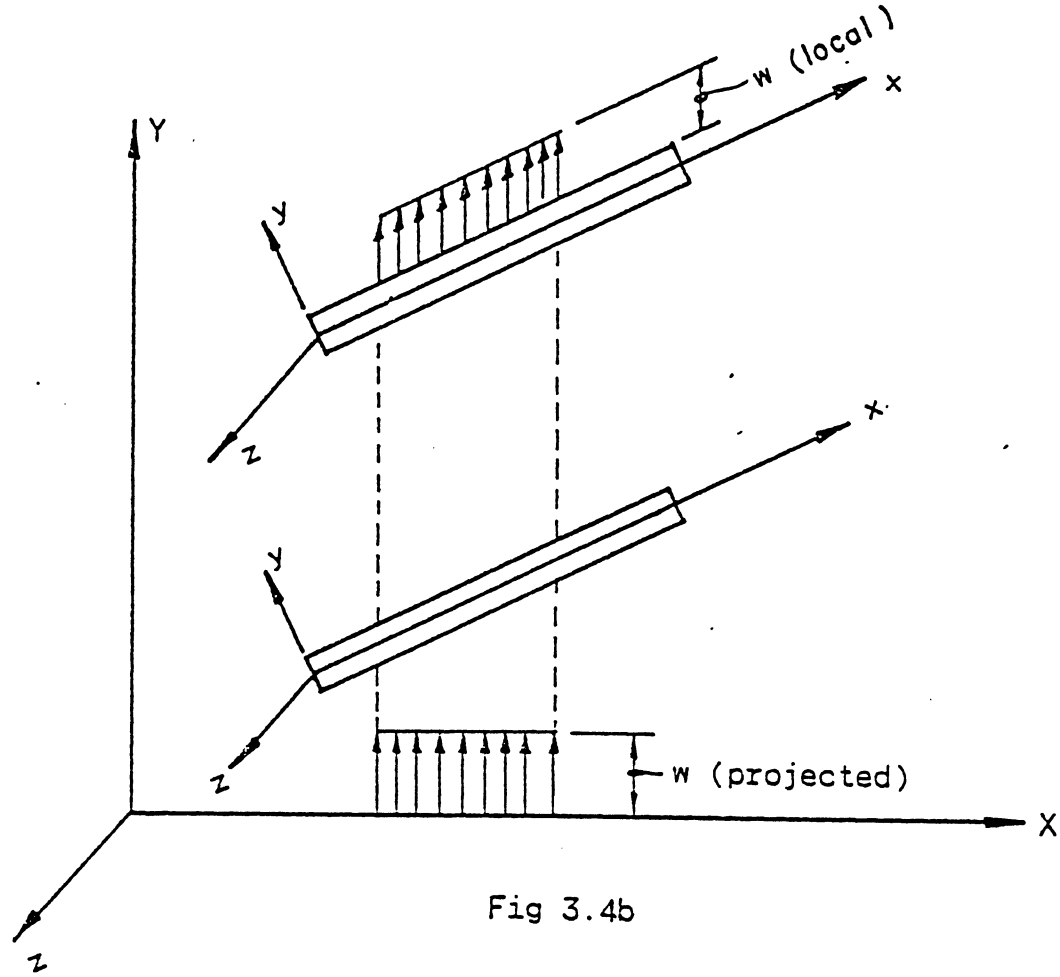

Fig 3.4b

POSITIVE MEMBER LOADS IN THE GLOBAL COORDINATE SYSTEM

The intensities of member loads may be specified in one of two ways as shown above. The loading intensity dimensioned W (local) is specified as a function of the actual member length. This type of loading specification is useful in describing the gravity loading and earthquake effects. The second loading intensity dimensioned W (projected) is described as a function of the projected length on the global plane orthogonal to the direction of the load. This type of loading specified is extremely useful in describing wind loads and earth pressure. This loading requires an additional command modifier. Problem 3.7 illustrates the use of this capability.

B. Thermal Loads

Thermal loadings are specified in the local coordinate system. Positive temperature change causing positive distortion, relative to the indicated axes, with the start of the member fixed as shown in Figure 3.4c below for loading and axial temperature loadings.

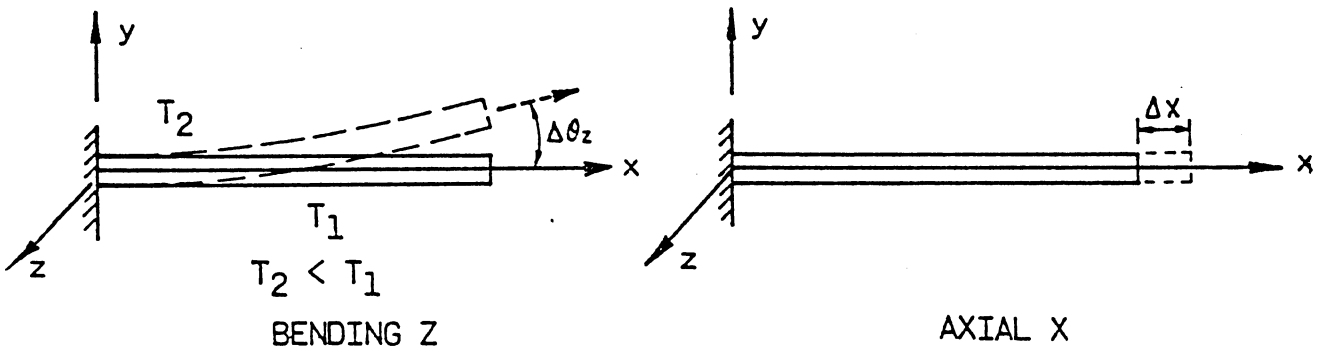

Fig. 3.4C

POSITIVE THERMAL LOADS IN THE LOCAL COORDINATE SYSTEM

C. Member Distortions

Member distortions (i.e., displacements and rotations) may be consolidated or uniform as shown in Figure 3.4d.

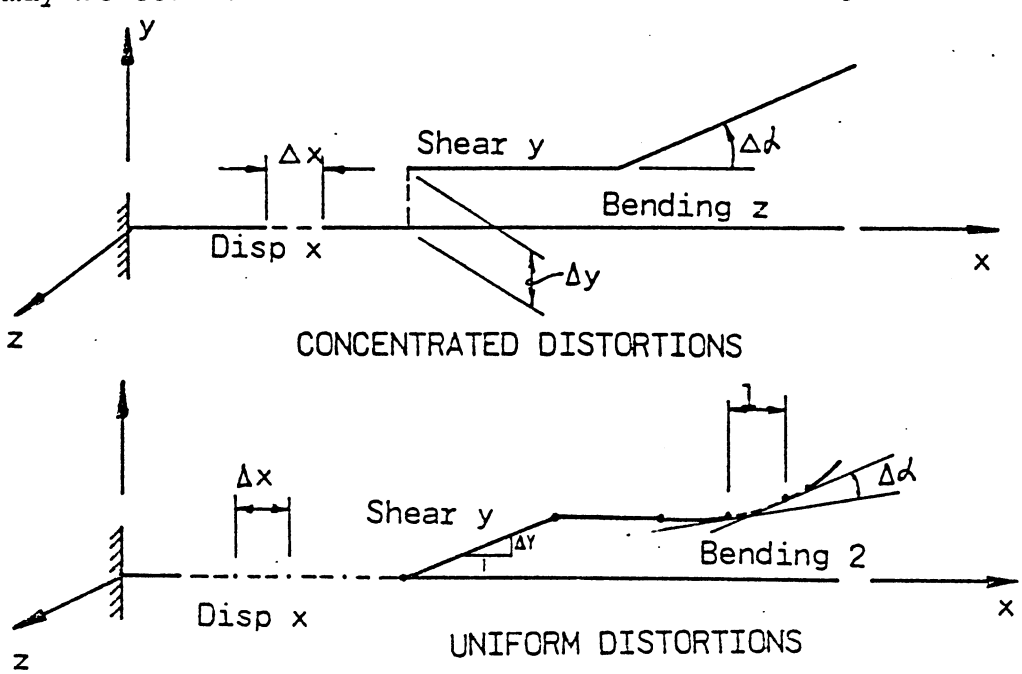

Fig. 3.4d

MEMBER DISTORTIONS IN THE LOCAL COORDINATE SYSTEM

The distortion shown above are all positive. The uniform distortions may be applied to a portion of the member as shown in the figure above or they may be applied to the entire member. Positive distortion causes positive displacements in the local coordinate system with the start of the member held fixed as shown in the sketch above. Concentrated member distortions are useful in determining influence line coefficients using the Müller-Breslau principle. Problem 3.9 illustrates the use of this principle.

D. Boundary Conditions

The user may also describe his boundary condition loads (i.e., forces and moments) at the ends of the member. These member and loads are described in the local coordinate system. The positive directions for the member end loads, relative to the indicated axes, at the start and end of a plane frame member is shown in Figure 3.4e.

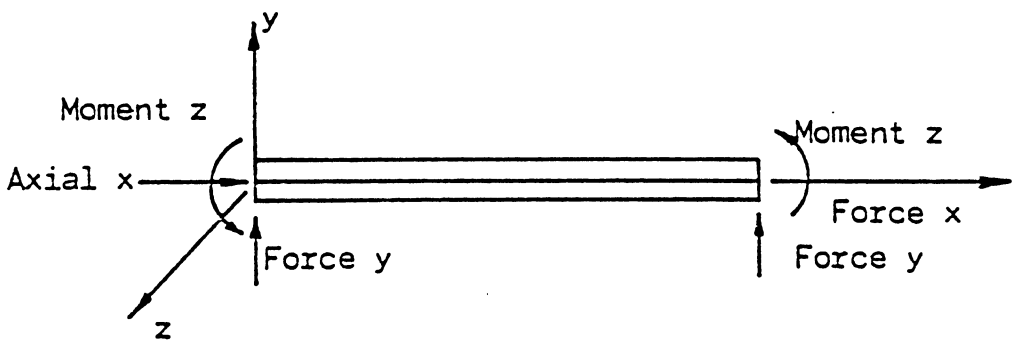

Fig. 3.4e

MEMBER END LOADS IN THE LOCAL COORDINATE SYSTEM

This type of loading condition is used to input fixed end forces and moments.

3.5 Rigid Diagonal Frame Problem

Consider the plane frame structure shown in Figure 3.5a subjected to the loading conditions given in Figures 3.5b and 3.5c. The truss discussed in Chapter 2 is now analyzed as a plane frame structure.

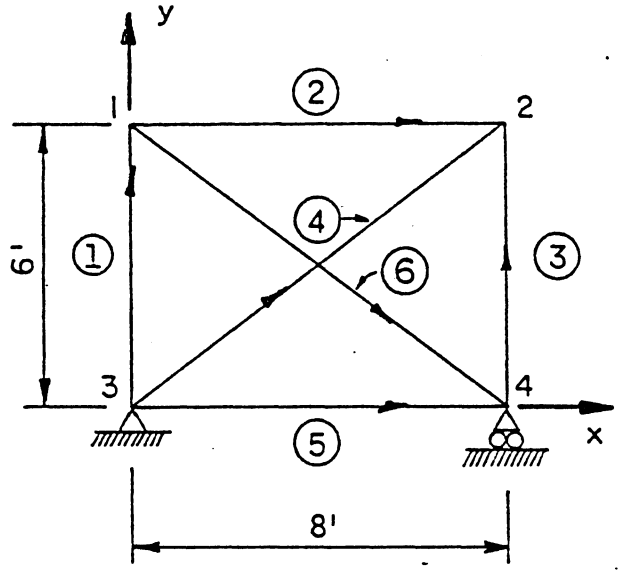

Member	Ax	Iz
1	2.0	100.
2	1.0	40.
3	2.0	100.
4	1.5	80.
5	1.0	40.
6	1.5	80.

Fig. 3.5a

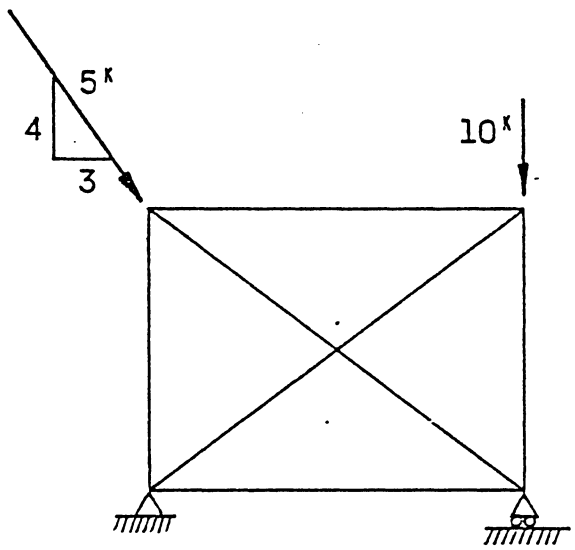

LOADING 1

Fig. 3.5b

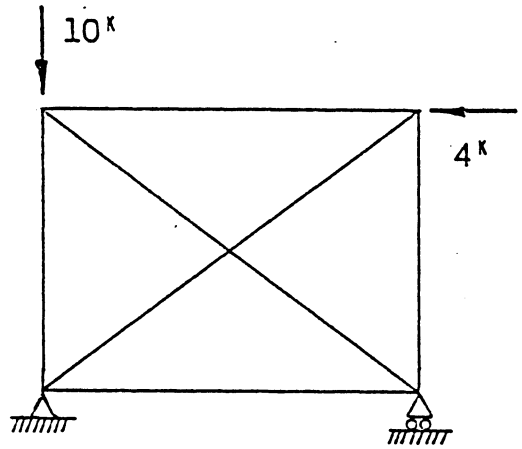

LOADING 2

Fig. 3.5c

The following commands describe the structure and the loading conditions given. The TYPE PLANE FRAME command given ON line 20 indicates to STRUDL that the frame, loads, deformations, and rotations are in one plane. If the frame is to be in either the XZ or YZ plane then the TYPE command must state this fact; as an example, TYPE PLANE FRAME YZ.

STATE OF CALIFORNIA - BUSINESS AND TRANSPORTATION AGENCY - DEPARTMENT OF PUBLIC WORKS - DIVISION OF ADMINISTRATIVE SERVICES

COMPUTER SYSTEMS

ICES

SUBSYSTEM NAME	SOURCE DIST. UNIT	CHARGE DIST. UNIT	EXPENDITURE AUTHORIZATION	SPECIAL DESIGNATION WHEN APPLICABLE	SEQUENCE
STRUDL 'PROB 3.5' 'RIGID DIAGONALS'					10
TYPE PLANE FRAME					20
UNITS KIP FEET					30

The 'UNIT' command informs STRUDL that different units than the standard units are to be used in the problems following the 'UNIT' command. Line 30 is an example of its use. The 'UNIT' statement, if required, must be given prior to the commands that it affects, i.e., if the joint coordinates are to be described in feet, the 'UNITS FEET' statement must appear before the 'JOINT COORDINATES' command.

JOINT COORDINATES	40
1 X 0. Y 6.	50
2 X 8. Y 6.	60
3 X 0. Y 0. SUPPORT	70
4 X 8. Y 0. SUPPORT	80
JOINT RELEASE MOMENT Z	90
3	100
4 FORCE X	101

Moment Z specified in the header command "JOINT RELEASE", on Line 90 will be released for all joints in the list after the command. This means moment Z will be released for joints 3 and 4. Force X will be released for joint 4 only.

MEMBER INCIDENCES	120
1 3 1 $ MEMBER 1 GOES FROM 3 TO 1	130
2 1 2	140
3 4 2	150
4 3 2	160
5 3 4	170
6 1 4	180

STRUDL allows the user to insert comments in the input data. The comments may be placed on the same line as the command or the whole line may be used for comments by placing a $ in Column 1. Comments placed on command lines must follow the command, and a $ followed by a blank space must precede the comment.

```
UNITS INCHES                                                    181
MEMBER PROPERTIES PRISMATIC                                     182
     1 3 AX 2. IZ 100.                                          190
     2 5 AX 1. IZ 40.                                           200
     4 6 AX 1.5 IZ 80.                                          210
CONSTANT E 30000. ALL                                           230
LOADING 1 'INCLINED LOAD'                                       250
     JOINT 1 LOAD FORCE X 3. FORCE Y -4.                        260
     JOINT 2 LOAD FORCE Y -10.                                  270
LOADING 2 'HORIZONTAL LOAD'                                     280
     JOINT 1 LOAD FORCE Y -10.                                  290
     JOINT 2 LOAD FORCE X -4.                                   300
```

When using a negative or positive sign to indicate the sign of a value, no blanks must appear between the sign and number.

```
LOADING COMBINATION 3 COMBINE 1 .75 2 1.                        305
PRINT DATA                                                      310
STIFFNESS ANALYSIS                                              320
LIST FORCES DISPLACEMENTS REACTIONS                             360
```

All loading conditions, members and joints specified prior to the STIFFNESS ANALYSIS command on line 320 will be considered active during the analysis. The user has the ability to omit portions of a structure or loading conditions which have been specified by using the INACTIVE command prior to the analysis. The LOAD LIST command (required in STRUDL I), is now used (i.e., in STRUDL II) as an alternative form for specifying which loading conditions are to be considered active in the analysis.

Following is the computer output which includes a print-out of the input commands, a print of the STRUDL interpretation of the input commands and the results requested.

```
STRUCL 'PROB 3.5' 'RIGID CIAGCNALS'                                  $ 14A 40    0010

          ***********************************************
          *                                             *
          *     ICES STRUDL II      VERSION 1 MOD 1     *
          *       THE STRUCTURAL DESIGN LANGUAGE        *
          *    MASSACHUSETTS INSTITUTE OF TECHNOLOGY    *
          *             STATE OF CALIFORNIA             *
          *     BRICGE DEPARTMENT DIVISICN CF HWYS.     *
          *    SPECIAL STUDIES SECTION  PH. 445-6519    *
          *     NOVEMBER 1969  INSTALLEC APRIL 1970     *
          *           18:12:00       6/01/7C            *
          *                                             *
          ***********************************************

TYPE PLANE FRAME                                                      $ 14A 40    0020

UNITS KIP FEET                                                        $ 14A 40    0030

JOINT COORDINATES                                                     $ 14A 40    0040

     1 X 0. Y 6.                                                      $ 14A 40    0050

     2 X 8. Y 6.                                                      $ 14A 40    0060

     3 X 0. Y 0. SUPPORT                                              $ 14A 40    0070

     4 X 8. Y 0. SUPPORT                                              $ 14A 40    0080

JOINT RELEASE MOMENT Z                                                $ 14A 40    0090

     3                                                                $ 14A 40    0100

     4 FCRCE X                                                        $ 14A 40    0101

MEMBER INCIDENCES                                                     $ 14A 40    0120

     1 3 1 $ MEMBER 1 GOES FROM 3 TO 1                                $ 14A 40    0130

     2 1 2                                                            $ 14A 40    0140

     3 4 2                                                            $ 14A 40    0150

     4 3 2                                                            $ 14A 40    0160

     5 3 4                                                            $ 14A 40    0170

     6 1 4                                                            $ 14A 40    0180

UNITS INCHES                                                          $ 14A 40    0181

MEMBER PROPERTIES PRISMATIC                                           $ 14A 40    0182

     1 3 AX 2. IZ 100.                                                $ 14A 40    0190

     2 5 AX 1. IZ 40.                                                 $ 14A 40    0200

     4 6 AX 1.5 IZ 80.                                                $ 14A 40    0210

CONSTANT E 30000. ALL                                                 $ 14A 40    0230
```

```
LOADING 1 'INCLINED LOAD'                                    $ 14A 40    0250

     JOINT 1 LOAD FORCE X 3. FORCE Y -4.                     $ 14A 40    0260

     JOINT 2 LOAD FORCE Y -10.                               $ 14A 40    0270

LOADING 2 'HORIZONTAL LOAD'                                  $ 14A 40    0280

     JOINT 1 LOAD FORCE Y -10.                               $ 14A 40    0290

     JOINT 2 LOAD FORCE X -4.                                $ 14A 40    0300

LOADING COMBINATION 3 COMBINE 1 .75 2 1.                     $ 14A 40    0305

PRINT DATA                                                   $ 14A 40    0310
```

```
****************************************
*  PROBLEM DATA FROM INTERNAL STORAGE  *
****************************************

JOB ID -  PROB 3.5     JOB TITLE - RIGID DIAGONALS

ACTIVE UNITS -  LENGTH        WEIGHT        ANGLE        TEMPERATURE      TIME
                  INCH          KIP           RAD            DEGF           SEC

         ********** STRUCTURAL DATA **********


ACTIVE STRUCTURE TYPE - PLANE   FRAME .

ACTIVE COORDINATE AXES  X Y

JOINT COORDINATES-----------------------------------------/  STATUS---/
JOINT            X            Y            Z     CONDITION

1              0.0         72.000        0.0                 ACTIVE
2             96.000       72.000        0.0                 ACTIVE
3              0.0          0.0          0.0     SUPPORT     ACTIVE
4             96.000        0.0          0.0     SUPPORT     ACTIVE


JOINT RELEASES-------------------------------------/ELASTIC SUPPORT RELEASES-------------------------------------------/
JOINT   FORCE  MOMENT   THETA 1  THETA 2  THETA 3      KFX          KFY          KFZ          KMX          KMY          KMZ
3                 Z      0.0      0.0      0.0         0.0          0.0          0.0          0.0          0.0          0.0
4       X         Z      0.0      0.0      0.0         0.0          0.0          0.0          0.0          0.0          0.0


MEMBER INCIDENCES----------/ LENGTH------/   RELEASES---------------------/ STATUS--/
MEMBER   START     END       LOCAL COORD.        START            END
                                             FORCE  MOMENT   FORCE  MOMENT

1        3         1            72.000                                      ACTIVE
2        1         2            96.000                                      ACTIVE
3        4         2            72.000                                      ACTIVE
4        3         2           120.000                                      ACTIVE
5        3         4            96.000                                      ACTIVE
6        1         4           120.000                                      ACTIVE


MEMBER PROPERTIES-----------------------------------------------------------------------------------------------------/
MEMBER/SEG TYPE        SEG.L   COMP  AX/YD     AY/ZD     AZ/YC     IX/ZC     IY/EY     IZ/EZ      SY        SZ

1        PRISMATIC                   2.000     0.0       0.0       0.0       0.0     100.000     0.0       0.0
                                     0.0       0.0       0.0       0.0       0.0       0.0
2        PRISMATIC                   1.000     0.0       0.0       0.0       0.0      40.000     0.0       0.0
                                     0.0       0.0       0.0       0.0       0.0       0.0
3        PRISMATIC                   2.000     0.0       0.0       0.0       0.0     100.000     0.0       0.0
                                     0.0       0.0       0.0       0.0       0.0       0.0
4        PRISMATIC                   1.500     0.0       0.0       0.0       0.0      80.000     0.0       0.0
                                     0.0       0.0       0.0       0.0       0.0       0.0
5        PRISMATIC                   1.000     0.0       0.0       0.0       0.0      40.000     0.0       0.0
                                     0.0       0.0       0.0       0.0       0.0       0.0
6        PRISMATIC                   1.500     0.0       0.0       0.0       0.0      80.000     0.0       0.0
                                     0.0       0.0       0.0       0.0       0.0       0.0

MEMBER CONSTANTS-----------------------------------------------------------------------------------------------------/
CONSTANT   STANDARD VALUE   DOMAIN.          VALUE       MEMBER LIST


   E          29999.996094    ALL

   G             0.0          ALL

DENSITY          0.001000     ALL

  CTE            1.000000     ALL

  BETA           0.0          ALL

POISSON          0.0          ALL
```

********** DESIGN DATA **********

USER DATA SET

PARAMETER DICTIONARY----------/

NAME	TREATMENT	STANDARD	L	W	A	TEMP TIME

STRUDL DATA SET

PARAMETER DICTIONARY----------/

NAME	TREATMENT	STANDARD	L	W	A	TEMP TIME
FYLC	STANDARD	36.00	-2	1		
PF	STANDARD	1.00				
FBLTUP	STANDARD	1.00				
CCCE	REQUIRED					
KY	STANDARD	1.00				
KZ	STANDARD	1.00				
CB	STANDARD	1.00				
LY	COMPUTE	QOSTULEN				
LZ	COMPUTE	QOSTULEN				
CMY	STANDARD	0.85				
CMZ	STANDARD	0.85				
UNLCF	COMPUTE	QOSTULEN				
VALUES	STANDARD	1.00				
TRACE	STANDARD	1.00				
PRICTA	STANDARD	1.00				
TBLNAM	STANDARD	STEELWF				
MXTRIALS	STANDARD	25.00				
SECNDARY	STANDARD	1.00				

USER DATA SET

CONSTRAINT DICTIONARY----------/

NAME	RETRIEVAL

STRUDL DATA SET

CONSTRAINT DICTIONARY----------/

NAME	RETRIEVAL
AX	TABULAR
AY	TABULAR
AZ	TABULAR
IX	TABULAR
IY	TABULAR
IZ	TABULAR
SY	TABULAR
SZ	TABULAR
YO	TABULAR
ZO	TABULAR
FLTK	TABULAR
WBTK	TABULAR
YO/AFL	TABULAR
RY	TABULAR
RZ	TABULAR
COPP	TABULAR
YC	TABULAR
ZC	TABULAR
WEIGHT	TABULAR

********** LOADING DATA **********

LOADING - 1 INCLINED LOAD STATUS - ACTIVE

MEMBER AND ELEMENT LOADS----------/

MEMBER/ELEMENT

JOINT LOADS----------/ ----------/

JOINT	STEP	FORCE X	Y	Z	MOMENT X	Y	Z
1		3.000	-4.000	0.0	0.0	0.0	0.0
2		0.0	-10.000	0.0	0.0	0.0	0.0

JOINT DISPLACEMENTS----------/ ----------/

JOINT	STEP	DISP. X	Y	Z	ROT. X	Y	Z

JOINT FORCE ASSUMPTIONS ----------/

JOINT	THETA 1	2	3	FORCE X	Y	Z	MOMENT X	Y	Z

NO ASSUMPTIONS GIVEN FOR THIS LOADING

MEMBER FORCE ASSUMPTIONS ----------/ ----------/

MEMBER	COMPONENT	DISTANCE	VALUE	COMPONENT	DISTANCE	VALUE

NO ASSUMPTIONS GIVEN FOR THIS LOADING

```
LOADING - 2            HORIZONTAL LOAD                                                    STATUS - ACTIVE

MEMBER AND ELEMENT LOADS-------------------------------------------------------------------------------------------/
MEMBER/ELEMENT

JOINT LOADS-----------------------------------------/ ----------------------------------/
JOINT     STEP   FORCE X          Y          Z      MOMENT X          Y          Z
1                    0.0      -10.000       0.0          0.0        0.0        0.0
2                   -4.000      0.0         0.0          0.0        0.0        0.0

JOINT DISPLACEMENTS---------------------------------/ ----------------------------------/
JOINT     STEP   DISP. X          Y          Z      ROT.   X          Y          Z

JOINT FORCE ASSUMPTIONS ---------------------------------------------------------------------------------------------/

JOINT     THETA  1        2        3     FORCE X          Y          Z      MOMENT X          Y          Z
NO ASSUMPTIONS GIVEN FOR THIS LOADING


MEMBER FORCE ASSUMPTIONS ---------------------/    ---------------------------------/

MEMBER       COMPONENT   DISTANCE     VALUE         COMPONENT   DISTANCE     VALUE
NO ASSUMPTIONS GIVEN FOR THIS LOADING


LOADING - 3                                                                                  STATUS - ACTIVE

         COMBINATION GIVEN -   1          0.750      2          1.000


****************************************
*  END OF DATA FROM  INTERNAL STORAGE  *
****************************************
```

STIFFNESS ANALYSIS	$ 14A 40	0320
LIST FORCES DISPLACEMENTS REACTIONS	$ 14A 40	0360

```
***************************
*RESULTS OF LATEST ANALYSES*
***************************
```

PROBLEM - PROB 3.5 TITLE - RIGID DIAGONALS

ACTIVE UNITS INCH KIP RAD DEGF SEC

ACTIVE STRUCTURE TYPE PLANE FRAME

ACTIVE COORDINATE AXES X Y

LOADING - 1 INCLINED LOAD

MEMBER FORCES

MEMBER	JOINT	FORCE: AXIAL	FORCE: SHEAR Y	FORCE: SHEAR Z	MOMENT: TORSIONAL	MOMENT: BENDING Y	MOMENT: BENDING Z
1	3	2.2824469	0.2740175				8.7123232
1	1	-2.2824469	-0.2740175				11.0169554
2	1	0.6537026	-0.0305542				-1.8828459
2	2	-0.6537026	0.0305542				-1.0503569
3	4	10.4334478	0.0943936				7.7612333
3	2	-10.4334478	-0.0943936				-0.9648942
4	3	-0.6891842	0.0132691				-0.4229555
4	2	0.6891842	-0.0132691				2.0152512
5	3	-2.1666727	-0.1295522				-8.2893658
5	4	2.1666727	0.1295522				-4.1476517
6	1	2.6700220	-0.1062307				-9.1341085
6	4	-2.6700220	0.1062307				-3.6135826

RESULTANT JOINT LOADS - SUPPORTS

JOINT	FORCE: X FORCE	FORCE: Y FORCE	FORCE: Z FORCE	MOMENT: X MOMENT	MOMENT: Y MOMENT	MOMENT: Z MOMENT
3	-2.9999990	1.7499990				0.0000001
4	-0.0000000	12.2499952				0.0000000

RESULTANT JOINT DISPLACEMENTS - SUPPORTS

JOINT	DISPLACEMENT: X DISP.	DISPLACEMENT: Y DISP.	DISPLACEMENT: Z DISP.	ROTATION: X ROT.	ROTATION: Y ROT.	ROTATION: Z ROT.
3	0.0	0.0				-0.0001657
4	0.0069334	0.0				-0.0000001

RESULTANT JOINT DISPLACEMENTS - FREE JOINTS

JOINT	DISPLACEMENT: X DISP.	DISPLACEMENT: Y DISP.	DISPLACEMENT: Z DISP.	ROTATION: X ROT.	ROTATION: Y ROT.	ROTATION: Z ROT.
1	0.0137792	-0.0027389				-0.0001381
2	0.0116874	-0.0125201				-0.0001048

LOADING - 2 HORIZONTAL LOAD

MEMBER FORCES

MEMBER	JOINT	FORCE AXIAL	FORCE SHEAR Y	FORCE SHEAR Z	MOMENT TORSIONAL	MOMENT BENDING Y	MOMENT BENDING Z
1	3	10.3870182	-0.2456076				-12.3027210
1	1	-10.3870182	0.2456076				-5.3810225
2	1	0.6536542	0.0287392				1.6588306
2	2	-0.6536542	-0.0287392				1.1001310
3	4	-2.4569788	-0.2456076				-10.4403896
3	2	2.4569788	0.2456076				-7.2433586
4	3	3.9375343	0.0821497				3.7147369
4	2	-3.9375343	-0.0821497				6.1432257
5	3	0.6536545	0.1847362				8.5879831
5	4	-0.6536545	-0.1847362				9.1466904
6	1	-0.5414079	0.0417991				3.7221928
6	4	0.5414079	-0.0417991				1.2936974

RESULTANT JOINT LOADS - SUPPORTS

JOINT	FORCE X FORCE	FORCE Y FORCE	FORCE Z FORCE	MOMENT X MOMENT	MOMENT Y MOMENT	MOMENT Z MOMENT
3	3.9999990	12.9999943				0.0000006
4	-0.0000000	-2.9999990				0.0000000

RESULTANT JOINT DISPLACEMENTS - SUPPORTS

JOINT	DISPLACEMENT X DISP.	DISPLACEMENT Y DISP.	DISPLACEMENT Z DISP.	ROTATION X ROT.	ROTATION Y ROT.	ROTATION Z ROT.
3	0.0	0.0				0.0001071
4	-0.0020917	0.0				0.0001294

RESULTANT JOINT DISPLACEMENTS - FREE JOINTS

JOINT	DISPLACEMENT X DISP.	DISPLACEMENT Y DISP.	DISPLACEMENT Z DISP.	ROTATION X ROT.	ROTATION Y ROT.	ROTATION Z ROT.
1	-0.0132447	-0.0124644				0.0001901
2	-0.0153364	0.0029484				0.0001678

LOADING - 3

MEMBER FORCES

MEMBER	JOINT	FORCE AXIAL	FORCE SHEAR Y	FORCE SHEAR Z	MOMENT TORSIONAL	MOMENT BENDING Y	MOMENT BENDING Z
1	3	12.0988503	-0.0400944				-5.7684793
1	1	-12.0988503	0.0400944				2.8816910
2	1	1.1439304	0.0058235				0.2466965
2	2	-1.1439304	-0.0058235				0.3123634
3	4	5.3681049	-0.1748124				-4.6194639
3	2	-5.3681049	0.1748124				-7.9670267
4	3	3.4206457	0.0921015				3.3975201
4	2	-3.4206457	-0.0921015				7.6546631
5	3	-0.9713500	0.0875720				2.3709602
5	4	0.9713500	-0.0875720				6.0359488
6	1	1.4611082	-0.0378740				-3.1283875
6	4	-1.4611082	0.0378740				-1.4164886

RESULTANT JOINT LOADS - SUPPORTS

JOINT	FORCE X FORCE	FORCE Y FORCE	FORCE Z FORCE	MOMENT X MOMENT	MOMENT Y MOMENT	MOMENT Z MOMENT
3	1.7499990	14.3124905				0.0000007
4	-0.0000000	6.1874952				0.0000000

RESULTANT JOINT DISPLACEMENTS - SUPPORTS

JOINT	DISPLACEMENT X DISP.	DISPLACEMENT Y DISP.	DISPLACEMENT Z DISP.	ROTATION X ROT.	ROTATION Y ROT.	ROTATION Z ROT.
3	0.0	0.0				-0.0000173
4	0.0031083	0.0				0.0001293

RESULTANT JOINT DISPLACEMENTS - FREE JOINTS

JOINT	DISPLACEMENT X DISP.	DISPLACEMENT Y DISP.	DISPLACEMENT Z DISP.	ROTATION X ROT.	ROTATION Y ROT.	ROTATION Z ROT.
1	-0.0029103	-0.0145186				0.0000865
2	-0.0065709	-0.0064417				0.0000892

Discussion

Changing the structure from a truss, presented in Chapter 2, to a plane frame requires the addition of the moment of inertia of the members. The minimum section properties required for the stiffness analysis of a plane frame structure are AX and IZ (or IY).

Note, that if it were desirable to analyze the structure, the one submittal, first as a truss and then as a framed structure, the structure can be coded as a truss and then using the 'CHANGES' command, the structure can be changed to a plane frame structure.

Shown in Figure 3.5d is a free body diagram of the frame for LOADING COMBINATION 3. The orientation of each of the local member axes is also shown. The free body diagram of joint 3 is shown in Figure 3.5e. The joint reactions shown are in the global coordinate system and the member end forces in the local coordinate system.

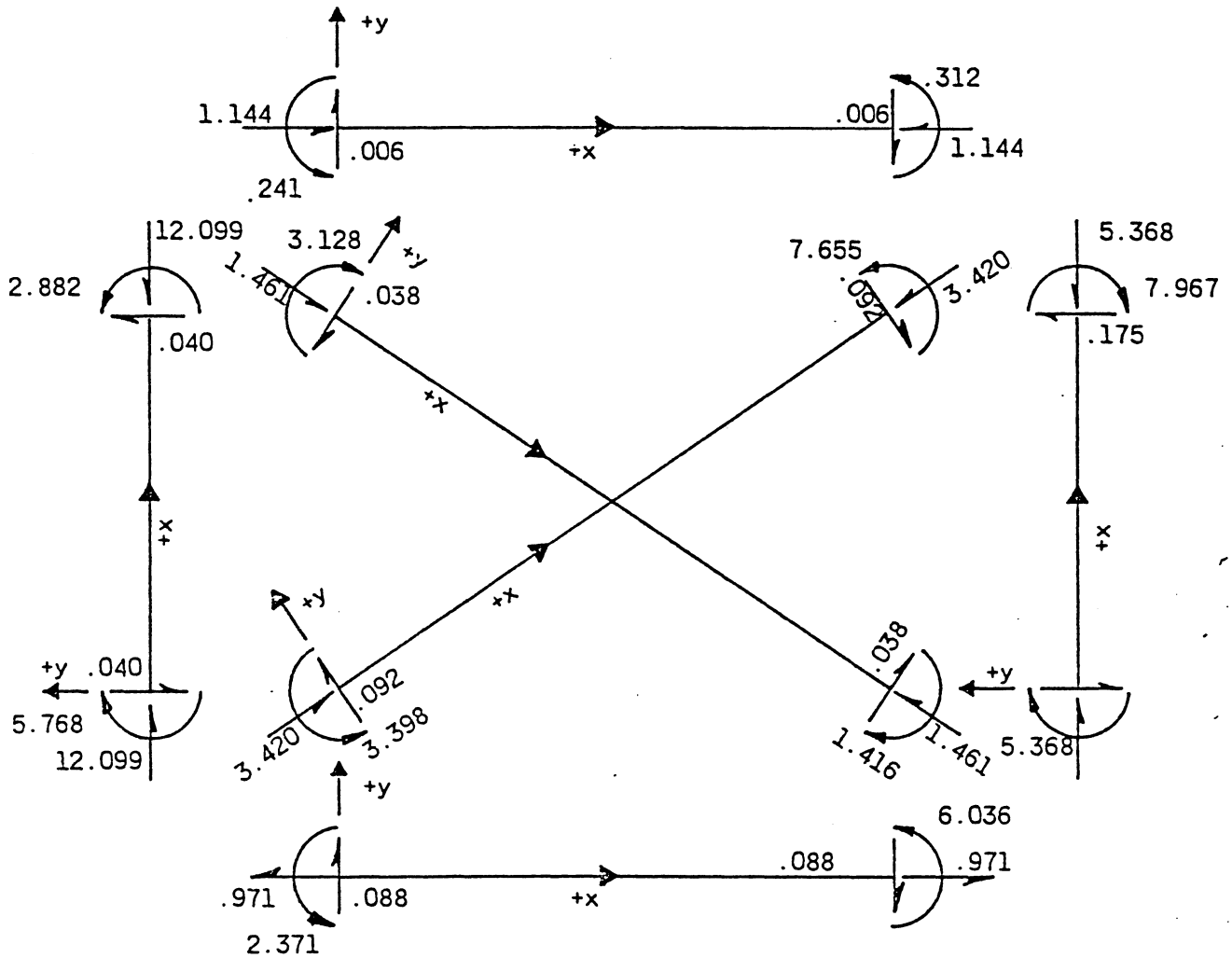

Fig. 3.5d

NOTE: Member results are given in Local Coordinate System

FREE BODY DIAGRAMS AND LOCAL COORDINATE SYSTEMS
Results of Loading Combination No. 3

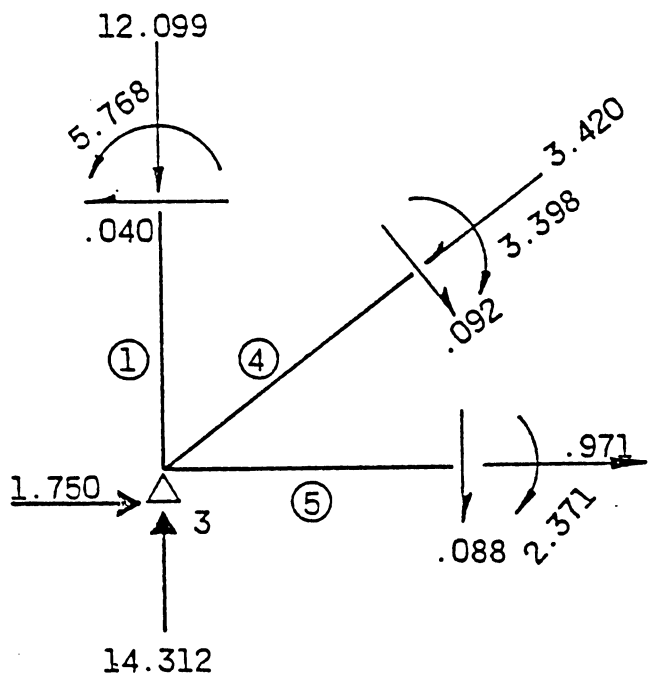

JOINT 3 FORCES LOADING COMBINATION 3

Fig. 3.5e

Check Joint 3 Forces;

1) $\Sigma V = 0$;

Member 1 V =	= -12.099
Member 4 V = 8/10 (-.092) + .6/10 (-3.420)	= - 2.136
Member 5 V =	= - .088
Resultant Joint 3 Y Load	= +14.312
ΣV	= - .001

2) $\Sigma H = 0$

Member 1 H =	- .040
Member 4 H = 6/10 (.092) + 8/10 (-3.420)	= - 2.681
Member 5 H =	= + .971
Resultant Joint 3 X Load	= + 1.750
ΣH	= .000

3) $\Sigma M = 0$;

Member 1 M =	= + 5.768
Member 4 M =	= - 3.398
Member 5 M =	= - 2.371
Resultant Joint 3 M	= 0
ΣM	= - .001

3.6 Problem Modification Flexible Diagonals and Elastic Supports

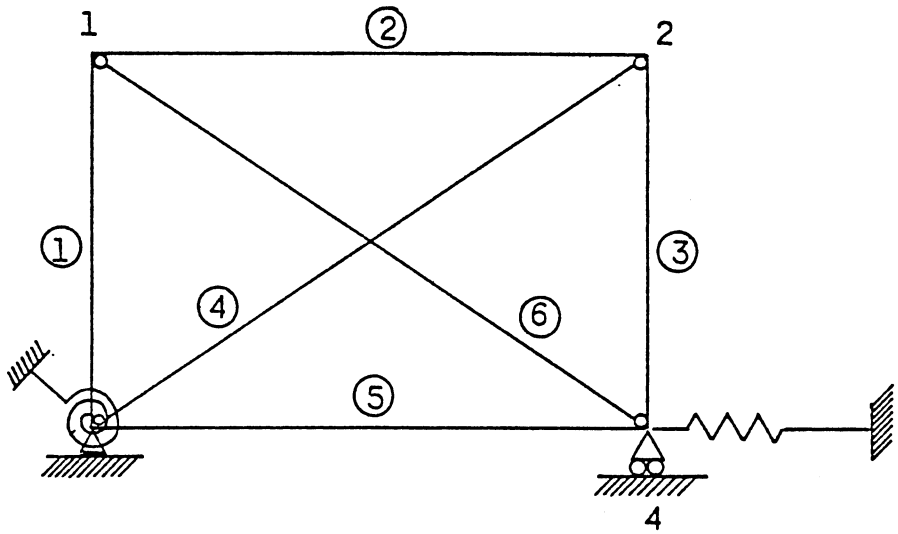

Fig. 3.6a

Let us consider additional changes in the structure given in Problem 3.5. Assume the diagonal bracing members are pin-connected at both ends and that the supports at joints 3 and 4 are restrained elastically as shown.

To make these changes and re-analyze the structure in the same submittal, we use the following commands:

STATE OF CALIFORNIA - BUSINESS AND TRANSPORTATION AGENCY - DEPARTMENT OF PUBLIC WORKS - DIVISION OF ADMINISTRATIVE SERVICES

COMPUTER SYSTEMS

ICES

SUBSYSTEM NAME	SOURCE DIST. UNIT	CHARGE DIST. UNIT	EXPENDITURE AUTHORIZATION	SPECIAL DESIGNATION WHEN APPLICABLE	SEQUENCE
					0001

CHANGE ID 'PROB 3.6' 'FLEXIBLE DIAGONALS AND ELASTIC SUPPORTS	600
MEMBER 4 6 RELEASE START MOMENT Z END MOMENT Z	610
DELETIONS	620
JOINT 3 RELEASES MOMENT Z	627
JOINT 4 RELEASES FORCE X	633
ADDITIONS	640
JOINT RELEASES	650
3 KMZ 167.E3	660
4 KFX 375.	670
PRINT STRUCTURAL DATA	680
STIFFNESS ANALYSIS	690
LIST FORCES DISPLACEMENTS REACTIONS	700

Note that the CHANGE ID 'PROB. 3.6' 'FLEXIBLE DIAGONALS' does not constitute a 'CHANGES' mode command and the problem is still in the 'ADDITIONS' mode. Therefore, the 'ADDITIONS' command was not necessary when calling for the member release, (An addition to the original problem).

The support at joint 3 is now elastically restrained from rotating about the global Z-axis and the roller support at joint 4 is now elastically restrained from displacing in the global X direction. The previously specified joint releases in these directions must be deleted, since an elastic support direction cannot correspond to a release direction. Note that joint 4 is still free to rotate. The joint releases are deleted using the commands on lines 0620 to 0633. The elastic stiffness coefficients are specified using the 'JOINT RELEASES' command.

The 'PRINT STRUCTURAL' command is issued to permit verification of the modified structure.

For this example Prob. 3.5 and 3.6 were processed in the same submittal. If it were desirable to process Prob. 3.6 at a future date, Prob. 3.5 would be saved and restored when Prob. 3.6 was processed. The "SAVE" and then "RESTORE" commands are discussed in Chapter IV.

Following is the output for Prob. 3.6.

```
CHANGE ID 'PROB 3.6' 'FLEXIBLE DIAGONALS AND ELASTIC SUPPORTS'   $ 14T 61    0600
MEMBER 4 6 RELEASE START MOMENT Z END MOMENT Z                   $ 14T 61    0610
DELETIONS                                                        $ 14T 61    0620
JOINT 3 RELEASES MOMENT Z                                        $ 14T 61    0627
JOINT 4 RELEASES FORCE X                                         $ 14T 61    0633
ADDITIONS                                                        $ 14T 61    0640
JOINT RELEASES                                                   $ 14T 61    0650
3 KMZ 167.E3                                                     $ 14T 61    0660
4  KFX 375.                                                      $ 14T 61    0670
PRINT STRUCTURAL DATA                                            $ 14T 61    0680
```

```
*****************************************
*  PROBLEM DATA FROM INTERNAL STORAGE   *
*****************************************

JOB ID -  PROB 3.6.    JOB TITLE - FLEXIBLE DIAGONALS AND ELASTIC SUPPORTS

ACTIVE UNITS -  LENGTH        WEIGHT        ANGLE        TEMPERATURE       TIME
                  INCH          KIP           RAD            DEGF            SEC

          ********** STRUCTURAL DATA **********


ACTIVE STRUCTURE TYPE - PLANE   FRAME

ACTIVE COORDINATE AXES  X Y

JOINT COORDINATES-----------------------------------------/  STATUS---/
JOINT            X            Y            Z      CONDITION

1              0.0         72.000        0.0                  ACTIVE
2             96.000       72.000        0.0                  ACTIVE
3              0.0          0.0          0.0     SUPPORT      ACTIVE
4             96.000        0.0          0.0     SUPPORT      ACTIVE


JOINT RELEASES-----------------------------------/ELASTIC SUPPORT RELEASES-----------------------------------------------/
JOINT   FORCE  MOMENT   THETA 1  THETA 2  THETA 3     KFX          KFY          KFZ          KMX          KMY          KMZ
3                        0.0      0.0      0.0        0.0          0.0          0.0          0.0          0.0     146999.937
4                  Z     0.0      0.0      0.0      375.000        0.0          0.0          0.0          0.0          0.0


MEMBER INCIDENCES----------/ LENGTH------/   RELEASES--------------------/ STATUS--/
MEMBER   START     END       LOCAL COORD.        START            END
                                             FORCE  MOMENT   FORCE  MOMENT

1        3         1            72.000                                      ACTIVE
2        1         2            96.000                                      ACTIVE
3        4         2            72.000                                      ACTIVE
4        3         2           120.000                Z               Z    ACTIVE
5        3         4            96.000                                      ACTIVE
6        1         4           120.000                Z               Z    ACTIVE


MEMBER PROPERTIES-----------------------------------------------------------------------------------------------/
MEMBER/SEG TYPE        SEG.L   COMP  AX/YD     AY/ZD     AZ/YC     IX/ZC     IY/EY     IZ/EZ      SY        SZ

1        PRISMATIC                   2.000     0.0       0.0       0.0       0.0     100.000     0.0       0.0
                                     0.0       0.0       0.0       0.0       0.0       0.0
2        PRISMATIC                   1.000     0.0       0.0       0.0       0.0      40.000     0.0       0.0
                                     0.0       0.0       0.0       0.0       0.0       0.0
3        PRISMATIC                   2.000     0.0       0.0       0.0       0.0     100.000     0.0       0.0
                                     0.0       0.0       0.0       0.0       0.0       0.0
4        PRISMATIC                   1.500     0.0       0.0       0.0       0.0      80.000     0.0       0.0
                                     0.0       0.0       0.0       0.0       0.0       0.0
5        PRISMATIC                   1.000     0.0       0.0       0.0       0.0      40.000     0.0       0.0
                                     0.0       0.0       0.0       0.0       0.0       0.0
6        PRISMATIC                   1.500     0.0       0.0       0.0       0.0      80.000     0.0       0.0
                                     0.0       0.0       0.0       0.0       0.0       0.0
```

MEMBER CONSTANTS----------/

CONSTANT	STANDARD VALUE	DOMAIN.	VALUE	MEMBER LIST
E	29999.996094	ALL		
G	0.0	ALL		
DENSITY	0.001000	ALL		
CTE	1.000000	ALL		
BETA	0.0	ALL		
POISSON	0.0	ALL		

```
*************************************
* END OF DATA FROM INTERNAL STORAGE *
*************************************
```

STIFFNESS ANALYSIS $ 14T 41 0690

LIST FORCES DISPLACEMENTS REACTIONS $ 14T 41 0750

```
****************************
**ESULTS OF LATEST ANALYSES*
****************************
```

PROBLEM - PROB 3.6 TITLE - FLEXIBLE DIAGONALS AND ELASTIC SUPPORTS

ACTIVE UNITS INCH KIP RAD DEGF SEC

ACTIVE STRUCTURE TYPE PLANE FRAME

ACTIVE COORDINATE AXES X Y

LOADING - 1 INCLINED LOAD

MEMBER FORCES

MEMBER	JOINT	FORCE AXIAL	FORCE SHEAR Y	FORCE SHEAR Z	MOMENT TORSIONAL	MOMENT BENDING Y	MOMENT BENDING Z
1	3	2.1557550	0.2602751				14.6130066
1	1	-2.1557550	-0.2602751				4.1268120
2	1	0.3647944	-0.0630464				-4.1268120
2	2	-0.3647944	0.0630464				-1.9256439
3	4	10.2674913	0.0921959				4.7124567
3	2	-10.2674913	-0.0921959				1.9256439
4	3	-0.3407493	0.0000000				0.0000000
4	2	0.3407493	-0.0000000				0.0000000
5	3	-1.1214199	-0.0970445				-4.6038113
5	4	1.1214199	0.0970445				-4.7124567
6	1	2.9646623	-0.0000000				0.0000000
6	4	-2.9646623	0.0000000				-0.0000000

RESULTANT JOINT LOADS - SUPPORTS

JOINT	FORCE X FORCE	FORCE Y FORCE	FORCE Z FORCE	MOMENT X MOMENT	MOMENT Y MOMENT	MOMENT Z MOMENT
3	-1.6542940	1.9542614				10.0091944
4	-1.3457041	12.1457329				0.0000000

RESULTANT JOINT DISPLACEMENTS - SUPPORTS

JOINT	DISPLACEMENT X DISP.	DISPLACEMENT Y DISP.	DISPLACEMENT Z DISP.	ROTATION X ROT.	ROTATION Y ROT.	ROTATION Z ROT.
3	0.0	0.0				-0.0000599
4	0.0035885	0.0				-0.0000643

RESULTANT JOINT DISPLACEMENTS - FREE JOINTS

JOINT	DISPLACEMENT X DISP.	DISPLACEMENT Y DISP.	DISPLACEMENT Z DISP.	ROTATION X ROT.	ROTATION Y ROT.	ROTATION Z ROT.
1	0.0115439	-0.0025860				-0.0001858
2	0.0103766	-0.0123210				-0.0000977

LOADING - 2 HORIZONTAL LOAD

MEMBER FORCES

MEMBER	JOINT	FORCE AXIAL	FORCE SHEAR Y	FORCE SHEAR Z	MOMENT TORSIONAL	MOMENT BENDING Y	MOMENT BENDING Z
1	3	10.4449347	-0.2717595				-16.0454187
1	1	-10.4448347	0.2717595				-3.4811869
2	1	0.7709953	0.0704089				3.4811869
2	2	-0.7709953	-0.0704089				3.2780714
3	4	-2.3702688	-0.1625237				-8.4236355
3	2	2.3702688	0.1625237				-3.2780714
4	3	3.8331003	0.0000000				0.0000000
4	2	-3.8331033	-0.0000000				0.0000000
5	3	0.3008000	0.1542998				6.3891401
5	4	-0.3008000	-0.1542998				8.4236355
6	1	-0.6240458	-0.0000000				0.0000000
6	4	0.6240458	0.0000000				-0.0000000

RESULTANT JOINT LOADS - SUPPORTS

JOINT	FORCE X FORCE	FORCE Y FORCE	FORCE Z FORCE	MOMENT X MOMENT	MOMENT Y MOMENT	MOMENT Z MOMENT
3	3.6390390	12.8989944				-9.6962881
4	0.3609601	-2.8989964				-0.0000000

RESULTANT JOINT DISPLACEMENTS - SUPPORTS

JOINT	DISPLACEMENT X DISP.	DISPLACEMENT Y DISP.	DISPLACEMENT Z DISP.	ROTATION X ROT.	ROTATION Y ROT.	ROTATION Z ROT.
3	0.0	0.0				0.0000581
4	-0.0009626	0.0				0.0001394

RESULTANT JOINT DISPLACEMENTS - FREE JOINTS

JOINT	DISPLACEMENT X DISP.	DISPLACEMENT Y DISP.	DISPLACEMENT Z DISP.	ROTATION X ROT.	ROTATION Y ROT.	ROTATION Z ROT.
1	-0.0124431	-0.0125338				0.0002093
2	-0.0149102	0.0028443				0.0002012

LOADING - 3

MEMBER FORCES

MEMBER	JOINT	FORCE AXIAL	FORCE SHEAR Y	FORCE SHEAR Z	MOMENT TORSIONAL	MOMENT BENDING Y	MOMENT BENDING Z
1	3	12.0616512	-0.0765522				-5.1256790
1	1	-12.0616512	0.0765522				-0.3860778
2	1	1.0445910	0.0231241				0.3860778
2	2	-1.0445910	-0.0231241				1.8338385
3	4	5.3303471	-0.0933768				-4.8892918
3	2	-5.3303471	0.0933768				-1.8338385
4	3	3.5775394	0.0000000				0.0000000
4	2	-3.5775394	-0.0000000				0.0000000
5	3	-0.5402653	0.0815164				2.9362803
5	4	0.5402653	-0.0815164				4.8892918
6	1	1.6024594	-0.0000000				0.0000000
6	4	-1.6024594	0.0000000				-0.0000000

RESULTANT JOINT LOADS - SUPPORTS

JOINT	FORCE X FORCE	FORCE Y FORCE	FORCE Z FORCE	MOMENT X MOMENT	MOMENT Y MOMENT	MOMENT Z MOMENT
3	2.3983173	14.2896900				-2.1893940
4	-0.6483193	6.2102995				0.0000000

RESULTANT JOINT DISPLACEMENTS - SUPPORTS

JOINT	DISPLACEMENT X DISP.	DISPLACEMENT Y DISP.	DISPLACEMENT Z DISP.	ROTATION X ROT.	ROTATION Y ROT.	ROTATION Z ROT.
3	0.0	0.0				0.0000131
4	0.0017288	0.0				0.0000912

RESULTANT JOINT DISPLACEMENTS - FREE JOINTS

JOINT	DISPLACEMENT X DISP.	DISPLACEMENT Y DISP.	DISPLACEMENT Z DISP.	ROTATION X ROT.	ROTATION Y ROT.	ROTATION Z ROT.
1	-0.0037851	-0.0144740				0.0000700
2	-0.0071278	-0.0063964				0.0001279

3.7 Variable Member Properties Problem - Tapered Columns

The example problem in Figure 3.7a illustrates how the STRUDL program may be used to analyze a structure with variable member properties. The two loading conditions imposed on the structure are shown in Figure 3.7b. The member loads are considered in the first loading condition, and the support displacements constitute the second loading condition.

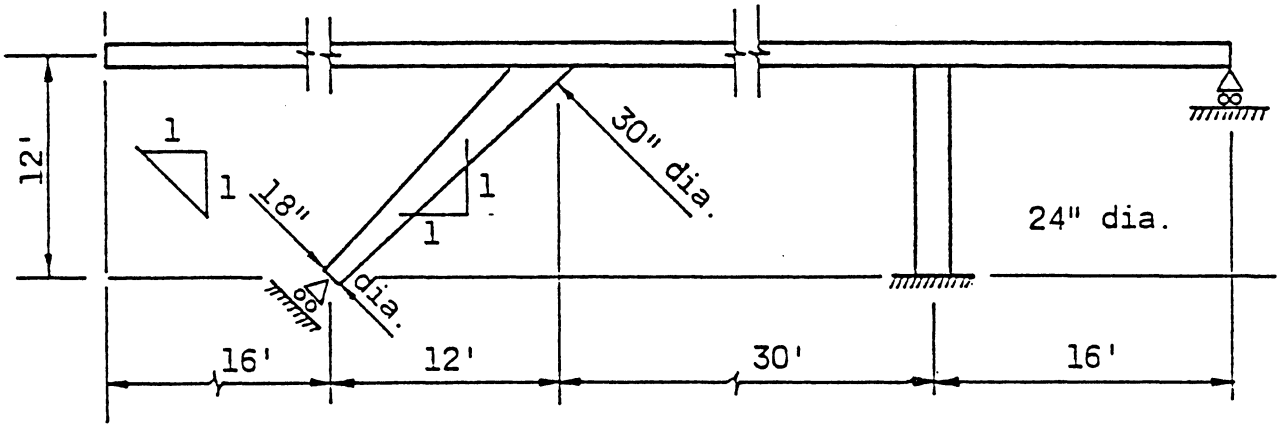

Fig. 3.7a

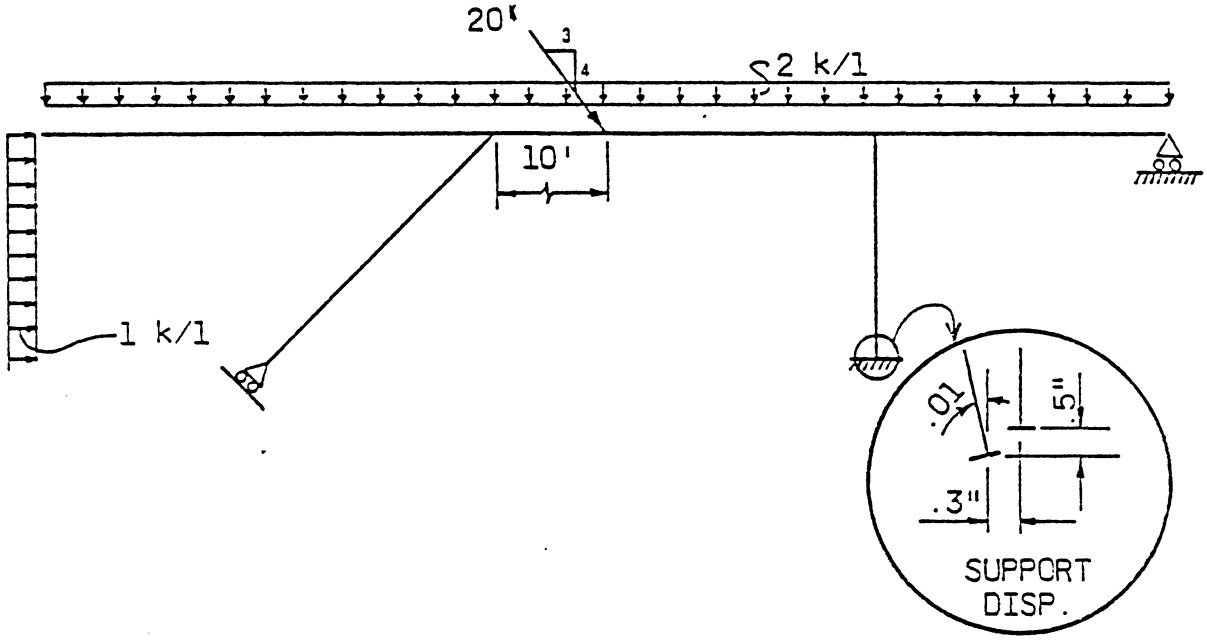

Fig. 3.7b

LOADING

Initially, the structure is analyzed without regard to the support width, i.e., the member is modeled as a line element extending to the joint centers. A second analysis is performed for the first loading condition with the member end joint size considered. For this particular problem the line approximation yields results comparable to the results which include the column width in calculating the stiffness of the member. The member end results are summarized in Table 3.7a following the output results. For structures with larger support width relative to their span lengths the results of the second type of analysis will be more appreciable.

STRUDL's graphical output facilities provide a useful tool to verify input data and also to visualize the forces and moments resisted by individual members. In this problem the command needed to obtain a printer plot of the geometry of the structure and individual member force diagrams will be illustrated. At the present time only printer plots are available.

The structure is described using the joint and the member numbering shown in Figure 3.7c.

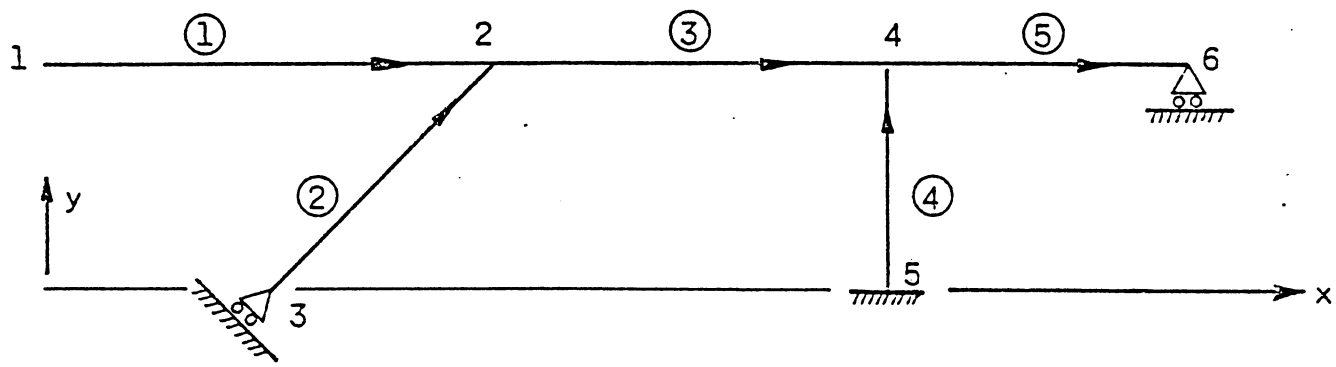

Fig. 3.7c

The following commands describe the structural geometry and topology:

STATE OF CALIFORNIA - BUSINESS AND TRANSPORTATION AGENCY - DEPARTMENT OF PUBLIC WORKS - DIVISION OF ADMINISTRATIVE SERVICES

COMPUTER SYSTEMS

ICES

SUBSYSTEM NAME	SOURCE DIST. UNIT	CHARGE DIST. UNIT	EXPENDITURE AUTHORIZATION	SPECIAL DESIGNATION WHEN APPLICABLE	SEQUENCE
STRUDL 'PROB 3.7' 'TAPERED COLUMN'					0001
TYPE PLANE FRAME					20
UNITS FEET DEGREES					30
JOINT COORDINATES					40
1 0. 12.					50
2 28. 12.					60
3 16. SUPPORT					70
4 58. 12.					80
5 58. SUPPORT					90
6 74. 12. SUPPORT					100

When the coordinates are not labeled, STRUDL will assume that they are in the order of X, Y and Z. Note that no value was given for the Y coordinate of joints 3 and 5 so STRUDL will assume that they are equal to zero.

```
MEMBER INCIDENCES                                    110
    1 1 2                                            120
    2 3 2                                            130
    3 2 4                                            140
    4 5 4                                            150
    5 4 6                                            160
JOINT RELEASES                                       170
    3 FORCE X MOMENT Z TH1 135.                      180
    6 FORCE X MOMENT Z                               190
```

Since the direction of the local Y-axis, of Member 2, is the same as the release direction and only one member is incident on joint 3 a member release can be specified instead of a joint release. The advantage in doing this is that the coding is simplified.

For example:

Instead of: JOINT RELEASE

3 FORCE X MOMENT Z TH1 135.

Use: MEMBER RELEASE

2 START FORCE Y MOMENT Z.

The disadvantage is that the reported joint displacements will not reflect the displacement of the joint. Note that when the member release command was used the TH1 angle was not specified.

The variable member is modeled with three equal segments as shown in Figure 3.7d. The commands describing the variable section are shown on lines 0230 to 0260.

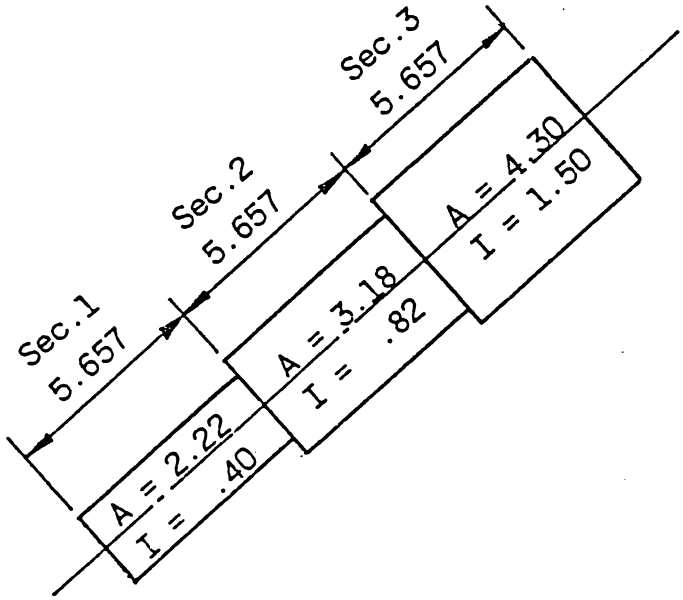

MODEL OF COLUMN MEMBER

Fig. 3.7d

```
MEMBER PROPERTIES                                                    200
      1 3 5 PRISMATIC AX 3.75 IZ 1.96                                210
      4 PRISMATIC AX 3.14 IZ .736                                    220
      2 VARIABLE                                                     230
            SEG 1 AX 2.22 IZ .40 L 5.657                             240
            SEG 2 AX 3.18 IZ .82 L 5.657                             250
            SEG 3 AX 4.30 IZ 1.50 L 5.657                            260
UNITS KIPS INCHES                                                    270
CONSTANTS E 3000. ALL                                                280
UNITS FEET                                                           290
```

The loads shown in Figure 3.7b are described in LOADING 1 and the support settlement in LOADING 2. Since the direction of the loads must be parallel to the local or global axes the concentrated load on member 3 is resolved into components parallel to the local X and Y axes as shown in Figure 3.7e.

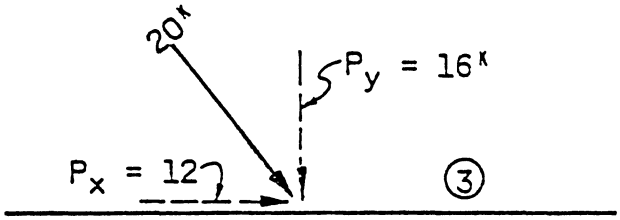

MEMBER 3

Fig.3.7e

```
LOADING 1 'ALL LOADS SHOWN'                                                    300
    MEMBER LOADS                                                               310
    1 3 5 FORCE Y UNIFORM W -2.                                                320
    3 FORCE X GLOBAL CONCENTRATED P 12.0 L 10.0 $ HOR. COMP.                   330
    3 FORCE Y GLOBAL CONCENTRATED P -16.0 L 10. $ VERT. COMP.                  340
    2 FORCE X GLOBAL PRO UNI W 1.0 $ HOR. LOAD TAPERED COL.                    350
```

The uniform loading on member 2, the inclined member, may be specified in one of three ways as illustrated in Figure 3.7f. For all three cases the local coordinate system is used to describe the distances along the member to the starting point and ending point of the uniform load. The loading given extends over the entire length of the member, thus these distances are omitted.

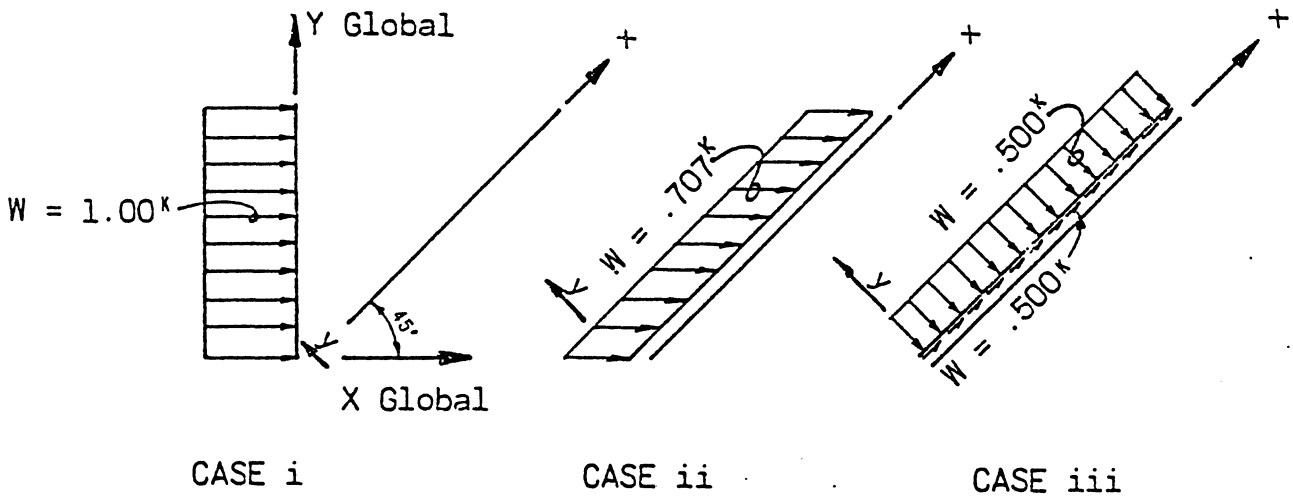

MEMBER 2

Fig.3.7f

The direction of the load is parallel to the global X axis and may be specified as acting in the direction of X-GLOBAL for case i and case ii.

The loading intensity can be described as a function of the length of the member, as it is for case ii; or it may be described as a function of the projected length of the member on a plane perpendicular to the direction of the loading as it is in case i.

The STRUDL command for case i which is used in our example is:

```
FORCE X GLOBAL PROJECTED UNIFORM W 1.0
```

This form of the command is useful in applying wind loadings to a structure.

The load intensity may also be described as a function of the length of the member as is case ii. The STRUDL command for case ii is:

```
FORCE X GLOBAL UNIFORM W .707
```

Note that the intensity has been reduced to correspond to the length of the member. This form of the command is useful in describing the dead load of a structure.

The loading may also be resolved into components in the direction of the local coordinate system. The components being axial (i.e., in the direction of the positive local X axis), and normal (i.e., in the negative direction of the local Y axis) to the member. The STRUDL commands for this case are:

```
FORCE X UNIFORM W 0.50
FORCE Y UNIFORM W 0.50
```

The intensities now are the components of the load intensity for case ii.

The following is the coding for the second loading condition - support settlement.

```
LOADING 2 'SETTLEMENT OF JT. 5'                                  351
UNITS INCHES RADIANS                                             352
JOINT 5 DISPLACEMENT DISP X -.3 Y -.5 ROTATION Z .01             353
LOADING LIST ALL                                                 360
PRINT DATA                                                       370
STIFFNESS ANALYSIS                                               380
OUTPUT DECIMAL 3                                                 381
UNITS FEET                                                       382
LIST FORCES REACTIONS DISPLACEMENTS                              390
```

Note that the joint displacements must be given in the global coordinate system.

The commands on lines 370 to 390 are sufficient to verify the STRUDL commands previously given and perform a STRUDL analysis. The following computer output is the result of all commands given from line 1 to 390.

```
STRUDL 'PROB 3.7' 'TAPERED COLUMN' $                                  $ 14T 62    0001

          ************************************************
          *                                              *
          *     ICES STRUDL II       VERSION 1 MOD 1     *
          *       THE STRUCTURAL DESIGN LANGUAGE         *
          *    MASSACHUSETTS INSTITUTE OF TECHNOLOGY     *
          *              STATE OF CALIFORNIA             *
          *     BRIDGE DEPARTMENT DIVISION OF HWYS.      *
          *    SPECIAL STUDIES SECTION  PH. 445-6519     *
          *     NOVEMBER 1969  INSTALLED APRIL 1970      *
          *           17:19:15        6/11/70            *
          *                                              *
          ************************************************

TYPE PLANE FRAME                                                      $ 14T 62    0020

UNITS FEET DEGREES                                                    $ 14T 62    0030

JOINT COORDINATES                                                     $ 14T 62    0040

     1 0. 12.                                                         $ 14T 62    0050

     2 28. 12.                                                        $ 14T 62    0060

     3 16. SUPPORT                                                    $ 14T 62    0070

     4 58. 12.                                                        $ 14T 62    0080

     5 58. SUPPORT                                                    $ 14T 62    0090

     6 74. 12. SUPPORT                                                $ 14T 62    0100

MEMBER INCIDENCES                                                     $ 14T 62    0110

     1 1 2                                                            $ 14T 62    0120

     2 3 2                                                            $ 14T 62    0130

     3 2 4                                                            $ 14T 62    0140

     4 5 4                                                            $ 14T 62    0150

     5 4 6                                                            $ 14T 62    0160

JOINT RELEASES                                                        $ 14T 62    0170

     3 FORCE X MOMENT Z TH1 135.                                      $ 14T 62    0180

     6 FORCE X MOMENT Z                                               $ 14T 62    0190

MEMBER PROPERTIES                                                     $ 14T 62    0200

     1 3 5 PRISMATIC AX 3.75 IZ 1.96                                  $ 14T 62    0210

     4 PRISMATIC AX 3.14 IZ .786                                      $ 14T 62    0220

     2 VARIABLE                                                       $ 14T 62    0230

          SEG 1 AX 2.22 IZ .40 L 5.657                                $ 14T 62    0240

          SEG 2 AX 3.18 IZ .82 L 5.657                                $ 14T 62    0250

          SEG 3 AX 4.30 IZ 1.50 L 5.657                               $ 14T 62    0260

UNITS KIPS INCHES                                                     $ 14T 62    0270

CONSTANTS E 3000. ALL                                                 $ 14T 62    0280

UNITS FEET                                                            $ 14T 62    0290
```

```
LOADING 1 'ALL LOADS SHOWN'                                          $ 14T 62    0300
     MEMBER LOADS                                                    $ 14T 62    0310
     1 3 5 FORCE Y UNIFORM W -2.                                     $ 14T 62    0320
     3 FORCE X GLOBAL CONCENTRATED P 12.0 L 10.0 $ HOR. COMP.        $ 14T 62    0330
     3 FORCE Y GLOBAL CONCENTRATED P -16.0 L 10. $ VERT. COMP.       $ 14T 62    0340
     2 FORCE X GLOBAL PRO UNI W 1.0 $ HOR. LOAD TAPERED COL.         $ 14T 62    0350
LOADING 2 'SETTLEMENT OF JT. 5'                                      $ 14T 62    0351
UNITS INCHES RADIANS                                                 $ 14T 62    0352
JOINT 5 DISPLACEMENT DISP X -.3 Y -.5 ROTATION Z .01                 $ 14T 62    0353
LOADING LIST ALL                                                     $ 14T 62    0360
PRINT DATA                                                           $ 14T 62    0370
```

```
*****************************************
*  PROBLEM DATA FROM INTERNAL STORAGE  *
*****************************************

JOB ID -  PROB 3.7     JOB TITLE - TAPERED COLUMN

ACTIVE UNITS -  LENGTH        WEIGHT        ANGLE        TEMPERATURE      TIME
                  INCH          KIP           RAD            DEGF           SEC

          ********** STRUCTURAL DATA **********


ACTIVE STRUCTURE TYPE - PLANE   FRAME

ACTIVE COORDINATE AXES  X Y

JOINT COORDINATES-----------------------------------------/  STATUS---/
JOINT            X            Y            Z     CONDITION

1              0.0        144.000        0.0                  ACTIVE
2            336.000      144.000        0.0                  ACTIVE
3            192.000        0.0          0.0     SUPPORT      ACTIVE
4            696.000      144.000        0.0                  ACTIVE
5            696.000        0.0          0.0     SUPPORT      ACTIVE
6            888.000      144.000        0.0     SUPPORT      ACTIVE


JOINT RELEASES-----------------------------------/ELASTIC SUPPORT RELEASES-----------------------------------------------/
JOINT   FORCE  MOMENT   THETA 1  THETA 2  THETA 3     KFX          KFY          KFZ          KMX          KMY          KMZ
3       X         Z      2.356    0.0      0.0        0.0          0.0          0.0          0.0          0.0          0.0
6       X         Z      0.0      0.0      0.0        0.0          0.0          0.0          0.0          0.0          0.0


MEMBER INCIDENCES----------/ LENGTH------/   RELEASES--------------------/ STATUS--/
MEMBER   START      END       LOCAL COORD.        START            END
                                              FORCE  MOMENT   FORCE  MOMENT

1        1          2            336.000                                    ACTIVE
2        3          2            203.647                                    ACTIVE
3        2          4            360.000                                    ACTIVE
4        5          4            144.000                                    ACTIVE
5        4          6            192.000                                    ACTIVE


MEMBER PROPERTIES-----------------------------------------------------------------------------------------------/
MEMBER/SEG TYPE        SEG.L   COMP  AX/YO     AY/ZO     AZ/YO     IX/ZO     IY/EY     IZ/EZ      SY        SZ

1        PRISMATIC                  540.000     0.0       0.0       0.0       0.0    40642.539    0.0       0.0
                                      0.0       0.0       0.0       0.0       0.0       0.0
2        VARIABLE
     1                 67.884  L    319.680     0.0       0.0       0.0       0.0     8294.398    0.0       0.0
                                      0.0       0.0       0.0       0.0       0.0       0.0
     2                 67.884  L    457.920     0.0       0.0       0.0       0.0    17003.520    0.0       0.0
                                      0.0       0.0       0.0       0.0       0.0       0.0
     3                 67.884  L    619.200     0.0       0.0       0.0       0.0    31104.000    0.0       0.0
                                      0.0       0.0       0.0       0.0       0.0       0.0
3        PRISMATIC                  540.000     0.0       0.0       0.0       0.0    40642.539    0.0       0.0
                                      0.0       0.0       0.0       0.0       0.0       0.0
4        PRISMATIC                  452.160     0.0       0.0       0.0       0.0    16299.492    0.0       0.0
                                      0.0       0.0       0.0       0.0       0.0       0.0
5        PRISMATIC                  540.000     0.0       0.0       0.0       0.0    40642.539    0.0       0.0
                                      0.0       0.0       0.0       0.0       0.0       0.0
```

```
MEMBER CONSTANTS-----------------------------------------------------------------------------------------------/
CONSTANT   STANDARD VALUE   DOMAIN,          VALUE       MEMBER LIST


   E          2999.999756    ALL

   G              0.0        ALL

DENSITY           0.001000   ALL

  CTE             1.000000   ALL

  BETA            0.0        ALL

POISSON           0.0        ALL



          ********** DESIGN DATA **********


USER DATA SET

PARAMETER DICTIONARY-----------------------------------------/
NAME        TREATMENT    STANDARD    L    W    A    TEMP TIME


STRUDL DATA SET

PARAMETER DICTIONARY-----------------------------------------/
NAME        TREATMENT    STANDARD    L    W    A    TEMP TIME

FYLD        STANDARD        36.00   -2    1
PF          STANDARD         1.00
FBLTUP      STANDARD         1.00
CODE        REQUIRED
KY          STANDARD         1.00
KZ          STANDARD         1.00
CB          STANDARD         1.00
LY          COMPUTE      QOSTULEN
LZ          COMPUTE      QOSTULEN
CMY         STANDARD         0.85
CMZ         STANDARD         0.85
UNLOF       COMPUTE      QOSTULEN
VALUES      STANDARD         1.00
TRACE       STANDARD         1.00
PRIDTA      STANDARD         1.00
TBLNAM      STANDARD      STEELWF
MXTRIALS    STANDARD        25.00
SECNDARY    STANDARD         1.00

USER DATA SET

CONSTRAINT DICTIONARY------------/
NAME                     RETRIEVAL


STRUDL DATA SET

CONSTRAINT DICTIONARY------------/
NAME                     RETRIEVAL

AX                       TABULAR
AY                       TABULAR
AZ                       TABULAR
IX                       TABULAR
IY                       TABULAR
IZ                       TABULAR
SY                       TABULAR
SZ                       TABULAR
YD                       TABULAR
ZD                       TABULAR
FLTK                     TABULAR
WBTK                     TABULAR
YC/AFL                   TABULAR
RY                       TABULAR
RZ                       TABULAR
COMP                     TABULAR
YC                       TABULAR
ZC                       TABULAR
WEIGHT                   TABULAR
```

```
********** LOADING DATA **********

LOADING - 1            ALL LOADS SHOWN                                                    STATUS - ACTIVE

MEMBER AND ELEMENT LOADS-------------------------------------------------------------------------------------------/
MEMBER/ELEMENT
1         UNIFORM   LOAD    FORCE  Y  FR   W    -0.167   LA  0.0     LB   1.000
2         UNIFORM   LOAD GL FORCE  X  FR   W     0.083   LA  0.0     LB   1.000
3         UNIFORM   LOAD    FORCE  Y  FR   W    -0.167   LA  0.0     LB   1.000
          CONCEN.   LOAD GL FORCE  X       P    12.000    L120.000
          CONCEN.   LOAD GL FORCE  Y       P   -16.000    L120.000
5         UNIFORM   LOAD    FORCE  Y  FR   W    -0.167   LA  0.0     LB   1.000

JOINT LOADS-----------------------------------------/ ------------------------------------/
JOINT     STEP   FORCE X          Y          Z      MOMENT X          Y          Z

JOINT DISPLACEMENTS---------------------------------/ ------------------------------------/
JOINT     STEP   DISP. X          Y          Z      ROT.   X          Y          Z

JOINT FORCE ASSUMPTIONS ---------------------------------------------------------------------------------------------/

JOINT     THETA  1        2        3     FORCE X          Y          Z      MOMENT X          Y          Z
NO ASSUMPTIONS GIVEN FOR THIS LOADING


MEMBER FORCE ASSUMPTIONS ---------------------/    ---------------------------------/

MEMBER       COMPONENT   DISTANCE     VALUE         COMPONENT   DISTANCE     VALUE
NO ASSUMPTIONS GIVEN FOR THIS LOADING


LOADING - 2            SETTLEMENT OF JT. 5                                                STATUS - ACTIVE

MEMBER AND ELEMENT LOADS-------------------------------------------------------------------------------------------/
MEMBER/ELEMENT

JOINT LOADS-----------------------------------------/ ------------------------------------/
JOINT     STEP   FORCE X          Y          Z      MOMENT X          Y          Z

JOINT DISPLACEMENTS---------------------------------/ ------------------------------------/
JOINT     STEP   DISP. X          Y          Z      ROT.   X          Y          Z
5                -0.30000    -0.50000     0.0          0.0        0.0        0.01000

JOINT FORCE ASSUMPTIONS ---------------------------------------------------------------------------------------------/

JOINT     THETA  1        2        3     FORCE X          Y          Z      MOMENT X          Y          Z
NO ASSUMPTIONS GIVEN FOR THIS LOADING


MEMBER FORCE ASSUMPTIONS ---------------------/    ---------------------------------/

MEMBER       COMPONENT   DISTANCE     VALUE         COMPONENT   DISTANCE     VALUE
NO ASSUMPTIONS GIVEN FOR THIS LOADING

****************************************
*  END OF DATA FROM  INTERNAL STORAGE  *
****************************************
```

STIFFNESS ANALYSIS	$ 14T 62	0380
OUTPUT DECIMAL 3	$ 14T 62	0381
UNITS FEET	$ 14T 62	0382
LIST FORCES REACTIONS DISPLACEMENTS	$ 14T 62	0390

```
****************************
*RESULTS OF LATEST ANALYSES*
****************************

PROBLEM - PROB 3.7  TITLE - TAPERED COLUMN

ACTIVE UNITS  FEET KIP  RAD  DEGF SEC

ACTIVE STRUCTURE TYPE  PLANE   FRAME

ACTIVE COORDINATE AXES  X Y
```

LOADING - 1 ALL LOADS SHOWN

MEMBER FORCES

MEMBER	JOINT	FORCE AXIAL	FORCE SHEAR Y	FORCE SHEAR Z	MOMENT TORSIONAL	MOMENT BENDING Y	MOMENT BENDING Z
1	1	-0.000	0.000				-0.000
	2	0.000	56.000				-784.000
4	3	160.825	-0.000				0.000
2	2	-169.310	8.485				-72.002
3	2	125.721	57.720				956.002
3	4	-137.721	18.279				-364.397
4	5	9.312	137.721				509.784
4	4	-9.312	-137.721				743.463
5	4	-0.000	-8.967				-399.476
5	6	0.000	40.967				-0.000

RESULTANT JOINT LOADS - SUPPORTS

JOINT	FORCE X FORCE	FORCE Y FORCE	FORCE Z FORCE	MOMENT X MOMENT	MOMENT Y MOMENT	MOMENT Z MOMENT
3	113.721	113.720				0.000
5	-137.721	9.312				509.784
6	0.000	40.967				-0.000

RESULTANT JOINT DISPLACEMENTS - SUPPORTS

JOINT	DISPLACEMENT X DISP.	DISPLACEMENT Y DISP.	DISPLACEMENT Z DISP.	ROTATION X ROT.	ROTATION Y ROT.	ROTATION Z ROT.
3	0.220	-0.220				0.012
5	0.0	0.0				0.0
6	0.076	0.0				0.002

RESULTANT JOINT DISPLACEMENTS - FREE JOINTS

JOINT	DISPLACEMENT X DISP.	DISPLACEMENT Y DISP.	DISPLACEMENT Z DISP.	ROTATION X ROT.	ROTATION Y ROT.	ROTATION Z ROT.
1	0.078	-0.575				0.030
2	0.078	-0.081				0.011
4	0.076	-0.000				-0.003

LOADING - 2 SETTLEMENT OF JT. 5

MEMBER FORCES

MEMBER	JOINT	FORCE AXIAL	FORCE SHEAR Y	FORCE SHEAR Z	MOMENT TORSIONAL	MOMENT BENDING Y	MOMENT BENDING Z
1	1	0.000	-0.000				0.000
1	2	-0.000	0.000				-0.000
2	3	20.390	-0.000				0.000
2	2	-20.390	0.000				-0.000
3	2	14.418	14.418				0.000
3	4	-14.418	-14.418				432.531
4	5	-30.824	14.418				343.044
4	4	30.824	-14.418				-170.033
5	4	0.000	-16.406				-262.497
5	6	-0.000	16.406				-0.000

RESULTANT JOINT LOADS - SUPPORTS

JOINT	FORCE X FORCE	FORCE Y FORCE	FORCE Z FORCE	MOMENT X MOMENT	MOMENT Y MOMENT	MOMENT Z MOMENT
3	14.418	14.418				0.000
5	-14.418	-30.824				343.044
6	-0.000	16.406				-0.000

RESULTANT JOINT DISPLACEMENTS - SUPPORTS

JOINT	DISPLACEMENT X DISP.	DISPLACEMENT Y DISP.	DISPLACEMENT Z DISP.	ROTATION X ROT.	ROTATION Y ROT.	ROTATION Z ROT.
3	-0.165	0.165				-0.007
5	-0.025	-0.042				0.010
6	-0.084	0.0				0.003

RESULTANT JOINT DISPLACEMENTS - FREE JOINTS

JOINT	DISPLACEMENT X DISP.	DISPLACEMENT Y DISP.	DISPLACEMENT Z DISP.	ROTATION X ROT.	ROTATION Y ROT.	ROTATION Z ROT.
1	-0.084	0.272				-0.007
2	-0.084	0.084				-0.007
4	-0.084	-0.041				0.001

To obtain the analysis considering support widths, the following coding is added.

```
MEMBER END JOINT SIZE                                  400
       1 END 1.77                                      410
       3 START 1.77 END 1.0                            420
       5 START 1.0                                     430
LOAD LIST 1                                            440
STIFFNESS ANALYSIS                                     450
LIST FORCES REACTIONS DISPLACEMENTS                    460
```

Note that only load one will be considered in the analysis and that another stiffness analysis is required to make the results available. The following computer output is the result of the commands shown on lines 400 to 460.

```
MEMBER END JOINT SIZE                                   $ 14T 62    0400
     1 END 1.77                                         $ 14T 62    0410
     3 START 1.77 END 1.0                               $ 14T 62    0420
     5 START 1.0                                        $ 14T 62    0430
LOAD LIST 1                                             $ 14T 62    0440
STIFFNESS ANALYSIS                                      $ 14T 62    0450
LIST FORCES REACTIONS DISPLACEMENTS                     $ 14T 62    0460
```

```
****************************
*RESULTS OF LATEST ANALYSES*
****************************
```

PROBLEM - PROB 3.7 TITLE - TAPERED COLUMN

ACTIVE UNITS FEET KIP RAD DEGF SEC

ACTIVE STRUCTURE TYPE PLANE FRAME

ACTIVE COORDINATE AXES X Y

LOADING - 1 ALL LOADS SHOWN

MEMBER FORCES

MEMBER	JOINT	FORCE: AXIAL	FORCE: SHEAR Y	FORCE: SHEAR Z	MOMENT: TORSIONAL	MOMENT: BENDING Y	MOMENT: BENDING Z
1	1	-0.000	0.000				0.000
1	2	0.000	56.000				-784.000
2	2	160.558	-0.000				0.000
2	2	-169.443	8.485				-72.002
3	2	125.814	57.814				854.002
3	4	-137.814	18.186				-341.575
4	5	8.339	137.814				898.649
4	4	-8.339	-137.814				755.123
5	4	-0.000	-9.847				-413.547
5	6	0.000	41.847				-0.000

RESULTANT JOINT LOADS - SUPPORTS

JOINT	FORCE: X FORCE	FORCE: Y FORCE	FORCE: Z FORCE	MOMENT: X MOMENT	MOMENT: Y MOMENT	MOMENT: Z MOMENT
3	113.814	113.814				0.000
5	-137.814	8.339				899.650
6	0.000	41.847				-0.000

RESULTANT JOINT DISPLACEMENTS - SUPPORTS

JOINT	DISPLACEMENT: X DISP.	DISPLACEMENT: Y DISP.	DISPLACEMENT: Z DISP.	ROTATION: X ROT.	ROTATION: Y ROT.	ROTATION: Z ROT.
3	0.201	-0.201				0.011
5	0.0	0.0				0.0
6	0.074	0.0				0.002

RESULTANT JOINT DISPLACEMENTS - FREE JOINTS

JOINT	DISPLACEMENT: X DISP.	DISPLACEMENT: Y DISP.	DISPLACEMENT: Z DISP.	ROTATION: X ROT.	ROTATION: Y ROT.	ROTATION: Z ROT.
1	0.076	-0.490				0.017
2	0.076	-0.079				0.010
4	0.074	-0.000				-0.003

Table 3.7a – COMPARISON OF MEMBER END RESULTS

JOINT SIZE CONSIDERED

LOADING - 1 ALL LOADS SHOWN

MEMBER FORCES

MEMBER	JOINT	FORCE AXIAL	FORCE SHEAR Y	FORCE SHEAR Z	MOMENT TORSIONAL	MOMENT BENDING Y	MOMENT BENDING Z
1	1	-0.000	0.000				-0.000
	2	0.000	56.000				-784.000
4	3	160.825	-0.000				0.000
2	2	-169.210	8.485				-72.002
3	2	125.721	57.720				954.002
3	4	-137.721	18.279				-344.387
4	5	9.312	137.721				509.784
4	4	-9.312	-137.721				743.943
5	4	-0.000	-8.967				-399.476
5	6	0.000	40.967				-0.000

JOINT SIZE NOT CONSIDERED

LOADING - 1 ALL LOADS SHOWN

MEMBER FORCES

MEMBER	JOINT	FORCE AXIAL	FORCE SHEAR Y	FORCE SHEAR Z	MOMENT TORSIONAL	MOMENT BENDING Y	MOMENT BENDING Z
1	1	-0.000	0.000				0.000
1	2	0.000	56.000				-784.000
2	3	160.958	-0.000				0.000
2	2	-169.443	8.485				-72.002
3	2	125.814	57.814				954.002
3	4	-137.814	18.186				-341.575
4	5	8.339	137.814				899.649
4	4	-8.339	-137.814				745.123
5	4	-0.000	-6.947				-413.547
5	6	0.000	41.947				-0.000

At the conclusion of the analysis a plot of the geometry of the structure is helpful, particularly in complex structures with many members, in determining errors of input. To obtain the geometry of a two dimensional structure, use the command 'PLOT PLANE'. This command will provide a scaled printer plot of the structure as described in the previous STRUDL commands. The joints are labeled on the plots and the member incidences are printed in a convenient table near the plot. To rotate the plot 90° the command 'PLOT FORMAT ORIENTATION NON STANDARD' may be given. Following this command another plot plane will verify that the rotation has taken place. Notice that the plot has been rescaled to fit the width of the paper.

To obtain member moment and shear diagrams the 'PLOT DIAGRAM' command is used. For example to obtain the moment and shear diagrams for member 3 considering all loading conditions, the following commands may be used.

```
LOAD LIST ALL

PLOT DIAGRAM FORCE Y MOMENT Z MEMBER 3
```

The first command instructs STRUDL to make available all of the loading conditions that have been described. The second command asks for shear and moment diagrams for Member 3. These commands will initiate the plotting of the diagrams in the following order.

Member 3	Force Y	Loading 1
Member 3	Moment Z	Loading 1
Member 3	Force Y	Loading 2
Member 3	Moment Z	Loading 2

Envelope curves for all loadings on Member 3 may be obtained with the following command 'PLOT ENVELOPE FORCE Y MOMENT Z MEMBER 3'. This command is sufficient to generate envelope curves for moment, shear forces in Member 3.

The commands described may be expanded to include all members that are of interest by listing the desired members. Care must be exercised when coding plot commands to insure that unwanted plots are not produced. For example, a command, 'PLOT DIAGRAM ALL MEMBERS', for a space frame of 10 members combined with 10 separate loading would give 600 plots.

The following set of commands and computer output illustrates the results that may be expected from the plotting commands just described.

```
PLOT PLANE                                                    470
PLOT FORMAT ORIENTATION NON STANDARD                          480
PLOT PLANE                                                    490
LOAD LIST ALL                                                 500
PLOT DIAGRAM FORCE Y MOMENT Z MEMBER 3                        510
PLOT ENVELOPE FORCE Y MOMENT Z MEMBER 3                       520
```

PLANE IDENTIFIED BY - PLANE Z EQUALS 0.0

IN PLANE JOINTS

JOINT	COORDINATES X	Y	Z
1	0.0	12.0000	0.0
2	28.0000	12.0000	0.0
3	16.0000	0.0	0.0
4	58.0000	12.0000	0.0
5	58.0000	0.0	0.0
6	74.0000	12.0000	0.0

IN PLANE MEMBERS

MEMBER INCIDENCES

MEMBER	START	END
1	1	2
2	3	2
3	2	4
4	5	4
5	4	6

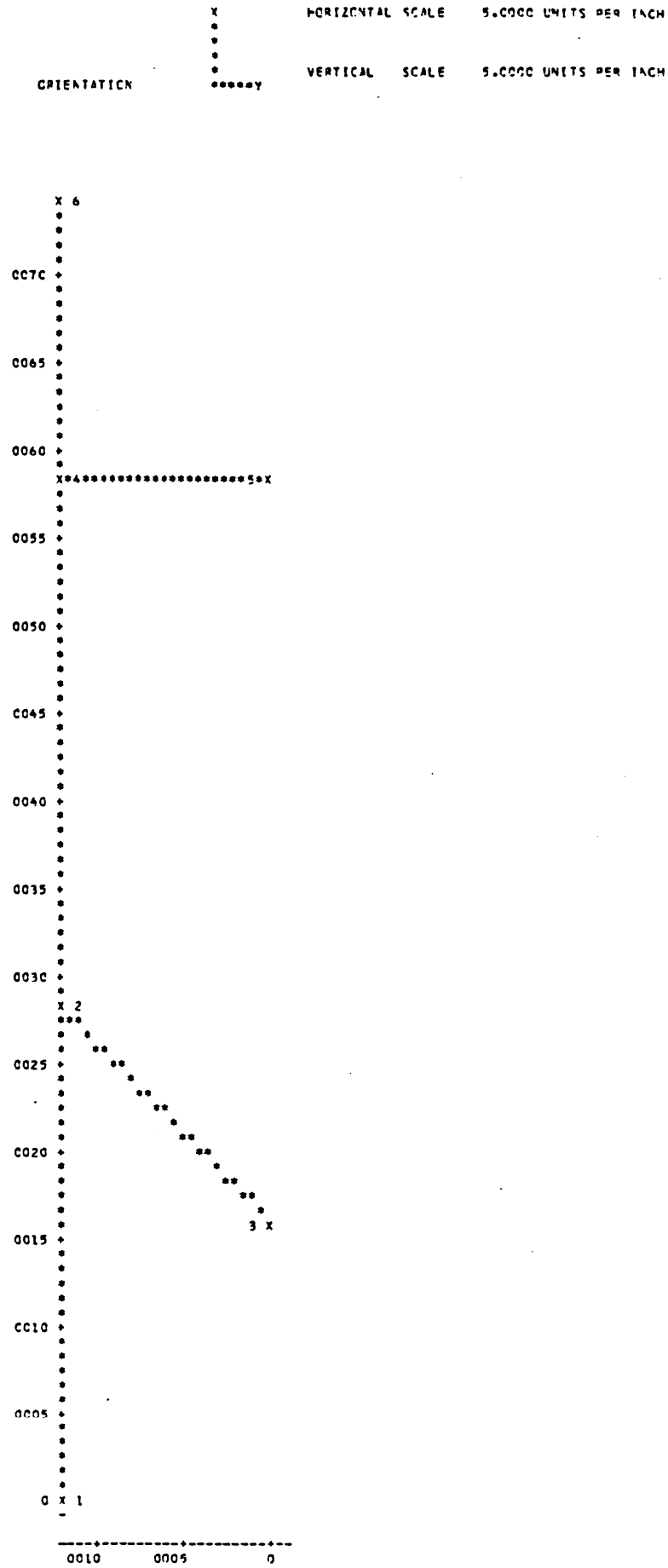
HORIZONTAL SCALE 5.0000 UNITS PER INCH
VERTICAL SCALE 5.0000 UNITS PER INCH
ORIENTATION
0070
0065
0060
0055
0050
0045
0040
0035
0030
0025
0020
0015
0010
0005
0
0010
0005
0

PLCT FCRMAT ORIENTATION NON STANDARD $ 14T 62 0480

PLCT PLANE $ 14T 62 0490

PLANE IDENTIFIEC BY - PLANE Z EQUALS 0.0

IN PLANE JCINTS

JOINT	COCRDINATES X	Y	Z
1	C.0	12.0CC0	0.C
2	28.CCC0	12.0CC0	C.C
3	16.CCC0	0.C	0.0
4	58.CCC0	12.CCCC	C.C
5	58.CCC0	C.C	0.0
6	74.CCCC	12.CCC0	0.C

IN PLANE MEMBERS
MEMBER INCICENCES

MEMBER	START	END
1	1	2
2	3	2
3	2	4
4	5	4
5	4	6

ORIENTATICN

Y
*
*
*
*
*****X

HORIZONTAL SCALE 1C.C00C UNITS PER INCH

VERTICAL SCALE 1C.C00C UNITS PER INCH

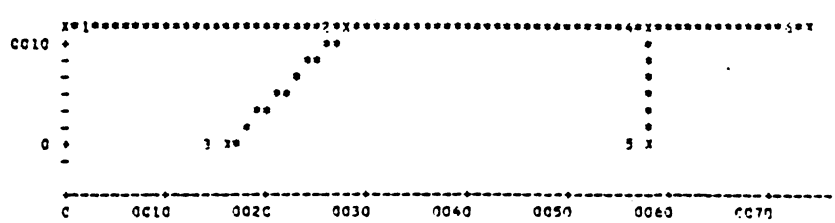

LCAC LIST ALL $ 14T 62 0500

PLCT DIAGRAM FORCE Y MCMENT Z MEMBER 3 $ 14T 62 0510

PLCT 1 MEMBER 3 FORCE Y DIAGRAM LCAD 1

SECTION	DISTANCE VECTCR	FORCE Y
1	C.C	-57.8142
2	1.5CCC	-54.8142
3	3.CCCC	-51.8142
4	4.5CCC	-48.8142
5	6.CCCC	-45.8142
6	7.5CCC	-42.8142
7	9.CCCC	-39.8143
8	1C.5CCC	-20.8143
9	12.CCCC	-17.8143
10	13.5CCC	-14.8143
11	15.CCCC	-11.8143
12	16.5CCC	-8.8143
13	18.CCCC	-5.8143
14	19.5CCC	-2.8143
15	21.CCCC	C.1857
16	22.5CCC	3.1857
17	24.CCCC	6.1857
18	25.5CCC	9.1857
19	27.CCCC	12.1857
20	28.5CCC	15.1856
21	3C.0CCC	18.1856

PLCT 2 MEMBER 3 MOMENT Z DIAGRAM LCAD 1

SECTION	DISTANCE VECTCR	MOMENT Z
1	0.C	-856.CC34
2	1.5C0C	-771.532C
3	3.CCCC	-691.5605
4	4.5C0C	-616.0891
5	6.CCCC	-545.1177
6	7.5CCC	-478.6465
7	9.CCCC	-416.6753
8	1C.5CCC	-367.2036
9	12.CCCC	-328.2322
10	13.5CCC	-313.7610
11	15.CCCC	-293.7896
12	16.5C0C	-278.3181
13	18.CCCC	-267.3467
14	19.5CCC	-260.8752
15	21.CCCC	-258.5038
16	22.5CCC	-261.4324
17	24.CC0C	-268.46C7
18	25.5CCC	-279.9893
19	27.CCCC	-296.C176
20	28.5CCC	-316.5461
21	3C.0CCC	-341.5747

RLCT 3 MEMBER 3 FORCE Y DIAGRAM LCAD 2

SECTION	DISTANCE VECTOR	FORCE Y
1	0.C	-14.4177
2	1.5CCC	-14.4177
3	3.CCCC	-14.4177
4	4.5CCC	-14.4177
5	6.CC0C	-14.4177
6	7.5CCC	-14.4177
7	9.CCCC	-14.4177
8	1C.5CCC	-14.4177
9	12.0CCC	-14.4177
10	13.5C0C	-14.4177
11	15.CCCC	-14.4177
12	16.5C0C	-14.4177
13	18.CCCC	-14.4177
14	19.5CCC	-14.4177
15	21.CCCC	-14.4177
16	22.5CCC	-14.4177
17	24.CC0C	-14.4177
18	25.5C0C	-14.4177
19	27.CCCC	-14.4177
20	28.5CCC	-14.4177
21	30.CCCC	-14.4177

PLCT 4 MEMBER 3 MOMENT Z DIAGRAM LCAD 2

SECTICN	DISTANCE VECTCR	MOMENT Z
1	C.C	-C.CCC3
2	1.5C0C	21.6262
3	3.CC0C	43.2528
4	4.5C0C	64.8794
5	6.CCCC	86.5C59
6	7.5CCC	1C8.1325
7	9.CC0C	129.7589
8	1C.5CCC	151.3855
9	12.CCC0	173.0120
10	13.5CCC	194.6386
11	15.CCCC	216.2651
12	16.5CCC	227.8917
13	18.CCCC	259.5181
14	19.5CCC	281.1445
15	21.CCCC	3C2.7712
16	22.5CCC	324.3977
17	24.CCCC	346.0244
18	25.5CCC	367.65C6
19	27.CCCC	389.2771
20	28.5CCC	41C.9038
21	3C.CCCC	432.53C3

MEMBER 3 HORIZONTAL SCALE 10.0000 UNITS PER INCH

FORCE Y LCAD 1 VERTICAL SCALE 10.0000 UNITS PER INCH

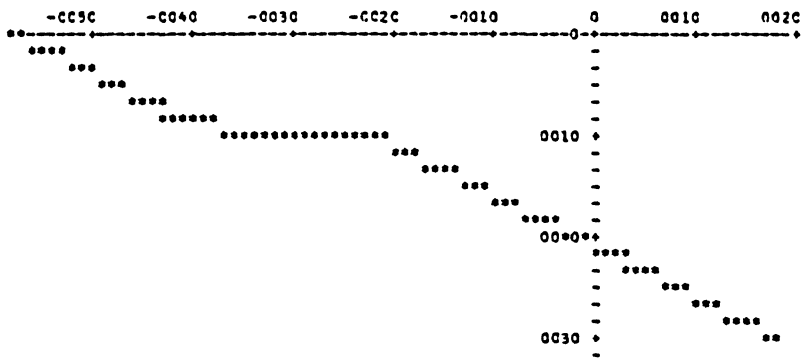

MEMBER 3 HORIZONTAL SCALE 200.0000 UNITS PER INCH

MOMENT Z LCAD 1 VERTICAL SCALE 10.0000 UNITS PER INCH

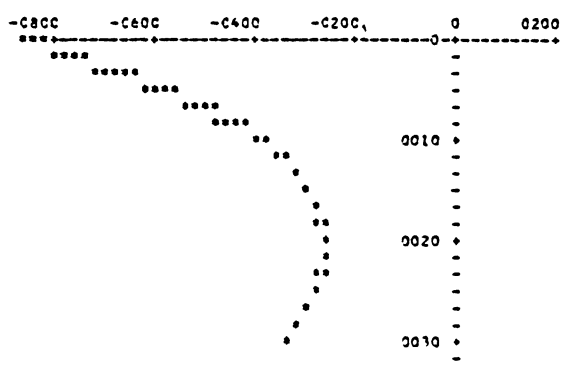

MEMBER 3 HORIZONTAL SCALE 10.0000 UNITS PER INCH

FORCE Y LCAD 2 VERTICAL SCALE 10.0000 UNITS PER INCH

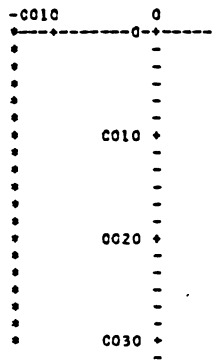

MEMBER 3 HORIZONTAL SCALE 200.0000 UNITS PER INCH

MOMENT Z LCAD 2 VERTICAL SCALE 10.0000 UNITS PER INCH

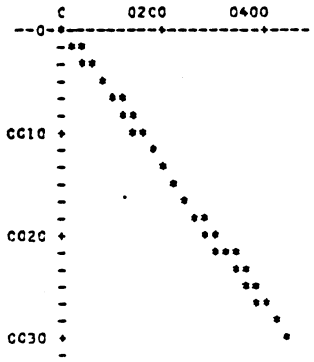

PLCT 1 MEMBER 3 FORCE Y ENVELOPE

SECTION	DISTANCE VECTOR	FORCE Y MAXIMUM	MINIMUM
1	C.C	-14.4177	-57.8142
2	1.5CCC	-14.4177	-54.8142
3	3.CCCC	-14.4177	-51.8142
4	4.5CCC	-14.4177	-48.8142
5	6.CCCC	-14.4177	-45.8142
6	7.5CCC	-14.4177	-42.8142
7	9.CCCC	-14.4177	-39.8143
8	1C.5CCC	-14.4177	-20.8143
9	12.CCCC	-14.4177	-17.8143
10	13.5CCC	-14.4177	-14.8143
11	15.CCCC	-11.8143	-14.4177
12	16.5CCC	-8.8143	-14.4177
13	18.CCCC	-5.8143	-14.4177
14	19.5CCC	-2.8143	-14.4177
15	21.CCCC	0.1857	-14.4177
16	22.5CCC	3.1857	-14.4177
17	24.CCCC	6.1857	-14.4177
18	25.5CCC	9.1857	-14.4177
19	27.CCCC	12.1857	-14.4177
20	28.5CCC	15.1856	-14.4177
21	3C.CCCC	18.1856	-14.4177

PLCT 2 MEMBER 3 MOMENT Z ENVELCPE

SECTION	DISTANCE VECTOR	MOMENT Z MAXIMUM	MINIMUM
1	C.C	-C.0003	-856.CC34
2	1.5CCC	21.6262	-771.5320
3	3.CCCC	43.2528	-691.5605
4	4.5CCC	64.8794	-616.C891
5	6.CCCC	86.5C55	-545.1177
6	7.5CCC	1C8.1325	-478.6465
7	9.CCCC	129.7589	-416.8753
8	1C.5CCC	151.3855	-367.2C36
9	12.CCCC	173.0120	-338.2322
10	13.5CCC	194.6386	-313.761C
11	15.CCCC	216.2651	-293.7896
12	16.5CCC	237.8917	-278.3181
13	18.CCCC	259.5181	-267.3467
14	19.5CCC	281.1445	-26C.8752
15	21.CCCC	3C2.7712	-258.9C38
16	22.5CCC	324.3977	-261.4324
17	24.CCCC	346.C244	-268.46C7
18	25.5CCC	367.65C6	-279.9893
19	27.CCCC	389.2771	-296.C176
20	28.5CCC	41C.9C39	-316.5461
21	3C.CCCC	432.53C3	-341.5747

MEMBER 3 HORIZONTAL SCALE 10.0000 UNITS PER INCH

LOAD FORCE Y VERTICAL SCALE 10.0000 UNITS PER INCH

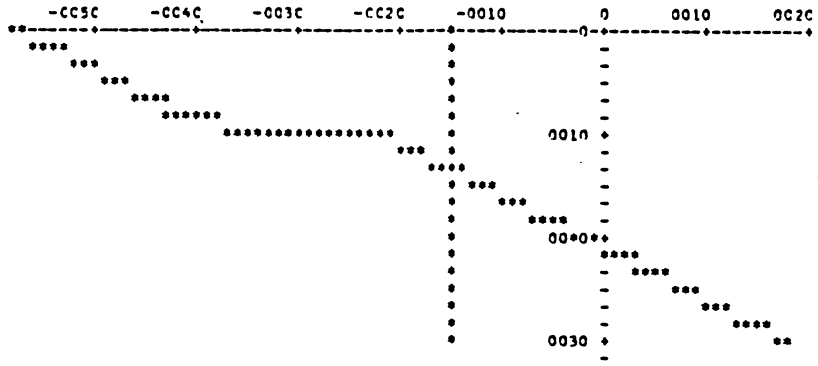

MEMBER 3 HORIZONTAL SCALE 200.0000 UNITS PER INCH

LOAD MOMENT Z VERTICAL SCALE 10.0000 UNITS PER INCH

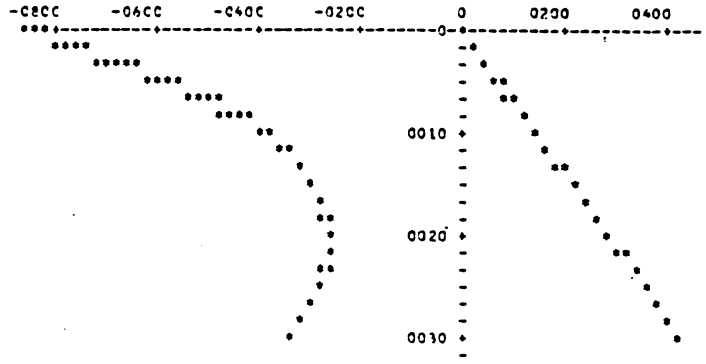

3.8 Plane Frame With Nonsymmetrical Member Cross Section

To illustrate three additional STRUDL commands consider the Plane Frame Structure and loading conditions shown in Figure 3.8a thru 3.8d below. These commands are concerned with:

(1) Joint Fixity

(2) Temperature load - axial and bending

(3) Internal member stresses for a nonsymmetrical section.

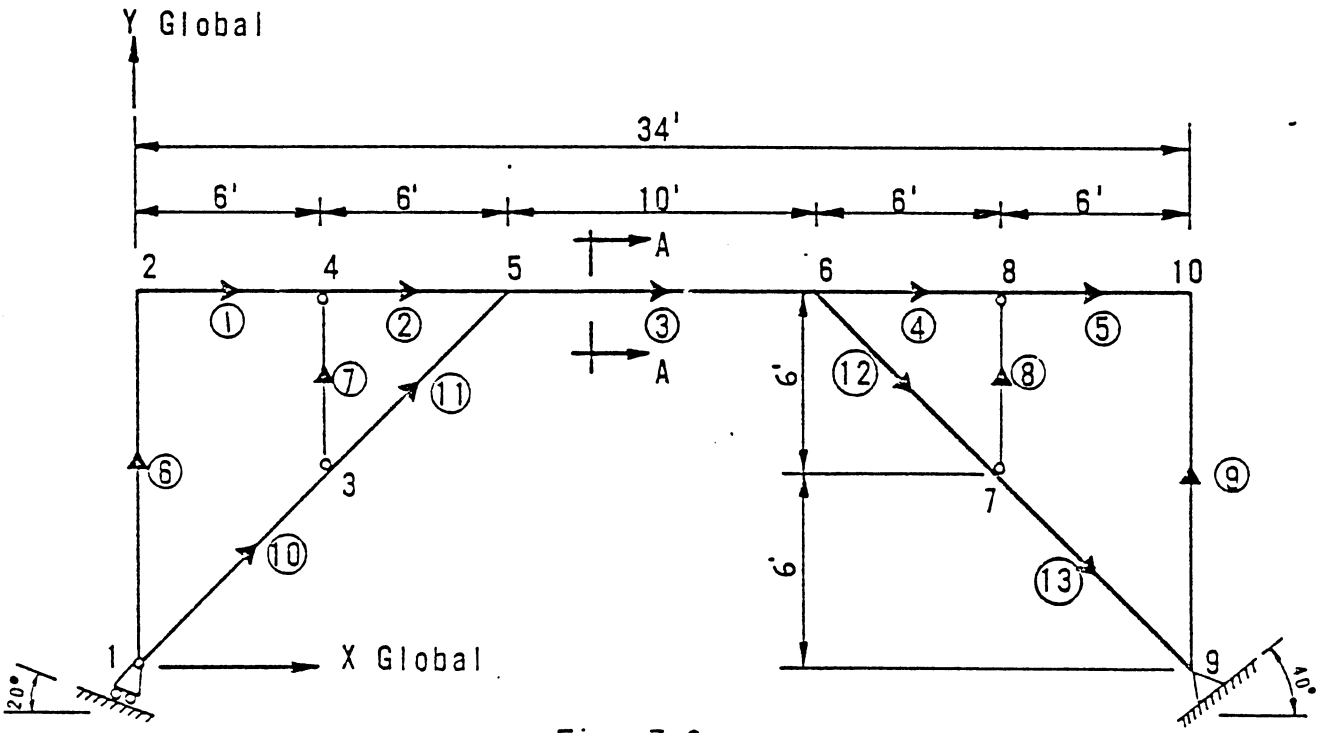

Fig. 3.8a

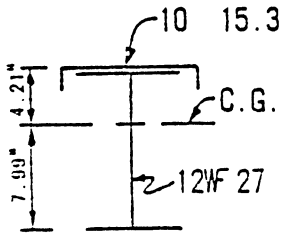

SECTION A-A

SECTION PROPERTIES
MEMBERS 1-5

A_x = 12.44 □"
I_z = 295.6 in^4
E = 29.000 ksi
S_z (TOP) = 70.1 in^3
S_z (BOT) = 37.0 in^3

SECTION PROPERTIES
MEMBERS 6-13

12WF 27

A_x = 7.97 □"
I_z = 204.1 in^4
S_z = 34.1 in^3

Fig. 3.8b

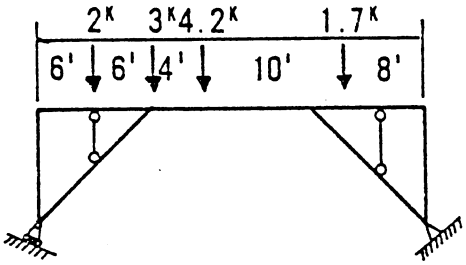

LOADING 1

Fig. 3.8c

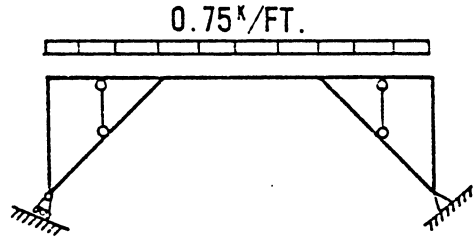

LOADING 2

Fig. 3.8d

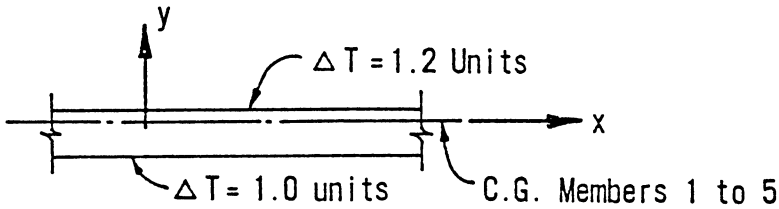

LOADING 3
Fig. 3.8e

LOADING 3: Members 6 to 13 subjected to uniform temperature change of 1.0 units.

LOADING 4: Combine 60% of LOADING ONE and 125% of LOADING TWO.

LOADING 5: Combine LOADING THREE and LOADING FOUR.

Using the global coordinate system and the dimensions shown in Figure 3.8a, the commands through line 0140 call the STRUDL subsystem and describe the structure geometry.

Using the global coordinate system and the dimensions shown in Figure 3.8a, the commands through line 0140 call the STRUDL subsystem and describe the structure geometry.

STATE OF CALIFORNIA - BUSINESS AND TRANSPORTATION AGENCY - DEPARTMENT OF PUBLIC WORKS - DIVISION OF ADMINISTRATIVE SERVICES

COMPUTER SYSTEMS

ICES

SUBSYSTEM NAME	SEQUENCE
STRUDL 'PROB 3.8' 'PLANE FRAME'	0001
TYPE PLANE FRAME	20
UNITS FEET DEGREES	30
JOINT COORDINATES	40
1 X 0. Y 0. SUPPORT	50
2 X 0. Y 12.	60
3 X 6. Y 6.	70
4 X 6. Y 12.	80
5 X 12. Y 12.	90
6 X 22. Y 12.	100
7 X 28. Y 6.	110
8 X 28. Y 12.	120
9 X 34. Y 0. SUPPORT	130
10 X 34. Y 12.	140
JOINT RELEASES	150
1 FORCES X THI 160	160
9 MOMENT Z	170

The commands on lines 0150 thru 0170 describe the fixity at the support joints. Figure 3.8f below illustrates the details of joint 1.

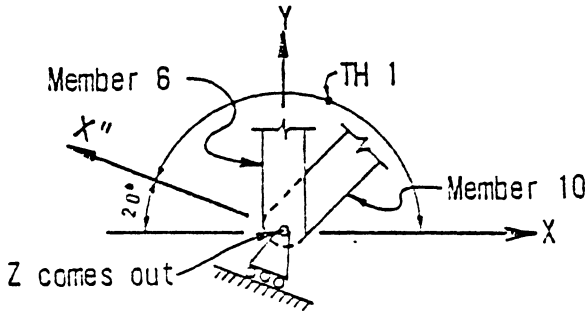

Fig. 3.8f

In order to release joint 1 and allow it to translate along the inclined plane, a THETA angle must be specified. Here we use TH1 to specify the orientation of the release direction, X", with respect to the global X axis. The positive direction for TH1 is determined by applying the right-hand rule to the global Z axis. In this case the positive direction is counterclockwise. If we turn the angle counterclockwise from the global X axis, the value of TH1 is 180-20=160 degrees.

Figure 3.8g illustrates the details at joint 9.

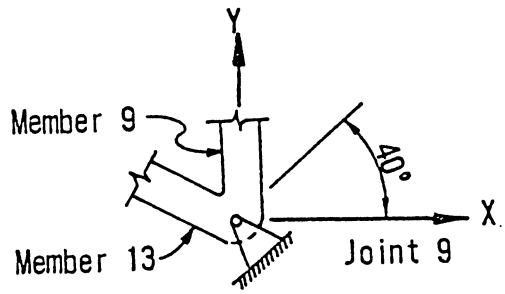

Fig. 3.8g

Although joint 9 is located on an inclined plane, a THETA angle is not required because the joint is released for Moment Z only and no translation is allowed.

The member topology is described on lines 0180 thru 0310 orienting the local X axes of the members as shown in Figure 3.8a.

```
MEMBER INCIDENCES                                          180
    1 2 4                                                  190
    2 4 5                                                  200
    3 5 6                                                  210
    4 6 8                                                  220
    5 8 10                                                 230
    6 1 2                                                  240
    7 3 4                                                  250
    8 7 8                                                  260
    9 9 10                                                 270
    10 1 3                                                 280
    11 3 5                                                 290
    12 6 7                                                 300
    13 7 9                                                 310
MEMBER RELEASES                                            320
    7 8 START MOMENT Z END MOMENT Z                        322
    6 10 START MOMENT Z                                    325
```

Lines 0320 and 0325 describe the fixity at the ends of the members. Members 7 and 8 are pinned at both ends; therefore, we release Moment Z at start and end. In order to obtain the fixity of joint 1, shown in Figure 3.8f, we release moment Z at the start of members 6 and 10. These members are now free to rotate at joint 1; therefore, the joint will resist no moment and it is also free to translate along the inclined plane. In addition to the way we released the moment at this joint, there is another way we could effectively accomplish the same thing. Using the joint release command, we would release moment Z as well as force X. Then using the member release command, we release the start of only one member at the joint. Following is a list of release commands that would be used for releasing the joint in this manner:

```
JOINT RELEASES MOMENT Z

     1  FORCE X TH1 160
     9

MEMBER RELEASES

     7  8 START MOMENT Z END MOMENT Z
     6  START MOMENT Z
```

Since there are only two members framing into the joint releasing one member as well as the joint in effect releases the other member. When a member is released, a hinge is formed an infinitesimal distance from the joint; therefore, if we were to release both members as well as the joint, we would create an unstable condition.

```
UNITS INCHES KIPS                                          330
MEMBER PROPERTIES PRISMATIC                                340
     1 TO 5 AX 12.44 IZ 295.6 SZ 70.1                      342
     6 TO 13 AX 7.97 IZ 204.1 SZ 34.1                      344
```

Note that for members 1 to 5 the section modulus given is for the top fibers of the composite beam. The internal member stresses obtained initially will be for the top fibers only.

Since members 6 to 13 are symmetrical about their centroid, the section modulus given is for both top and bottom fibers.

```
MEMBER DEPTHS PRISMATIC                                    346
     1 TO 5 YD 12.20 YC 4.21                               347
     6 TO 13 YD 11.96 YC 5.98                              348
```

Since we have a linearly varying temperature load, the member depths must be given. YD is the total depth of the member measured along a line parallel to the local Y axis. YC is the distance from the centroid of the cross section to the extreme fiber of the member measured in the positive direction along a line parallel to local Y axis.

```
CONSTANTS E 29000. ALL                                    350
CTE .00039 ALL                                            352
```

The coefficient of thermal expansion is necessary for solution of temperature loadings. The value shown was taken from the BP&D Manual, Vol. I, and applies to a steel structure with a temperature rise and fall of 60 degrees; therefore, it is actually the coefficient of thermal expansion multiplied by 60. If the actual coefficient were given the AXIAL value given in lines 472 and 474 would be 68 and 60 respectively.

Notice the dash used in the command on line 482 to continue the statement onto line 484. Note that continued lines must also be numbered and also that the dash is preceded and followed by a blank space.

```
UNITS FEET                                                360
LOADING 'ONE'                                             370
      JOINT LOADINGS                                      380
        4 FORCE Y -2.                                     390
        5 FORCE Y -3.                                     400
      MEMBER LOADINGS FORCE Y                             410
3 CONCENTRATED P -4.2 L 4.0                               420
4 CONCENTRATED P -1.7 L 4.0                               430
LOADING 'TWO'                                             440
      MEMBERS 1 TO 5 LOAD FORCE Y GLOBAL UNIFORM -.75     450
LOADING 'THREE' 'TEMPERATURE CHANGE'                      460
      MEMBER TEMPERATURE LOADS                            462
1 TO 5 FRACTIONAL LA 0.0 LB 1.0 AXIAL 1.13 BENDING Z 0.2  472
6 TO 13 FRACTIONAL LA 0.0 LB 1.0 AXIAL 1.0                474
LOADING COMBINATION 'FOUR' COMBINE 'ONE' .6 'TWO' 1.25    480
LOADING COMBINATION 'FIVE' COMBINE 'ONE' .6 'TWO' 1.25 -  482
'THREE' 1.                                                484
```

The loads shown in Figures 3.8b and 3.8c are described in Loadings 'ONE' and 'TWO' respectively. In Loading THREE we use the Temperature Load commands to apply loads shown in Figure 3.8e.

The temperature loading on this structure is similar to that which might be expected to occur if the top flange of the horizontal members were subjected to more direct sun than the rest of the structure. The top surface of members 1 to 5 are subjected to a temperature increase of 1.2 units while the lower surface is subjected

to an increase of only 1.0 units; therefore, there is a temperature gradient in the local Y direction of 0.2 units which causes bending about the Z axis. This gradient is expressed in the TEMPERATURE Load command as BENDING Z in line 0472. The average temperature change is 1.13 units due to the fact the members are unsymmetrical. Members 6 to 13 are subjected to a uniform temperature increase of 1.0 units.

```
LOADING LIST ALL                                   490
UNITS INCHES                                       500
PRINT DATA                                         510
STIFFNESS ANALYSIS                                 520
UNITS RADIANS                                      530
OUTPUT DECIMAL 4                                   540
LIST FORCES REACTIONS DISPLACEMENTS                550
SECTION FRACTIONAL DS .0 .2                        551
LIST SECTION STRESSES MEMBER 3                     552
```

Line 0551 is the Section Specifications Command and must either precede the Internal Member Results Command (Line 0552) or be part of it. By listing the section specifications separately, it does not have to be repeated each time an Internal Member Results Command is made. This statement sets the sections at which results are desired as beginning at the start of the member and at each 0.2L interval along the member. Results obtained by this output statement are valid for top fiber only since the section modulus stated previously applies to the top fiber.

```
CHANGES                                            560
MEMBERS 1 TO 5 PROPERTIES PRISMATIC SZ 37.0        570
LIST SECTION STRESSES MEMBER 3                     600
```

After going into the CHANGES mode and replacing the section modulus for the top fiber by the one corresponding to the bottom fiber, we restate the Internal Member Results Command (Line 0600) to obtain bottom fiber stresses.

```
STRUDL 'PROB 3.8' 'PLANE FRAME'                                  $ 14T 63    0001

          ************************************************
          *                                              *
          *     ICES STRUDL II      VERSION 1 MOD 1      *
          *       THE STRUCTURAL DESIGN LANGUAGE         *
          *    MASSACHUSETTS INSTITUTE OF TECHNOLOGY     *
          *             STATE OF CALIFORNIA              *
          *     BRIDGE DEPARTMENT DIVISION OF HWYS.      *
          *    SPECIAL STUDIES SECTION  PH. 445-6519     *
          *     NOVEMBER 1969  INSTALLED APRIL 1970      *
          *           17:15:41        6/26/70            *
          *                                              *
          ************************************************

TYPE PLANE FRAME                                                 $ 14T 63    0020

UNITS FEET DEGREES                                               $ 14T 63    0030

JOINT COORDINATES                                                $ 14T 63    0040

     1 X 0. Y 0. SUPPORT                                         $ 14T 63    0050

     2 X 0. Y 12.                                                $ 14T 63    0060

     3 X 6. Y 6.                                                 $ 14T 63    0070

     4 X 6. Y 12.                                                $ 14T 63    0080

     5 X 12. Y 12.                                               $ 14T 63    0090

     6 X 22. Y 12.                                               $ 14T 63    0100

     7 X 28. Y 6.                                                $ 14T 63    0110

     8 X 28. Y 12.                                               $ 14T 63    0120

     9 X 34. Y 0. SUPPORT                                        $ 14T 63    0130

     10 X 34. Y 12.                                              $ 14T 63    0140

JOINT RELEASES                                                   $ 14T 63    0150

     1 FORCE X TH1 160                                           $ 14T 63    0160

     9 MOMENT Z                                                  $ 14T 63    0170

MEMBER INCIDENCES                                                $ 14T 63    0180

     1 2 4                                                       $ 14T 63    0190

     2 4 5                                                       $ 14T 63    0200

     3 5 6                                                       $ 14T 63    0210

     4 6 8                                                       $ 14T 63    0220

     5 8 10                                                      $ 14T 63    0230

     6 1 2                                                       $ 14T 63    0240

     7 3 4                                                       $ 14T 63    0250

     8 7 8                                                       $ 14T 63    0260

     9 9 10                                                      $ 14T 63    0270

     10 1 3                                                      $ 14T 63    0280

     11 3 5                                                      $ 14T 63    0290

     12 6 7                                                      $ 14T 63    0300

     13 7 9                                                      $ 14T 63    0310
```

```
MEMBER RELEASES                                          $ 14T 63   0320
     7 8 START MOMENT Z END MOMENT Z                     $ 14T 63   0322
     6 10 START MOMENT Z                                 $ 14T 63   0325
UNITS INCHES KIPS                                        $ 14T 63   0330
MEMBER PROPERTIES PRISMATIC                              $ 14T 63   0340
     1 TO 5 AX 12.44 IZ 295.6 SZ 70.1                    $ 14T 63   0342
     6 TO 13 AX 7.97 IZ 204.1 SZ 34.1                    $ 14T 63   0344
MEMBER DEPTHS PRISMATIC                                  $ 14T 63   0346
     1 TO 5 YD 12.20 YC 4.21                             $ 14T 63   0347
     6 TO 13 YD 11.96 YC 5.98                            $ 14T 63   0348
CONSTANTS E 29000. ALL                                   $ 14T 63   0350
CTE .00039 ALL                                           $ 14T 63   0352
UNITS FEET                                               $ 14T 63   0360
LOADING 'ONE'                                            $ 14T 63   0370
     JOINT LOADINGS                                      $ 14T 63   0380
       4 FORCE Y -2.                                     $ 14T 63   0390
       5 FORCE Y -3.                                     $ 14T 63   0400
     MEMBER LOADINGS FORCE Y                             $ 14T 63   0410
3 CONCENTERATED P -4.2 L 4.0                             $ 14T 63   0420
4 CONCENTRATED P -1.7 L 4.0                              $ 14T 63   0430
LOADING 'TWO'                                            $ 14T 63   0440
     MEMBERS 1 TO 5 LOAD FORCE Y GLOBAL UNIFORM -.75     $ 14T 63   0450
LOADING 'THREE' 'TEMPERATURE CHANGE'                     $ 14T 63   0460
     MEMBER TEMPERATURE LOADS                            $ 14T 63   0462
1 TO 5 FRACTIONAL LA 0.0 LB 1.0 AXIAL 1.13 BENDING Z 0.2 $ 14T 63   0472
6 TO 13 FRACTIONAL LA 0.0 LB 1.0 AXIAL 1.0               $ 14T 63   0474
LOADING COMBINATION 'FOUR' COMBINE 'ONE' .6 'TWO' 1.25   $ 14T 63   0480
LOADING COMBINATION 'FIVE' COMBINE 'ONE' .6 'TWO' 1.25 -  $ 14T 63   0482
'THREE' 1.                                               $ 14T 63   0484
LOADING LIST ALL                                         $ 14T 63   0490
UNITS INCHES                                             $ 14T 63   0500
PRINT DATA                                               $ 14T 63   0510
```

```
****************************************
*  PROBLEM DATA FROM INTERNAL STORAGE  *
****************************************
```

JOB ID - PROB 3.8 JOB TITLE - PLANE FRAME

ACTIVE UNITS -	LENGTH	WEIGHT	ANGLE	TEMPERATURE	TIME
	INCH	KIP	DEG	DEGF	SEC

********** STRUCTURAL DATA **********

ACTIVE STRUCTURE TYPE - PLANE FRAME

ACTIVE COORDINATE AXES X Y

JOINT COORDINATES----------/ STATUS---/

JOINT	X	Y	Z	CONDITION	
1	0.0	0.0	0.0	SUPPORT	ACTIVE
2	0.0	144.000	0.0		ACTIVE
3	72.000	72.000	0.0		ACTIVE
4	72.000	144.000	0.0		ACTIVE
5	144.000	144.000	0.0		ACTIVE
6	264.000	144.000	0.0		ACTIVE
7	336.000	72.000	0.0		ACTIVE
8	336.000	144.000	0.0		ACTIVE
9	408.000	0.0	0.0	SUPPORT	ACTIVE
10	408.000	144.000	0.0		ACTIVE

JOINT RELEASES----------/ELASTIC SUPPORT RELEASES----------/

JOINT	FORCE	MOMENT	THETA 1	THETA 2	THETA 3	KFX	KFY	KFZ	KMX	KMY	KMZ
1	X		160.000	0.0	0.0	0.0	0.0	0.0	0.0	0.0	0.0
9		Z	0.0	0.0	0.0	0.0	0.0	0.0	0.0	0.0	0.0

MEMBER INCIDENCES----------/ LENGTH------/ RELEASES----------/ STATUS--/

MEMBER	START	END	LOCAL COORD.	START FORCE	START MOMENT	END FORCE	END MOMENT	
1	2	4	72.000					ACTIVE
2	4	5	72.000					ACTIVE
3	5	6	120.000					ACTIVE
4	6	8	72.000					ACTIVE
5	8	10	72.000					ACTIVE
6	1	2	144.000		Z			ACTIVE
7	3	4	72.000		Z		Z	ACTIVE
8	7	8	72.000		Z		Z	ACTIVE
9	9	10	144.000					ACTIVE
10	1	3	101.823		Z			ACTIVE
11	3	5	101.823					ACTIVE
12	6	7	101.823					ACTIVE
13	7	9	101.823					ACTIVE

MEMBER PROPERTIES----------/

MEMBER/SEG	TYPE	SEG.L	COMP	AX/YD	AY/ZD	AZ/YC	IX/ZC	IY/EY	IZ/EZ	SY	SZ
1	PRISMATIC			12.440	0.0	0.0	0.0	0.0	295.600	0.0	70.100
				12.200	0.0	4.210	0.0	0.0	0.0		
2	PRISMATIC			12.440	0.0	0.0	0.0	0.0	295.600	0.0	70.100
				12.200	0.0	4.210	0.0	0.0	0.0		
3	PRISMATIC			12.440	0.0	0.0	0.0	0.0	295.600	0.0	70.100
				12.200	0.0	4.210	0.0	0.0	0.0		
4	PRISMATIC			12.440	0.0	0.0	0.0	0.0	295.600	0.0	70.100
				12.200	0.0	4.210	0.0	0.0	0.0		
5	PRISMATIC			12.440	0.0	0.0	0.0	0.0	295.600	0.0	70.100
				12.200	0.0	4.210	0.0	0.0	0.0		
6	PRISMATIC			7.970	0.0	0.0	0.0	0.0	204.100	0.0	34.100
				11.960	0.0	5.980	0.0	0.0	0.0		
7	PRISMATIC			7.970	0.0	0.0	0.0	0.0	204.100	0.0	34.100
				11.960	0.0	5.980	0.0	0.0	0.0		
8	PRISMATIC			7.970	0.0	0.0	0.0	0.0	204.100	0.0	34.100
				11.960	0.0	5.980	0.0	0.0	0.0		
9	PRISMATIC			7.970	0.0	0.0	0.0	0.0	204.100	0.0	34.100
				11.960	0.0	5.980	0.0	0.0	0.0		
10	PRISMATIC			7.970	0.0	0.0	0.0	0.0	204.100	0.0	34.100
				11.960	0.0	5.980	0.0	0.0	0.0		
11	PRISMATIC			7.970	0.0	0.0	0.0	0.0	204.100	0.0	34.100
				11.960	0.0	5.980	0.0	0.0	0.0		
12	PRISMATIC			7.970	0.0	0.0	0.0	0.0	204.100	0.0	34.100
				11.960	0.0	5.980	0.0	0.0	0.0		
13	PRISMATIC			7.970	0.0	0.0	0.0	0.0	204.100	0.0	34.100
				11.960	0.0	5.980	0.0	0.0	0.0		

MEMBER CONSTANTS----------/

CONSTANT	STANDARD VALUE	DOMAIN.	VALUE	MEMBER LIST
E	29999.996094	ALL		
G	0.0	ALL		
DENSITY	0.001000	ALL		
CTE	0.000390	ALL		
BETA	0.0	ALL		
POISSON	0.0	ALL		

********** DESIGN DATA **********

USER DATA SET

PARAMETER DICTIONARY----------/

NAME	TREATMENT	STANDARD	L	W	A	TEMP	TIME

STRUDL DATA SET

PARAMETER DICTIONARY----------/

NAME	TREATMENT	STANDARD	L	W	A	TEMP	TIME
FYLD	STANDARD	36.00	-2	1			
PF	STANDARD	1.00					
FBLTUP	STANDARD	1.00					
CODE	REQUIRED						
KY	STANDARD	1.00					
KZ	STANDARD	1.00					
CB	STANDARD	1.00					
LY	COMPUTE	QOSTULEN					
LZ	COMPUTE	QOSTULEN					
CMY	STANDARD	0.85					
CMZ	STANDARD	0.85					
UNLCF	COMPUTE	QOSTULEN					
VALUES	STANDARD	1.00					
TRACE	STANDARD	1.00					
PRIOTA	STANDARD	1.00					
TBLNAM	STANDARD	STEELWF					
MXTRIALS	STANDARD	25.00					
SECNDARY	STANDARD	1.00					

USER DATA SET

CONSTRAINT DICTIONARY----------/

NAME	RETRIEVAL

STRUDL DATA SET

CONSTRAINT DICTIONARY----------/

NAME	RETRIEVAL
AX	TABULAR
AY	TABULAR
AZ	TABULAR
IX	TABULAR
IY	TABULAR
IZ	TABULAR
SY	TABULAR
SZ	TABULAR
YO	TABULAR
ZO	TABULAR
FLTK	TABULAR
WBTK	TABULAR
YO/AFL	TABULAR
RY	TABULAR
RZ	TABULAR
COMP	TABULAR
YC	TABULAR
ZC	TABULAR
WEIGHT	TABULAR

********** LOADING DATA **********

LOADING - ONE STATUS - ACTIVE

MEMBER AND ELEMENT LOADS----------/

MEMBER/ELEMENT							
3	CONCEN.	LOAD	FORCE	Y	P	-4.200	L 48.000
4	CONCEN.	LOAD	FORCE	Y	P	-1.700	L 48.000

JOINT LOADS----------/ ----------/

JOINT	STEP	FORCE X	Y	Z	MOMENT X	Y	Z
4		0.0	-2.000	0.0	0.0	0.0	0.0
5		0.0	-3.000	0.0	0.0	0.0	0.0

JOINT DISPLACEMENTS----------/ ----------/

JOINT	STEP	DISP. X	Y	Z	ROT. X	Y	Z

JOINT FORCE ASSUMPTIONS ----------/

JOINT	THETA	1	2	3	FORCE X	Y	Z	MOMENT X	Y	Z

NO ASSUMPTIONS GIVEN FOR THIS LOADING

MEMBER FORCE ASSUMPTIONS ----------/ ----------/

MEMBER	COMPONENT	DISTANCE	VALUE	COMPONENT	DISTANCE	VALUE

NO ASSUMPTIONS GIVEN FOR THIS LOADING

```
LOADING - TWO                                                                                    STATUS - ACTIVE

MEMBER AND ELEMENT LOADS-----------------------------------------------------------------------------------------------/
MEMBER/ELEMENT
1          UNIFORM   LOAD GL FORCE  Y  FR   W    -0.062   LA  0.0     LB   1.000
2          UNIFORM   LOAD GL FORCE  Y  FR   W    -0.062   LA  0.0     LB   1.000
3          UNIFORM   LOAD GL FORCE  Y  FR   W    -0.062   LA  0.0     LB   1.000
4          UNIFORM   LOAD GL FORCE  Y  FR   W    -0.062   LA  0.0     LB   1.000
5          UNIFORM   LOAD GL FORCE  Y  FR   W    -0.062   LA  0.0     LB   1.000

JOINT LOADS-----------------------------------------/ ------------------------------------/
JOINT      STEP   FORCE X           Y           Z      MOMENT X           Y           Z

JOINT DISPLACEMENTS---------------------------------/ ------------------------------------/
JOINT      STEP   DISP. X           Y           Z      ROT.   X           Y           Z

JOINT FORCE ASSUMPTIONS ------------------------------------------------------------------------------------------------/

JOINT      THETA  1        2        3     FORCE X           Y           Z      MOMENT X           Y           Z
NO ASSUMPTIONS GIVEN FOR THIS LOADING


MEMBER FORCE ASSUMPTIONS ----------------------/    ----------------------------------/

MEMBER       COMPONENT   DISTANCE     VALUE          COMPONENT   DISTANCE     VALUE
NO ASSUMPTIONS GIVEN FOR THIS LOADING


LOADING - THREE        TEMPERATURE CHANGE                                                        STATUS - ACTIVE

MEMBER AND ELEMENT LOADS-----------------------------------------------------------------------------------------------/
MEMBER/ELEMENT
1          TEMPERATURE LOAD     LA   0.0    LB   1.000  AXIAL    1.130  BENDING  Y    0.0    Z    0.200
2          TEMPERATURE LOAD     LA   0.0    LB   1.000  AXIAL    1.130  BENDING  Y    0.0    Z    0.200
3          TEMPERATURE LOAD     LA   0.0    LB   1.000  AXIAL    1.130  BENDING  Y    0.0    Z    0.200
4          TEMPERATURE LOAD     LA   0.0    LB   1.000  AXIAL    1.130  BENDING  Y    0.0    Z    0.200
5          TEMPERATURE LOAD     LA   0.0    LB   1.000  AXIAL    1.130  BENDING  Y    0.0    Z    0.200
6          TEMPERATURE LOAD     LA   0.0    LB   1.000  AXIAL    1.000  BENDING  Y    0.0    Z    0.0
7          TEMPERATURE LOAD     LA   0.0    LB   1.000  AXIAL    1.000  BENDING  Y    0.0    Z    0.0
8          TEMPERATURE LOAD     LA   0.0    LB   1.000  AXIAL    1.000  BENDING  Y    0.0    Z    0.0
9          TEMPERATURE LOAD     LA   0.0    LB   1.000  AXIAL    1.000  BENDING  Y    0.0    Z    0.0
10         TEMPERATURE LOAD     LA   0.0    LB   1.000  AXIAL    1.000  BENDING  Y    0.0    Z    0.0
11         TEMPERATURE LOAD     LA   0.0    LB   1.000  AXIAL    1.000  BENDING  Y    0.0    Z    0.0
12         TEMPERATURE LOAD     LA   0.0    LB   1.000  AXIAL    1.000  BENDING  Y    0.0    Z    0.0
13         TEMPERATURE LOAD     LA   0.0    LB   1.000  AXIAL    1.000  BENDING  Y    0.0    Z    0.0

JOINT LOADS-----------------------------------------/ ------------------------------------/
JOINT      STEP   FORCE X           Y           Z      MOMENT X           Y           Z

JOINT DISPLACEMENTS---------------------------------/ ------------------------------------/
JOINT      STEP   DISP. X           Y           Z      ROT.   X           Y           Z

JOINT FORCE ASSUMPTIONS ------------------------------------------------------------------------------------------------/

JOINT      THETA  1        2        3     FORCE X           Y           Z      MOMENT X           Y           Z
NO ASSUMPTIONS GIVEN FOR THIS LOADING


MEMBER FORCE ASSUMPTIONS ----------------------/    ----------------------------------/

MEMBER       COMPONENT   DISTANCE     VALUE          COMPONENT   DISTANCE     VALUE
NO ASSUMPTIONS GIVEN FOR THIS LOADING


LOADING - FOUR                                                                                   STATUS - ACTIVE

         COMBINATION GIVEN -   ONE        0.600      TWO        1.250


LOADING - FIVE                                                                                   STATUS - ACTIVE

         COMBINATION GIVEN -   ONE        0.600      TWO        1.250      THREE      1.000


*****************************************
*  END OF DATA FROM  INTERNAL STORAGE  *
*****************************************
```

```
STIFFNESS ANALYSIS                                    $ 14T 63    0520
UNITS RADIANS                                         $ 14T 63    0530
OUTPUT DECIMAL 4                                      $ 14T 63    0540
LIST FORCES REACTIONS DISPLACEMENTS                   $ 14T 63    0550
```

```
****************************
*RESULTS OF LATEST ANALYSES*
****************************
```

PROBLEM - PROB 3.8 TITLE - PLANE FRAME

ACTIVE UNITS INCH KIP RAD DEGF SEC

ACTIVE STRUCTURE TYPE PLANE FRAME

ACTIVE COORDINATE AXES X Y

LOADING - ONE

MEMBER FORCES

MEMBER	JOINT	FORCE AXIAL	FORCE SHEAR Y	FORCE SHEAR Z	MOMENT TORSIONAL	MOMENT BENDING Y	MOMENT BENDING Z
1	2	0.5513	3.4581				79.3924
1	4	-0.5513	-3.4581				169.5896
2	4	0.5513	1.5952				-169.5896
2	5	-0.5513	-1.5952				284.4429
3	5	2.2609	1.2118				-424.9231
3	6	-2.2609	2.9882				267.9348
4	6	0.7638	-0.9028				-178.7478
4	8	-0.7638	2.6028				72.9473
5	8	0.7638	-1.8319				-72.9473
5	10	-0.7638	1.8319				-58.9496
5	1	3.4581	-0.5513				0.0000
6	2	-3.4581	0.5513				-79.3924
7	3	0.1371	-0.0000				-0.0000
7	4	-0.1371	0.0000				-0.0000
8	7	0.7709	0.0000				0.0
8	9	-0.7709	-0.0000				0.0000
9	9	1.8319	0.7638				51.0355
9	10	-1.8319	-0.7638				58.9496
10	1	3.1560	0.7383				0.0000
10	3	-3.1560	-0.7383				75.1757
11	3	3.0590	0.6414				-75.1757
11	5	-3.0590	-0.6414				140.4802
12	6	2.5333	-0.4160				-89.1871
12	7	-2.5333	0.4160				46.8275
13	7	3.0784	-0.9611				-46.8275
13	9	-3.0784	0.9611				-51.0355

RESULTANT JOINT LOADS - SUPPORTS

JOINT	FORCE X FORCE	FORCE Y FORCE	FORCE Z FORCE	MOMENT X MOMENT	MOMENT Y MOMENT	MOMENT Z MOMENT
1	2.2609	6.2118				0.0000
9	-2.2609	4.6882				-0.0000

RESULTANT JOINT DISPLACEMENTS - SUPPORTS

JOINT	DISPLACEMENT X DISP.	DISPLACEMENT Y DISP.	DISPLACEMENT Z DISP.	ROTATION X ROT.	ROTATION Y ROT.	ROTATION Z ROT.
1	-1.1934	0.4344				0.0
9	0.0	0.0				0.0031

RESULTANT JOINT DISPLACEMENTS - FREE JOINTS

JOINT	DISPLACEMENT X DISP.	DISPLACEMENT Y DISP.	DISPLACEMENT Z DISP.	ROTATION X ROT.	ROTATION Y ROT.	ROTATION Z ROT.
2	-0.4195	0.4322				-0.0060
3	-0.7611	0.0000				-0.0056
4	-0.4196	-0.0000				-0.0056
5	-0.4197	-0.3432				-0.0037
6	-0.4205	-0.4240				0.0020
7	-0.2334	-0.2354				0.0031
8	-0.4206	-0.2356				0.0031
10	-0.4208	-0.0011				0.0032

LOADING - TWO

MEMBER FORCES

MEMBER	JOINT	FORCE AXIAL	FORCE SHEAR Y	FORCE SHEAR Z	MOMENT TORSIONAL	MOMENT BENDING Y	MOMENT BENDING Z
1	2	0.8850	7.3109				127.4435
1	4	-0.8850	-2.8109				236.9385
2	4	0.8850	3.6863				-236.9385
2	5	-0.8850	0.8137				340.3496
3	5	4.6406	3.7500				-519.7471
3	6	-4.6406	3.7500				519.7471
4	6	1.8618	-0.2278				-348.5327
4	8	-1.8618	4.7278				170.1339
5	8	1.8618	-2.1389				-170.1339
5	10	-1.8618	6.6389				-145.8667
6	1	7.3109	-0.8850				-0.0000
6	2	-7.3109	0.8850				-127.4435
7	3	5.8754	-0.0000				0.0
7	4	-0.8754	0.0000				-0.0000
8	7	2.5889	0.0000				0.0
8	8	-2.5889	-0.0000				0.0000
9	9	6.6389	1.8618				122.2269
9	10	-6.6389	-1.8618				145.8667
10	1	6.5017	1.1904				0.0000
10	3	-6.5017	-1.1904				121.2131
11	3	5.8827	0.5714				-121.2131
11	5	-5.8827	-0.5714				179.3975
12	6	4.4556	-0.5256				-171.2145
12	7	-4.4556	0.5256				117.6927
13	7	6.2862	-2.3562				-117.6927
13	9	-6.2862	2.3562				-122.2269

RESULTANT JOINT LOADS - SUPPORTS

JOINT	FORCE X FORCE	FORCE Y FORCE	FORCE Z FORCE	MOMENT X MOMENT	MOMENT Y MOMENT	MOMENT Z MOMENT
1	4.6406	12.7500				0.0000
9	-4.6406	12.7500				0.0000

RESULTANT JOINT DISPLACEMENTS - SUPPORTS

JOINT	DISPLACEMENT X DISP.	DISPLACEMENT Y DISP.	DISPLACEMENT Z DISP.	ROTATION X ROT.	ROTATION Y ROT.	ROTATION Z ROT.
1	-1.8227	0.6634				0.0
9	0.0	0.0				0.0051

RESULTANT JOINT DISPLACEMENTS - FREE JOINTS

JOINT	DISPLACEMENT X DISP.	DISPLACEMENT Y DISP.	DISPLACEMENT Z DISP.	ROTATION X ROT.	ROTATION Y ROT.	ROTATION Z ROT.
2	-0.6709	0.6589				-0.0090
3	-1.1785	0.0152				-0.0083
4	-0.6711	0.0149				-0.0083
5	-0.6713	-0.4957				-0.0057
6	-0.6728	-0.6795				0.0026
7	-0.3898	-0.3937				0.0051
8	-0.6732	-0.3945				0.0050
10	-0.6736	-0.0041				0.0054

LOADING - THREE TEMPERATURE CHANGE

MEMBER FORCES

MEMBER	JOINT	FORCE AXIAL	FORCE SHEAR Y	FORCE SHEAR Z	MOMENT TORSIONAL	MOMENT BENDING Y	MOMENT BENDING Z
1	2	0.2200	0.0150				31.6841
1	4	-0.2200	-0.0150				-30.6008
2	4	0.2200	0.1858				30.6008
2	5	-0.2200	-0.1858				17.2241
3	5	0.0000	0.0000				0.0000
3	6	-0.0000	-0.0000				-0.0000
4	6	0.3947	-0.3720				15.7607
4	8	-0.3947	0.3720				-42.5480
5	8	0.3947	0.1051				42.5480
5	10	-0.3947	-0.1051				-34.9788
6	1	0.0150	-0.2200				0.0000
6	2	-0.0150	0.2200				-31.6841
7	3	0.1707	-0.0000				0.0
7	4	-0.1707	0.0000				-0.0000
8	7	0.4772	0.0000				-0.0000
8	8	-0.4772	-0.0000				0.0000
9	9	-0.1051	0.3947				21.8588
9	10	0.1051	-0.3947				34.9788
10	1	-0.1662	0.1449				0.0000
10	3	0.1662	-0.1449				14.7588
11	3	-0.2870	0.0242				-14.7588
11	5	0.2870	-0.0242				17.2241
12	6	-0.5422	-0.0160				-15.7607
12	7	0.5422	0.0160				14.1292
13	7	-0.2048	-0.3534				-14.1292
13	9	0.2048	0.3534				-21.8588

RESULTANT JOINT LOADS - SUPPORTS

JOINT	FORCE X FORCE	FORCE Y FORCE	FORCE Z FORCE	MOMENT X MOMENT	MOMENT Y MOMENT	MOMENT Z MOMENT
1	0.0000	0.0000				0.0000
9	-0.0000	-0.0000				0.0000

RESULTANT JOINT DISPLACEMENTS - SUPPORTS

JOINT	DISPLACEMENT X DISP.	DISPLACEMENT Y DISP.	DISPLACEMENT Z DISP.	ROTATION X ROT.	ROTATION Y ROT.	ROTATION Z ROT.
1	-0.3414	0.1242				0.0
9	0.0	0.0				0.0003

RESULTANT JOINT DISPLACEMENTS - FREE JOINTS

JOINT	DISPLACEMENT X DISP.	DISPLACEMENT Y DISP.	DISPLACEMENT Z DISP.	ROTATION X ROT.	ROTATION Y ROT.	ROTATION Z ROT.
2	-0.2157	0.1804				-0.0011
3	-0.2390	0.0782				-0.0009
4	-0.1840	0.1062				-0.0009
5	-0.1524	0.0478				-0.0007
6	-0.0995	0.0133				0.0001
7	-0.0549	0.0014				0.0004
8	-0.0678	0.0293				0.0003
10	-0.0362	-0.0562				0.0004

LOADING - FOUR

MEMBER FORCES

MEMBER	JOINT	FORCE AXIAL	FORCE SHEAR Y	FORCE SHEAR Z	MOMENT TORSIONAL	MOMENT BENDING Y	MOMENT BENDING Z
1	2	1.4371	11.2134				206.9397
1	4	-1.4371	-5.5884				397.9268
2	4	1.4371	5.5649				-397.9268
2	5	-1.4371	0.0601				596.1028
3	5	7.1573	5.4145				-904.6377
3	6	-7.1573	6.4804				810.4448
4	6	2.7855	-0.8264				-542.9143
4	8	-2.7855	7.4714				256.4355
5	8	2.7855	-3.7728				-256.4355
5	10	-2.7855	9.3978				-217.7032
6	1	11.2134	-1.4371				-0.0000
6	2	-11.2134	1.4371				-206.9397
7	3	1.1765	-0.0000				-0.0000
7	4	-1.1765	0.0000				-0.0000
8	7	3.6986	0.0000				0.0
8	8	-3.6986	-0.0000				0.0000
9	9	9.3978	2.7855				183.4049
9	10	-9.3978	-2.7855				217.7032
10	1	10.0207	1.9310				0.0000
10	3	-10.0207	-1.9310				196.6217
11	3	9.1887	1.0991				-196.6217
11	5	-9.1887	-1.0991				308.5349
12	6	7.0894	-0.9066				-267.5303
12	7	-7.0894	0.9066				175.2124
13	7	9.7047	-3.5220				-175.2123
13	9	-9.7047	3.5220				-183.4049

RESULTANT JOINT LOADS - SUPPORTS

JOINT	FORCE X FORCE	FORCE Y FORCE	FORCE Z FORCE	MOMENT X MOMENT	MOMENT Y MOMENT	MOMENT Z MOMENT
1	7.1573	19.6645				0.0000
9	-7.1573	18.7504				-0.0000

RESULTANT JOINT DISPLACEMENTS - SUPPORTS

JOINT	DISPLACEMENT X DISP.	DISPLACEMENT Y DISP.	DISPLACEMENT Z DISP.	ROTATION X ROT.	ROTATION Y ROT.	ROTATION Z ROT.
1	-2.9944	1.0899				0.0
9	0.0	0.0				0.0082

RESULTANT JOINT DISPLACEMENTS - FREE JOINTS

JOINT	DISPLACEMENT X DISP.	DISPLACEMENT Y DISP.	DISPLACEMENT Z DISP.	ROTATION X ROT.	ROTATION Y ROT.	ROTATION Z ROT.
2	-1.0904	1.0829				-0.0149
3	-1.0298	0.0190				-0.0137
4	-1.0907	0.0186				-0.0138
5	-1.0909	-0.8256				-0.0094
6	-1.0933	-1.1038				0.0045
7	-0.6273	-0.6333				0.0093
8	-1.0939	-0.6345				0.0082
10	-1.0944	-0.0059				0.0086

LOADING - FIVE

MEMBER FORCES

MEMBER	JOINT	FORCE AXIAL	FORCE SHEAR Y	FORCE SHEAR Z	MOMENT TORSIONAL	MOMENT BENDING Y	MOMENT BENDING Z
1	2	1.6571	11.2285				238.6238
1	4	-1.6571	-5.6035				367.3259
2	4	1.6571	5.7507				-367.3259
2	5	-1.6571	-0.1257				578.8787
3	5	7.1573	5.4145				-904.6377
3	6	-7.1573	6.4804				810.4448
4	6	3.1802	-1.1984				-527.1539
4	8	-3.1802	7.8434				213.8876
5	8	3.1802	-3.6676				-213.8876
5	10	-3.1802	9.2926				-252.6820
6	1	11.2285	-1.6571				-0.0000
6	2	-11.2285	1.6571				-238.6238
7	3	1.3473	-0.0000				-0.0000
7	4	-1.3473	0.0000				-0.0000
8	7	4.1758	0.0000				-0.0000
8	8	-4.1758	-0.0000				0.0000
9	9	9.2926	3.1802				205.2637
9	10	-9.2926	-3.1802				252.6820
10	1	9.8544	2.0760				0.0000
10	3	-9.8544	-2.0760				211.3805
11	3	8.9018	1.1233				-211.3805
11	5	-8.9018	-1.1233				325.7590
12	6	6.5472	-0.9227				-283.2910
12	7	-6.5472	0.9227				189.3416
13	7	9.4999	-3.8754				-189.3415
13	9	-9.4999	3.8754				-205.2637

RESULTANT JOINT LOADS - SUPPORTS

JOINT	FORCE X FORCE	FORCE Y FORCE	FORCE Z FORCE	MOMENT X MOMENT	MOMENT Y MOMENT	MOMENT Z MOMENT
1	7.1573	19.6645				0.0000
9	-7.1573	18.7504				-0.0000

RESULTANT JOINT DISPLACEMENTS - SUPPORTS

JOINT	DISPLACEMENT X DISP.	DISPLACEMENT Y DISP.	DISPLACEMENT Z DISP.	ROTATION X ROT.	ROTATION Y ROT.	ROTATION Z ROT.
1	-3.3358	1.2141				0.0
9	0.0	0.0				0.0085

RESULTANT JOINT DISPLACEMENTS - FREE JOINTS

JOINT	DISPLACEMENT X DISP.	DISPLACEMENT Y DISP.	DISPLACEMENT Z DISP.	ROTATION X ROT.	ROTATION Y ROT.	ROTATION Z ROT.
2	-1.3061	1.2633				-0.0160
3	-2.1688	0.0972				-0.0146
4	-1.2747	0.1248				-0.0147
5	-1.2433	-0.7777				-0.0100
6	-1.1928	-1.0905				0.0046
7	-0.6822	-0.6319				0.0086
8	-1.1617	-0.6051				0.0085
10	-1.1306	0.0504				0.0091

SECTION FRACTIONAL DS .0 .2 $ 14T 63 0551

LIST SECTION STRESSES MEMBER 3 $ 14T 63 0552

```
***************************
*RESULTS OF LATEST ANALYSES*
***************************
```

PROBLEM - PROB 3.8 TITLE - PLANE FRAME

ACTIVE UNITS INCH KIP RAD DEGF SEC

ACTIVE STRUCTURE TYPE PLANE FRAME

ACTIVE COORDINATE AXES X Y

INTERNAL MEMBER RESULTS

MEMBER NORMAL STRESS

MEMBER 3

LOADING ONE

DISTANCE FROM START		STRESS AXIAL	Y SHEAR	Z SHEAR	Y BENDING	Z BENDING	MAX NORMAL	MIN NORMAL
0.0	FR	-0.1817	0.0	0.0	0.0	6.0617	5.8799	-6.2434
0.200		-0.1817	0.0	0.0	0.0	6.4765	6.2948	-6.6583
0.400		-0.1817	0.0	0.0	0.0	6.8914	6.7097	-7.0731
0.600		-0.1817	0.0	0.0	0.0	5.8683	5.6866	-6.0501
0.800		-0.1817	0.0	0.0	0.0	4.8453	4.6635	-5.0270
1.000		-0.1817	0.0	0.0	0.0	3.8222	3.6404	-4.0039

LOADING TWO

DISTANCE FROM START		STRESS AXIAL	Y SHEAR	Z SHEAR	Y BENDING	Z BENDING	MAX NORMAL	MIN NORMAL
0.0	FR	-0.3730	0.0	0.0	0.0	7.4144	7.0413	-7.7874
0.200		-0.3730	0.0	0.0	0.0	8.4415	8.0684	-8.8145
0.400		-0.3730	0.0	0.0	0.0	8.9550	8.5820	-9.3281
0.600		-0.3730	0.0	0.0	0.0	8.9550	8.5820	-9.3281
0.800		-0.3730	0.0	0.0	0.0	8.4415	8.0684	-8.8145
1.000		-0.3730	0.0	0.0	0.0	7.4144	7.0413	-7.7874

LOADING THREE TEMPERATURE CHANGE

DISTANCE FROM START		STRESS AXIAL	Y SHEAR	Z SHEAR	Y BENDING	Z BENDING	MAX NORMAL	MIN NORMAL
0.0	FR	-0.0000	0.0	0.0	0.0	-0.0000	0.0000	-0.0000
0.200		-0.0000	0.0	0.0	0.0	-0.0000	0.0000	-0.0000
0.400		-0.0000	0.0	0.0	0.0	-0.0000	0.0000	-0.0000
0.600		-0.0000	0.0	0.0	0.0	-0.0000	0.0000	-0.0000
0.800		-0.0000	0.0	0.0	0.0	-0.0000	0.0000	-0.0000
1.000		-0.0000	0.0	0.0	0.0	-0.0000	0.0000	-0.0000

LOADING FOUR

DISTANCE FROM START		STRESS AXIAL	Y SHEAR	Z SHEAR	Y BENDING	Z BENDING	MAX NORMAL	MIN NORMAL
0.0	FR	-0.5753	0.0	0.0	0.0	12.9050	12.3296	-13.4803
0.200		-0.5753	0.0	0.0	0.0	14.4377	13.8624	-15.0131
0.400		-0.5753	0.0	0.0	0.0	15.3296	14.7542	-15.9039
0.600		-0.5753	0.0	0.0	0.0	14.7148	14.1394	-15.2901
0.800		-0.5753	0.0	0.0	0.0	13.4590	12.8836	-14.0343
1.000		-0.5753	0.0	0.0	0.0	11.5613	10.9859	-12.1366

LOADING FIVE

DISTANCE FROM START		STRESS AXIAL	Y SHEAR	Z SHEAR	Y BENDING	Z BENDING	MAX NORMAL	MIN NORMAL
0.0	FR	-0.5753	0.0	0.0	0.0	12.9050	12.3296	-13.4803
0.200		-0.5753	0.0	0.0	0.0	14.4377	13.8624	-15.0131
0.400		-0.5753	0.0	0.0	0.0	15.3296	14.7542	-15.9039
0.600		-0.5753	0.0	0.0	0.0	14.7148	14.1394	-15.2901
0.800		-0.5753	0.0	0.0	0.0	13.4590	12.8836	-14.0343
1.000		-0.5753	0.0	0.0	0.0	11.5613	10.9859	-12.1366

```
CHANGES                                                    $ 14T 63     0560
MEMBERS 1 TO 5 PROPERTIES PRISMATIC SZ 37.0                $ 14T 63     0570
LIST SECTION STRESSES MEMBER 3                             $ 14T 63     0600
```

```
****************************
*RESULTS OF LATEST ANALYSES*
****************************
```

PROBLEM - PROB 3.8 TITLE - PLANE FRAME

ACTIVE UNITS INCH KIP RAD DEGF SEC

ACTIVE STRUCTURE TYPE PLANE FRAME

ACTIVE COORDINATE AXES X Y

INTERNAL MEMBER RESULTS

MEMBER NORMAL STRESS

MEMBER 3

LOADING ONE

DISTANCE FROM START	AXIAL	Y SHEAR	Z SHEAR	Y BENDING	Z BENDING	MAX NORMAL	MIN NORMAL
0.0 FR	-0.1817	0.0	0.0	0.0	11.4844	11.3027	-11.6661
0.200	-0.1817	0.0	0.0	0.0	12.2704	12.0887	-12.4522
0.400	-0.1817	0.0	0.0	0.0	13.0564	12.8747	-13.2382
0.600	-0.1817	0.0	0.0	0.0	11.1181	10.9364	-11.2999
0.800	-0.1817	0.0	0.0	0.0	9.1798	8.9981	-9.3615
1.000	-0.1817	0.0	0.0	0.0	7.2415	7.0597	-7.4232

LOADING TWO

DISTANCE FROM START	AXIAL	Y SHEAR	Z SHEAR	Y BENDING	Z BENDING	MAX NORMAL	MIN NORMAL
0.0 FR	-0.3730	0.0	0.0	0.0	14.0472	13.6742	-14.4203
0.200	-0.3730	0.0	0.0	0.0	15.9932	15.6201	-16.3662
0.400	-0.3730	0.0	0.0	0.0	16.9661	16.5931	-17.3392
0.600	-0.3730	0.0	0.0	0.0	16.9661	16.5931	-17.3392
0.800	-0.3730	0.0	0.0	0.0	15.9932	15.6201	-16.3662
1.000	-0.3730	0.0	0.0	0.0	14.0472	13.6742	-14.4203

LOADING THREE TEMPERATURE CHANGE

DISTANCE FROM START	AXIAL	Y SHEAR	Z SHEAR	Y BENDING	Z BENDING	MAX NORMAL	MIN NORMAL
0.0 FR	-0.0000	0.0	0.0	0.0	-0.0000	0.0000	-0.0000
0.200	-0.0000	0.0	0.0	0.0	-0.0000	0.0000	-0.0000
0.400	-0.0000	0.0	0.0	0.0	-0.0000	0.0000	-0.0000
0.600	-0.0000	0.0	0.0	0.0	-0.0000	0.0000	-0.0000
0.800	-0.0000	0.0	0.0	0.0	-0.0000	0.0000	-0.0000
1.000	-0.0000	0.0	0.0	0.0	-0.0000	0.0000	-0.0000

LOADING FOUR

DISTANCE FROM START	AXIAL	Y SHEAR	Z SHEAR	Y BENDING	Z BENDING	MAX NORMAL	MIN NORMAL
0.0 FR	-0.5753	0.0	0.0	0.0	24.4497	23.8743	-25.0250
0.200	-0.5753	0.0	0.0	0.0	27.3537	26.7783	-27.9290
0.400	-0.5753	0.0	0.0	0.0	29.0415	28.4661	-29.6168
0.600	-0.5753	0.0	0.0	0.0	27.8785	27.3032	-28.4539
0.800	-0.5753	0.0	0.0	0.0	25.4993	24.9240	-26.0747
1.000	-0.5753	0.0	0.0	0.0	21.9039	21.3286	-22.4793

LOADING FIVE

DISTANCE FROM START	AXIAL	Y SHEAR	Z SHEAR	Y BENDING	Z BENDING	MAX NORMAL	MIN NORMAL
0.0 FR	-0.5753	0.0	0.0	0.0	24.4497	23.8743	-25.0250
0.200	-0.5753	0.0	0.0	0.0	27.3537	26.7783	-27.9290
0.400	-0.5753	0.0	0.0	0.0	29.0415	28.4661	-29.6168
0.600	-0.5753	0.0	0.0	0.0	27.8785	27.3032	-28.4539
0.800	-0.5753	0.0	0.0	0.0	25.4993	24.9240	-26.0747
1.000	-0.5753	0.0	0.0	0.0	21.9039	21.3286	-22.4793

```
****************************
*RESULTS OF LATEST ANALYSES*
****************************
```

PROBLEM - PROB 3.8 TITLE - PLANE FRAME

ACTIVE UNITS INCH KIP RAD DEGF SEC

ACTIVE STRUCTURE TYPE PLANE FRAME

ACTIVE COORDINATE AXES X Y

INTERNAL MEMBER RESULTS

MEMBER STRESS ENEVLOPE

MEMBER 3

DISTANCE FROM STR		STRESS MAX NORMAL	FOR LOAD	MIN NORMAL	FOR LOAD
0.0	FR	23.8743	FOUR	-25.0250	FOUR
0.200		26.7783	FOUR	-27.9290	FOUR
0.400		28.4661	FOUR	-29.6168	FOUR
0.600		27.3032	FOUR	-28.4539	FOUR
0.800		24.9240	FOUR	-26.0747	FOUR
1.000		21.3286	FOUR	-22.4793	FOUR

PLANE IDENTIFIED BY - PLANE Z EQUALS 0.0

IN PLANE JOINTS

JOINT	COORDINATES X	Y	Z
1	0.0	0.0	0.0
2	0.0	144.0000	0.0
3	72.0000	72.0000	0.0
4	72.0000	144.0000	0.0
5	144.0000	144.0000	0.0
6	264.0000	144.0000	0.0
7	336.0000	72.0000	0.0
8	336.0000	144.0000	0.0
9	408.0000	0.0	0.0
10	408.0000	144.0000	0.0

IN PLANE MEMBERS

MEMBER INCIDENCES

MEMBER	START	END
6	1	2
10	1	3
1	2	4
7	3	4
11	3	5
2	4	5
3	5	6
4	6	8
12	6	7
8	7	8
13	7	9
5	8	10
9	9	10

```
PLOT DEVICE PRINTER LENGTH 8.5 WIDTH 12.                    $ 14T 63     0613
PLOT FORMAT ORI NON STA                                     $ 14T 63     0615
PLOT PLANE                                                  $ 14T 63     0618
```

```
                                  Y          HORIZONTAL SCALE   50.0000 UNITS PER INCH
                                  *
                                  *
                                  *
                                  *          VERTICAL   SCALE   50.0000 UNITS PER INCH
                ORIENTATION       *****X
```

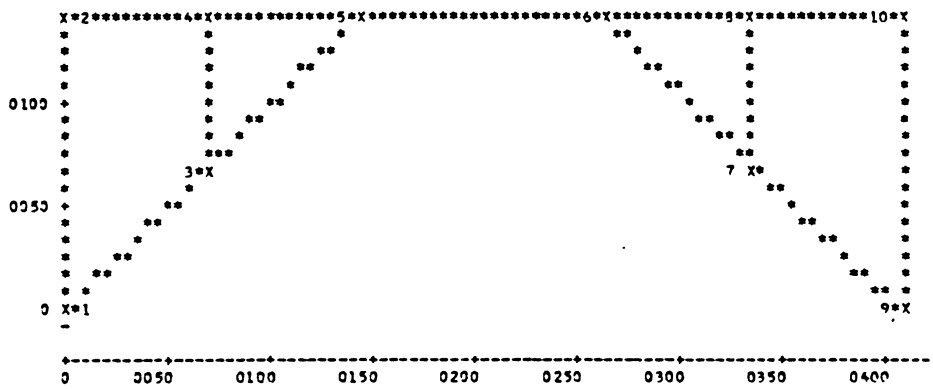

3.9 Influence Lines by the Müller-Breslau Principle

This problem illustrates a method by which STRUDL can be used to generate influence lines. Influence lines are very useful for determining which loading condition will cause maximum stresses at a given point in a structure. Influence lines also give the designer a "feel" for how a structure will behave under different loading conditions, by illustrating the relative effect of loads applied at various points in the structure.

The determination of influence lines is one of the more simple and more powerful capabilities of the STRUDL system. To obtain each influence line, the Müller-Breslau principle is used. The Müller-Breslau principle is based on the concept of virtual work and may be stated as follows: "If an internal stress component, or a reaction component, is considered to act through some small distance and thereby to deflect or displace a structure, the curve of the deflected or displaced structure will be, to some scale, the influence line for the stress or reaction component." This can be illustrated by considering the simply supported beam shown in Figure 3.9a.

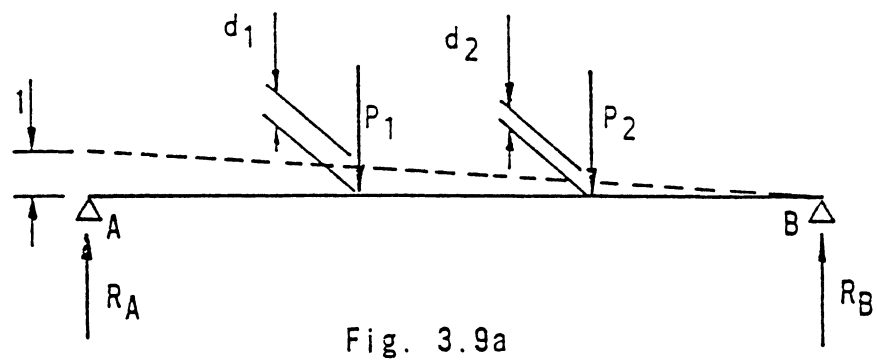

Fig. 3.9a

Suppose that support A is moved through a vertical distance of one. The beam then assumes the position shown by the dashed line. Now notice that the work done by the reaction at A as it moves through a distance of one unit, must be equal to the work done on the loads P_1 & P_2 as they move through the distances d_1 & d_2 respectively. Therefore,

$$R_A(1) = P_1(d_1) + P_2(d_2)$$

or

$$R_A = P_1 d_1 + P_2 d_2$$

In general, the Reaction at A is equal to the sum of the loads times the displacements they undergo. The displaced structure, therefore, is the influence line for the

reaction at A. This principle is known as the Müller-Breslau principle and may be extended to any structure for which the principle of superposition applies.

When using STRUDL to develop influence lines, it is sufficient to specify a MEMBER DISTORTIONS loading consisting of a unit displacement of rotation at the point of interest. It is possible, therefore, in one single run to determine as many influence lines as desired by specifying that many different loading conditions.

To illustrate this capability, the same frame that we used in problem 3.7 is used in this example (see Fig. 3.9b).

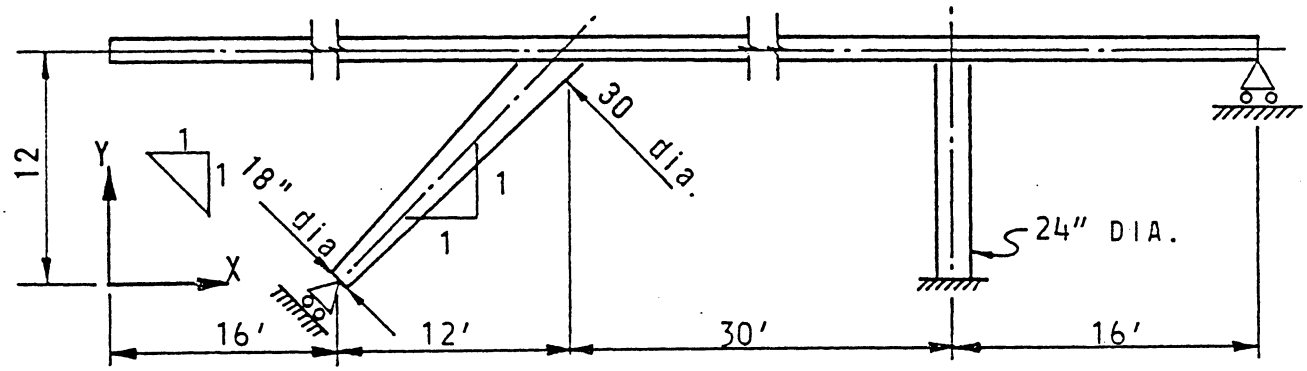

Fig. 3.9b

Because STRUDL gives displacements at the joints only, it is necessary to model the structure as several short members so that enough displacements will be known to create a meaningful influence diagram. The columns and cantilevered span have been arbitrarily divided into five sections while the remaining two spans are divided into ten sections each. Notice that any convenient number or spacing of sections may be selected. The joint spacing need not be at equal spacing. Additional joints may be placed in critical areas or the spacing may be selected to correspond to some axle spacing.

The joint and member numbering for this structure is shown in Figures 3.9c below.

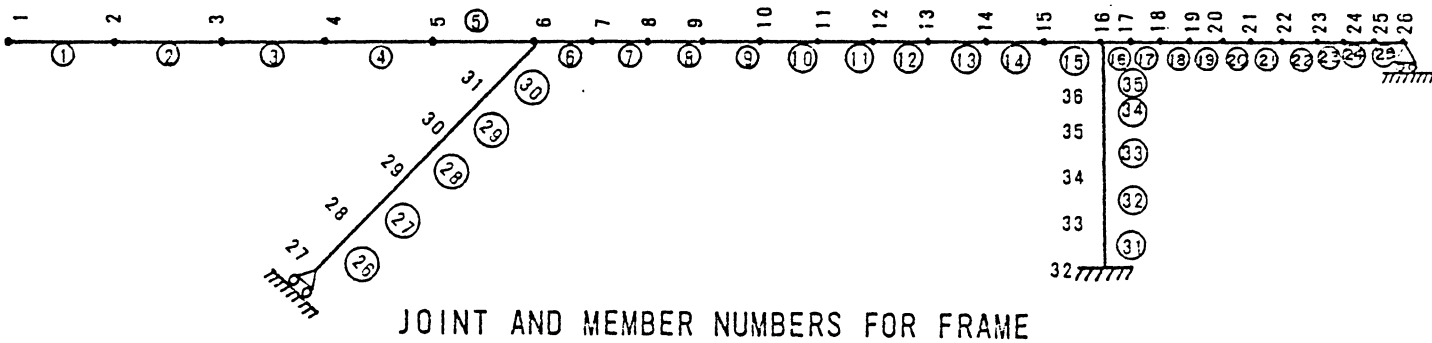

JOINT AND MEMBER NUMBERS FOR FRAME

Fig. 3.9c

The following STRUDL commands describe the structure geometry and the member properties:

STATE OF CALIFORNIA - BUSINESS AND TRANSPORTATION AGENCY - DEPARTMENT OF PUBLIC WORKS - DIVISION OF ADMINISTRATIVE SERVICES

COMPUTER SYSTEMS

ICES

ADDRESS / DIST. GROUP / BATCH: S 14T 15

SUBSYSTEM NAME | SOURCE DIST. UNIT | CHARGE DIST. UNIT | EXPENDITURE AUTHORIZATION | SPECIAL DESIGNATION WHEN APPLICABLE | SEQUENCE 0001

STRUDL 'PROB 3.9' 'INFLUENCE LINES FOR A RIGID FRAME'	10
TYPE PLANE FRAME	20
UNITS FEET DEGREES	30
JOINT COORDINATES	40
1 0.0 12.0	50
2 5.6 12.0	60
3 11.2 12.0	70
4 16.8 12.0	80
5 22.4 12.0	90
6 28.0 12.0	100
7 31.0 12.0	110
8 34.0 12.0	120
9 37.0 12.0	130
10 40.0 12.0	140
11 43.0 12.0	150
12 46.0 12.0	160
13 49.0 12.0	170
14 52.0 12.0	180
15 55.0 12.0	190
16 58.0 12.0	200
17 59.6 12.0	210
18 61.2 12.0	220
19 62.8 12.0	230
20 64.4 12.0	240
21 66.0 12.0	250
22 67.6 12.0	260
23 69.2 12.0	270
24 70.8 12.0	280
25 72.4 12.0	290
26 74.0 12.0 S	300
27 16.0 0.0 S	310
28 18.4 2.4	320
29 20.8 4.8	330
30 23.2 7.2	340
31 25.6 9.6	350
32 58.0 0.0 S	360
33 58.0 2.4	370
34 58.0 4.8	380
35 58.0 7.2	390
36 58.0 9.6	400
JOINT RELEASES MOMENT Z	410
26 FORCE X	420
27 FORCE X THA 135.	430

```
MEMBER INCIDENCES
  1  1  2
  2  2  3
  3  3  4
  4  4  5
  5  5  6
  6  6  7
  7  7  8
  8  8  9
  9  9 10
 10 10 11
 11 11 12
 12 12 13
 13 13 14
 14 14 15
 15 15 16
 16 16 17
 17 17 18
 18 18 19
 19 19 20
 20 20 21
 21 21 22
 22 22 23
 23 23 24
 24 24 25
 25 25 26
 26 27 28
 27 28 29
 28 29 30
 29 30 31
 30 31  6
 31 32 33
 32 33 34
 33 34 35
 34 35 36
 35 36 16
MEMBER PROPERTIES PRISMATIC
  1 TO 25 AX 3.75  IZ 1.96
 31 TO 35 AX 3.14  IZ  .786
 26 AX 2.01 IZ .322
 27 AX 2.54 IZ .515
 28 AX 3.14 IZ .786
 29 AX 3.80 IZ 1.15
 30 AX 4.52 IZ 1.63
```

When specifying the loading conditions to develop an influence line, a MEMBER DISTORTIONS command is given. This is equivalent to imposing a permanent distortion into a member, similar to a fabrication error and then allowing the structure to deflect to a shape that will accommodate the imposed condition. For example, when determining the influence line for a moment at the end of member 10 (i.e., the middle of Span 2) the member is distorted as shown in Fig. 3.9d.

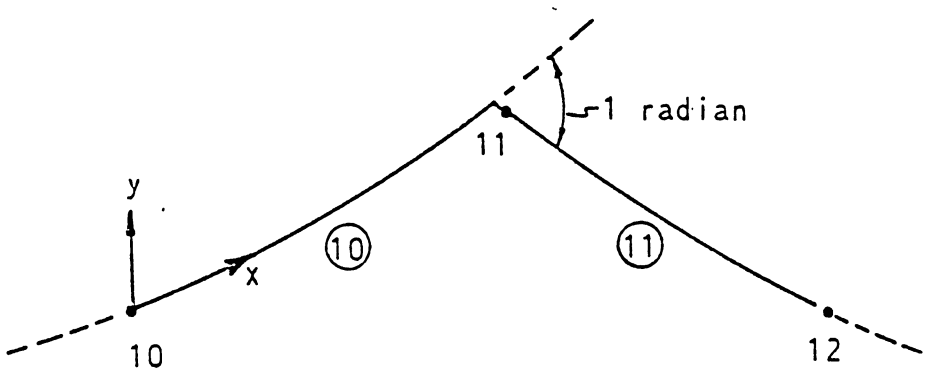

Fig. 3.9d

This is the loading condition that is given for loading 1 in our example. The coding for this loading plus loadings 2, 3 and 4 are shown below.

```
UNITS RADIANS                                                          820
LOADING 1 'INFLUENCE LINE FOR MOMENT AT CENTER OF SPAN 2'              830
MEMBER 10 DISTORTIONS CONCENTRATED FR 1.0 ROTATION Z -1.               900
LOADING 2 'INFLUENCE LINE FOR MOMENT AT CENTER OF SPAN 3'              910
MEMBER 20 DISTORTIONS CONCENTRATED FR 1.0 ROTATION Z -1.               920
LOADING 3 'INFLUENCE LINE FOR MOMENT AT THE LEFT END OF SPAN 3'        930
MEMBER 16 DISTORTIONS CONCENTRATED FR 0.0 ROTATION Z -1.               940
LOADING 4 'INFLUENCE LINE FOR MOMENT AT TOP OF SLANTED COLUMN'         950
MEMBER 30 DISTORTIONS CONCENTRATED FR 1.0 ROTATION Z -1.               960
```

We can also obtain the influence line for the axial load on the slanted column, member 30, the top end of the column, is distorted axially a unit distance as shown in Figure 3.9e.

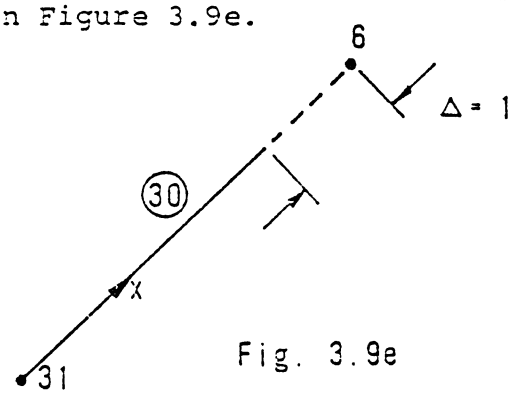

Fig. 3.9e

This is coded in Loading 5 below.

The last influence line calculated in this problem is for the shear at the right end of Span 2. Member 15 is distorted as shown in Figure 3.9f. In this case we assume that the member 15 is cut just to the left of joint 16 and that a device is inserted which will provide a permanent transverse distortion of 1 unit. It is also assumed that slope compatibility will be maintained between the two cut ends.

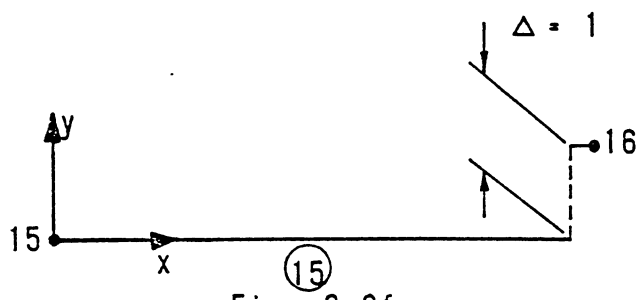

Fig. 3.9f

This loading condition is coded in Loading 6 below.

```
LOADING 5 'INFLUENCE LINE FOR AXIAL LOAD AT TOP OF SLANTED COL'  970
MEMBER 30 DISTORTIONS CONCENTRATED FR 1.0 DISPLACEMENT X 1.0     980
LOADING 6 'INFLUENCE LINE FOR SHEAR AT RIGHT END OF SPAN 2'      990
MEMBER 15 DISTORTIONS CONCENTRATED FR 1.0 DISPLACEMENTS Y 1.0    1000
LOADING LIST ALL                                                 1130
STIFFNESS ANALYSIS                                               1140
LIST REACTIONS DISPLACEMENTS                                     1150
```

Notice that when applying member distortions in the STRUDL input and interpreting the results, it is extremely important to maintain a consistent sign convention.

Following is a listing of the input commands and the STRUDL results.

```
STRUDL 'PROB 3.9' 'INFLUENCE LINES FOR A RIGID FRAME'          $ 14T 15    0010

          ********************************************
          *                                          *
          *     ICES STRUDL II      VERSION 1 MOD 1  *
          *       THE STRUCTURAL DESIGN LANGUAGE     *
          *    MASSACHUSETTS INSTITUTE OF TECHNOLOGY *
          *              STATE OF CALIFORNIA         *
          *     BRIDGE DEPARTMENT DIVISION OF HWYS.  *
          *    SPECIAL STUDIES SECTION  PH. 445-6519 *
          *     NOVEMBER 1969  INSTALLED APRIL 1970  *
          *           18:00:51       6/26/70         *
          *                                          *
          ********************************************

TYPE PLANE FRAME                                               $ 14T 15    0020

UNITS FEET DEGREES                                             $ 14T 15    0030

JOINT COORDINATES                                              $ 14T 15    0040

     1  0.0 12.0                                               $ 14T 15    0050

     2  5.6 12.0                                               $ 14T 15    0060

     3 11.2 12.0                                               $ 14T 15    0070

     4 16.8 12.0                                               $ 14T 15    0080

     5 22.4 12.0                                               $ 14T 15    0090

     6 28.0 12.0                                               $ 14T 15    0100

     7 31.0 12.0                                               $ 14T 15    0110

     8 34.0 12.0                                               $ 14T 15    0120

     9 37.0 12.0                                               $ 14T 15    0130

    10 40.0 12.0                                               $ 14T 15    0140

    11 43.0 12.0                                               $ 14T 15    0150

    12 46.0 12.0                                               $ 14T 15    0160

    13 49.0 12.0                                               $ 14T 15    0170

    14 52.0 12.0                                               $ 14T 15    0180

    15 55.0 12.0                                               $ 14T 15    0190

    16 58.0 12.0                                               $ 14T 15    0200

    17 59.6 12.0                                               $ 14T 15    0210

    18 61.2 12.0                                               $ 14T 15    0220

    19 62.8 12.0                                               $ 14T 15    0230

    20 64.4 12.0                                               $ 14T 15    0240

    21 66.0 12.0                                               $ 14T 15    0250

    22 67.6 12.0                                               $ 14T 15    0260

    23 69.2 12.0                                               $ 14T 15    0270

    24 70.8 12.0                                               $ 14T 15    0280

    25 72.4 12.0                                               $ 14T 15    0290

    26 74.0 12.0 S                                             $ 14T 15    0300
```

```
    27 16.0  0.0 S                                  $ 14T 15    0310
    28 18.4  2.4                                    $ 14T 15    0320
    29 20.8  4.8                                    $ 14T 15    0330
    30 23.2  7.2                                    $ 14T 15    0340
    31 25.6  9.6                                    $ 14T 15    0350
    32 58.0  0.0 S                                  $ 14T 15    0360
    33 58.0  2.4                                    $ 14T 15    0370
    34 58.0  4.8                                    $ 14T 15    0380
    35 58.0  7.2                                    $ 14T 15    0390
    36 58.0  9.6                                    $ 14T 15    0400
JOINT RELEASES MOMENT Z                             $ 14T 15    0410
    26 FORCE X                                      $ 14T 15    0420
    27 FORCE X TH1 135.                             $ 14T 15    0430
MEMBER INCIDENCES                                   $ 14T 15    0440
     1  1  2                                        $ 14T 15    0450
     2  2  3                                        $ 14T 15    0460
     3  3  4                                        $ 14T 15    0470
     4  4  5                                        $ 14T 15    0480
     5  5  6                                        $ 14T 15    0490
     6  6  7                                        $ 14T 15    0500
     7  7  8                                        $ 14T 15    0510
     8  8  9                                        $ 14T 15    0520
     9  9 10                                        $ 14T 15    0530
    10 10 11                                        $ 14T 15    0540
    11 11 12                                        $ 14T 15    0550
    12 12 13                                        $ 14T 15    0560
    13 13 14                                        $ 14T 15    0570
    14 14 15                                        $ 14T 15    0580
    15 15 16                                        $ 14T 15    0590
    16 16 17                                        $ 14T 15    0600
    17 17 18                                        $ 14T 15    0610
    18 18 19                                        $ 14T 15    0620
    19 19 20                                        $ 14T 15    0630
    20 20 21                                        $ 14T 15    0640
    21 21 22                                        $ 14T 15    0650
    22 22 23                                        $ 14T 15    0660
    23 23 24                                        $ 14T 15    0670
```

```
    24 24 25                                                    $ 14T 15    0680
    25 25 26                                                    $ 14T 15    0690
    26 27 28                                                    $ 14T 15    0700
    27 28 29                                                    $ 14T 15    0710
    28 29 30                                                    $ 14T 15    0720
    29 30 31                                                    $ 14T 15    0730
    30 31  6                                                    $ 14T 15    0740
    31 32 33                                                    $ 14T 15    0750
    32 33 34                                                    $ 14T 15    0760
    33 34 35                                                    $ 14T 15    0770
    34 35 36                                                    $ 14T 15    0780
    35 36 16                                                    $ 14T 15    0790
MEMBER PROPERTIES PRISMATIC                                     $ 14T 15    0800
     1 TO 25 AX 3.75  IZ 1.96                                   $ 14T 15    0810
    31 TO 35 AX 3.14  IZ  .786                                  $ 14T 15    0820
    26 AX 2.01 IZ .322                                          $ 14T 15    0830
    27 AX 2.54 IZ .515                                          $ 14T 15    0840
    28 AX 3.14 IZ .786                                          $ 14T 15    0850
    29 AX 3.80 IZ 1.15                                          $ 14T 15    0860
    30 AX 4.52 IZ 1.63                                          $ 14T 15    0870
UNITS RADIANS                                                   $ 14T 15    0880
LOADING 1 'INFLUENCE LINE FOR MOMENT AT CENTER OF SPAN 2'       $ 14T 15    0890
MEMBER 10 DISTORTIONS CONCENTRATED FR 1.0 ROTATION Z -1.        $ 14T 15    0900
LOADING 2 'INFLUENCE LINE FOR MOMENT AT CENTER OF SPAN 3'       $ 14T 15    0910
MEMBER 20 DISTORTIONS CONCENTRATED FR 1.0 ROTATION Z -1.        $ 14T 15    0920
LOADING 3 'INFLUENCE LINE FOR MOMENT AT THE LEFT END OF SPAN 3' $ 14T 15    0930
MEMBER 16 DISTORTIONS CONCENTRATED FR 0.0 ROTATION Z -1.        $ 14T 15    0940
LOADING 4 'INFLUENCE LINE FOR MOMENT AT TOP OF SLANTED COLUMN'  $ 14T 15    0950
MEMBER 30 DISTORTIONS CONCENTRATED FR 1.0 ROTATION Z -1.        $ 14T 15    0960
LOADING 5 'INFLUENCE LINE FOR AXIAL LOAD AT TOP OF SLANTED COL' $ 14T 15    0970
MEMBER 30 DISTORTIONS CONCENTRATED FR 1.0 DISPLACEMENT X 1.0    $ 14T 15    0980
LOADING 6 'INFLUENCE LINE FOR SHEAR AT RIGHT END OF SPAN 2'     $ 14T 15    0990
MEMBER 15 DISTORTIONS CONCENTRATED FR 1.0 DISPLACEMENT Y 1.0    $ 14T 15    1000
LOADING LIST ALL                                                $ 14T 15    1130
STIFFNESS ANALYSIS                                              $ 14T 15    1140
LIST REACTIONS DISPLACEMENTS                                    $ 14T 15    1150
```

```
****************************
*RESULTS OF LATEST ANALYSES*
****************************
```

PROBLEM - PROB 3.9 TITLE - INFLUENCE LINES FOR A RIGID FRAME

ACTIVE UNITS FEET LB RAD DEGF SEC

ACTIVE STRUCTURE TYPE PLANE FRAME

ACTIVE COORDINATE AXES X Y

LOADING - 1 INFLUENCE LINE FOR MOMENT AT CENTER OF SPAN 2

RESULTANT JOINT LOADS - SUPPORTS

JOINT	FORCE X FORCE	FORCE Y FORCE	FORCE Z FORCE	MOMENT X MOMENT	MOMENT Y MOMENT	MOMENT Z MOMENT
26	0.0000000	0.5268088				-0.0000000
27	0.2762174	0.2762169				-0.0000004
32	-0.2762174	-0.8030257				3.1721659

RESULTANT JOINT DISPLACEMENTS - SUPPORTS

JOINT	DISPLACEMENT X DISP.	DISPLACEMENT Y DISP.	DISPLACEMENT Z DISP.	ROTATION X ROT.	ROTATION Y ROT.	ROTATION Z ROT.
26	1.3150749	0.0				0.0783064
27	6.1293898	-6.1293893				0.3989954
32	0.0	0.0				0.0

RESULTANT JOINT DISPLACEMENTS - FREE JOINTS

JOINT	DISPLACEMENT X DISP.	DISPLACEMENT Y DISP.	DISPLACEMENT Z DISP.	ROTATION X ROT.	ROTATION Y ROT.	ROTATION Z ROT.
1	1.3304195	-12.5243378				0.3989947
2	1.3304195	-10.2399685				0.3989947
3	1.3304195	-8.0555993				0.3989947
4	1.3304195	-5.8212337				0.3989947
5	1.3304195	-3.5868654				0.3989947
6	1.3304195	-1.3524995				0.3989947
7	1.3299451	-0.1511022				0.4033996
8	1.3273506	1.0767038				0.4146104
9	1.3258162	2.3573675				0.4384302
10	1.3242417	3.7172966				0.4694579
11	1.3227672	5.1829224				-0.4909064
12	1.3212118	3.7806664				-0.4424627
13	1.3196774	2.5363549				-0.3852112
14	1.3181429	1.4782095				-0.3191517
15	1.3166244	0.6363532				-0.2442943
16	1.3150749	0.0213117				-0.1604089
17	1.3150749	-0.1987074				-0.1152156
18	1.3150749	-0.3499246				-0.0745995
19	1.3150749	-0.4393762				-0.0387423
20	1.3150749	-0.4765115				-0.0077033
21	1.3150749	-0.4471749				0.0185774
22	1.3150749	-0.4196126				0.0400797
23	1.3150749	-0.3414677				0.0569040
24	1.3150749	-0.2403877				0.0687498
25	1.3150749	-0.1240174				0.0759172
28	5.1645619	-5.1759526				0.3989953
29	4.2084093	-4.2203289				0.3989952
30	3.2447478	-3.2645140				0.3989950
31	2.2894468	-2.3086452				0.3989948
33	0.0750938	0.0042623				-0.0602355
34	0.2778346	0.0085247				-0.1064141
35	0.5746350	0.0127870				-0.1385359
36	0.9314112	0.0170494				-0.1566008

LOADING - 2 INFLUENCE LINE FOR MOMENT AT CENTER OF SPAN 3

RESULTANT JOINT LOADS - SUPPORTS

JOINT	FORCE X FORCE	FORCE Y FORCE	FORCE Z FORCE	MOMENT X MOMENT	MOMENT Y MOMENT	MOMENT Z MOMENT
26	-0.0000000	0.7857692				0.0000000
27	0.2809660	0.2809655				-0.0000004
32	-0.2809660	-1.0667343				-0.7725946

RESULTANT JOINT DISPLACEMENTS - SUPPORTS

JOINT	DISPLACEMENT X DISP.	DISPLACEMENT Y DISP.	DISPLACEMENT Z DISP.	ROTATION X ROT.	ROTATION Y ROT.	ROTATION Z ROT.
26	-1.2063971	0.0				-0.3829796
27	-3.4274511	3.4274569				-0.1873232
32	0.0	0.0				0.0

RESULTANT JOINT DISPLACEMENTS - FREE JOINTS

JOINT	DISPLACEMENT X DISP.	Y DISP.	Z DISP.	ROTATION X ROT.	Y ROT.	Z ROT.
1	-1.1907893	6.4134264				-0.1973239
2	-1.1907883	5.3644123				-0.1873239
3	-1.1907883	4.3153992				-0.1973239
4	-1.1907893	3.2463870				-0.1973239
5	-1.1907883	2.2173729				-0.1873239
6	-1.1907883	1.1683549				-0.1973239
7	-1.1923494	0.6109649				-0.1828443
8	-1.1939096	0.0802506				-0.1694053
9	-1.1954708	-0.3966078				-0.1470070
10	-1.1970320	-0.7928320				-0.1156493
11	-1.1985931	-1.0815439				-0.0753322
12	-1.2001534	-1.2358656				-0.0260559
13	-1.2017145	-1.2289190				0.0321800
14	-1.2032757	-1.0338268				0.0993751
15	-1.2048368	-0.6237095				0.1755297
16	-1.2063971	0.0283103				0.2606435
17	-1.2063971	0.5004523				0.3283553
18	-1.2063971	1.0752449				0.3889416
19	-1.2063971	1.7412663				0.4423999
20	-1.2063971	2.4871197				0.4887311
21	-1.2063971	3.3014069				-0.4720691
22	-1.2063971	2.5727158				-0.4399973
23	-1.2063971	1.8896198				-0.4150519
24	-1.2063971	1.2407436				-0.3972341
25	-1.2063971	0.6146742				-0.3865433
28	-2.9811707	2.9745874				-0.1873233
29	-2.5342016	2.5224066				-0.1873235
30	-2.0867338	2.0707197				-0.1873236
31	-1.6388998	1.6194029				-0.1973235
33	-0.0253792	0.0056621				0.0235317
34	-0.1243906	0.0113241				0.0613619
35	-0.3313538	0.0169862				0.1134905
36	-0.6805838	0.0226483				0.1799179

LOADING - 3 INFLUENCE LINE FOR MOMENT AT THE LEFT END OF SPAN 3

RESULTANT JOINT LOADS - SUPPORTS

JOINT	FORCE X FORCE	Y FORCE	Z FORCE	MOMENT X MOMENT	Y MOMENT	Z MOMENT
26	-0.0000000	1.5716677				-0.0000000
27	0.5619222	0.5619212				-0.0000008
32	-0.5619222	-2.1335888				-1.5451612

RESULTANT JOINT DISPLACEMENTS - SUPPORTS

JOINT	DISPLACEMENT X DISP.	Y DISP.	Z DISP.	ROTATION X ROT.	Y ROT.	Z ROT.
26	-2.4127531	0.0				0.2340524
27	-6.8547821	6.8547955				-0.3746397
32	0.0	0.0				0.0

RESULTANT JOINT DISPLACEMENTS - FREE JOINTS

JOINT	DISPLACEMENT X DISP.	Y DISP.	Z DISP.	ROTATION X ROT.	Y ROT.	Z ROT.
1	-2.3815346	12.8266249				-0.3746412
2	-2.3815346	10.7286348				-0.3746412
3	-2.3815346	8.6306448				-0.3746412
4	-2.3815346	6.5326586				-0.3746412
5	-2.3815346	4.4346695				-0.3746412
6	-2.3815346	2.3366728				-0.3746412
7	-2.3846569	1.2217093				-0.3656821
8	-2.3877793	0.1604997				-0.3388047
9	-2.3908997	-0.7931998				-0.2940087
10	-2.3940220	-1.5856323				-0.2312945
11	-2.3971434	-2.1630468				-0.1506617
12	-2.4002666	-2.4716854				-0.0521106
13	-2.4033880	-2.4577923				0.0643589
14	-2.4065094	-2.0676136				0.1987469
15	-2.4096317	-1.2473927				0.3510532
16	-2.4127531	0.0566239				0.5212780
17	-2.4127531	-0.5990790				-0.3432967
18	-2.4127531	-1.0495186				-0.2221237
19	-2.4127531	-1.3174829				-0.1152077
20	-2.4127531	-1.4257951				-0.0225472
21	-2.4127531	-1.3972349				0.0458538
22	-2.4127531	-1.2545434				0.1200076
23	-2.4127531	-1.0208130				0.1699024
24	-2.4127531	-0.7135582				0.2255412
25	-2.4127531	-0.3706859				0.2269245
28	-5.9622364	5.9490719				-0.3746399
29	-5.0583146	5.0447245				-0.3746403
30	-4.1733952	4.1413670				-0.3746406
31	-3.2777443	3.2387505				-0.3746409
33	-0.0507556	0.0113248				0.0470625
34	-0.2437771	0.0226495				0.1227216
35	-0.6626962	0.0339743				0.2269772
36	-1.3611431	0.0452991				0.3598292

LOADING - 4 INFLUENCE LINE FOR MOMENT AT TOP OF SLANTED COLUMN

RESULTANT JOINT LOADS - SUPPORTS

JOINT	FORCE			MOMENT		
	X FORCE	Y FORCE	Z FORCE	X MOMENT	Y MOMENT	Z MOMENT
26	-0.0000000	0.0000045				0.0000000
27	0.0000085	0.0000085				-0.0000000
32	-0.0000085	-0.0000130				0.0000642

RESULTANT JOINT DISPLACEMENTS - SUPPORTS

JOINT	DISPLACEMENT			ROTATION		
	X DISP.	Y DISP.	Z DISP.	X ROT.	Y ROT.	Z ROT.
26	0.0000191	0.0				0.0000007
27	12.0001554	-12.0001783				1.0000114
32	0.0	0.0				0.0

RESULTANT JOINT DISPLACEMENTS - FREE JOINTS

JOINT	DISPLACEMENT			ROTATION		
	X DISP.	Y DISP.	Z DISP.	X ROT.	Y ROT.	Z ROT.
1	0.0000195	-0.0002879				0.0000088
2	0.0000195	-0.0002388				0.0000098
3	0.0000195	-0.0001897				0.0000098
4	0.0000195	-0.0001406				0.0000099
5	0.0000195	-0.0000916				0.0000099
6	0.0000195	-0.0000425				0.0000088
7	0.0000195	-0.0000196				0.0000065
8	0.0000195	-0.0000041				0.0000046
9	0.0000194	0.0000080				0.0000029
10	0.0000194	0.0000144				0.0000014
11	0.0000193	0.0000169				0.0000003
12	0.0000193	0.0000164				-0.0000006
13	0.0000192	0.0000137				-0.0000012
14	0.0000192	0.0000096				-0.0000015
15	0.0000191	0.0000048				-0.0000016
16	0.0000191	0.0000003				-0.0000014
17	0.0000191	-0.0000015				-0.0000010
18	0.0000191	-0.0000028				-0.0000006
19	0.0000191	-0.0000036				-0.0000003
20	0.0000191	-0.0000039				-0.0000001
21	0.0000191	-0.0000039				0.0000001
22	0.0000191	-0.0000035				0.0000003
23	0.0000191	-0.0000028				0.0000005
24	0.0000191	-0.0000020				0.0000006
25	0.0000191	-0.0000010				0.0000006
26	9.6001291	-9.6001558				1.0000114
29	7.2000999	-7.2001343				1.0000114
30	4.8000717	-4.8001022				1.0000114
31	2.4000435	-2.4000893				1.0000114
33	0.0000015	0.0000001				-0.0000011
34	0.0000051	0.0000001				-0.0000019
35	0.0000100	0.0000002				-0.0000021
36	0.0000150	0.0000003				-0.0000020

LOADING - 5 INFLUENCE LINE FOR AXIAL LOAD AT TOP OF SLANTED COL

RESULTANT JOINT LOADS - SUPPORTS

JOINT	FORCE			MOMENT		
	X FORCE	Y FORCE	Z FORCE	X MOMENT	Y MOMENT	Z MOMENT
26	0.0000000	0.0496721				-0.0000000
27	0.0260488	0.0260488				-0.0000000
32	-0.0260488	-0.0757208				0.2991273

RESULTANT JOINT DISPLACEMENTS - SUPPORTS

JOINT	DISPLACEMENT			ROTATION		
	X DISP.	Y DISP.	Z DISP.	X ROT.	Y ROT.	Z ROT.
26	0.1240025	0.0				0.0073834
27	-1.2604828	1.2604847				-0.0566550
32	0.0	0.0				0.0

RESULTANT JOINT DISPLACEMENTS - FREE JOINTS

JOINT	DISPLACEMENT X DISP.	DISPLACEMENT Y DISP.	DISPLACEMENT Z DISP.	ROTATION X ROT.	ROTATION Y ROT.	ROTATION Z ROT.
1	0.1254496	2.3730936				-0.0566575
2	0.1254496	2.5558128				-0.0566575
3	0.1254496	2.2385311				-0.0566575
4	0.1254496	1.9212494				-0.0566575
5	0.1254496	1.6039677				-0.0566575
6	0.1254496	1.2866850				-0.0566575
7	0.1253049	1.1171246				-0.0562440
8	0.1251602	0.9500521				-0.0549998
9	0.1250155	0.7879572				-0.0529250
10	0.1248708	0.6333326				-0.0500196
11	0.1247261	0.4886703				-0.0462835
12	0.1245813	0.3564621				-0.0417168
13	0.1244366	0.2392001				-0.0363195
14	0.1242919	0.1393760				-0.0300915
15	0.1241472	0.0594819				-0.0230329
16	0.1240025	0.0020096				-0.0151436
17	0.1240025	-0.0187357				-0.0108635
18	0.1240025	-0.0329937				-0.0070339
19	0.1240025	-0.0414847				-0.0036549
20	0.1240025	-0.0449295				-0.0007263
21	0.1240025	-0.0440492				0.0017517
22	0.1240025	-0.0395646				0.0037791
23	0.1240025	-0.0321965				0.0053560
24	0.1240025	-0.0226658				0.0064823
25	0.1240025	-0.0116934				0.0071581
28	-1.1248159	1.1242075				-0.0566550
29	-0.9890864	0.9879950				-0.0566550
30	-0.8533098	0.8518271				-0.0566551
31	-0.7174993	0.7156944				-0.0566551
33	0.0070811	0.0004019				-0.0056800
34	0.0262035	0.0008038				-0.0100344
35	0.0541855	0.0012057				-0.0130631
36	0.0878456	0.0016077				-0.0147662

LOADING - 6 INFLUENCE LINE FOR SHEAR AT RIGHT END OF SPAN 2

RESULTANT JOINT LOADS - SUPPORTS

JOINT	FORCE X FORCE	FORCE Y FORCE	FORCE Z FORCE	MOMENT X MOMENT	MOMENT Y MOMENT	MOMENT Z MOMENT
26	0.0000000	0.0351206				-0.0000000
27	0.0184145	0.0184145				-0.0000000
32	-0.0184145	-0.0535351				0.2114781

RESULTANT JOINT DISPLACEMENTS - SUPPORTS

JOINT	DISPLACEMENT X DISP.	DISPLACEMENT Y DISP.	DISPLACEMENT Z DISP.	ROTATION X ROT.	ROTATION Y ROT.	ROTATION Z ROT.
26	0.0876717	0.0				0.0052204
27	-0.3913744	0.3913751				-0.0400670
32	0.0	0.0				0.0

RESULTANT JOINT DISPLACEMENTS - FREE JOINTS

JOINT	DISPLACEMENT X DISP.	DISPLACEMENT Y DISP.	DISPLACEMENT Z DISP.	ROTATION X ROT.	ROTATION Y ROT.	ROTATION Z ROT.
1	0.0886948	1.0317125				-0.0400671
2	0.0886948	0.8073377				-0.0400671
3	0.0886948	0.5829620				-0.0400671
4	0.0886943	0.3585269				-0.0400671
5	0.0886948	0.1342115				-0.0400671
6	0.0886948	-0.0901646				-0.0400671
7	0.0885924	-0.2100722				-0.0397735
8	0.0884901	-0.3282182				-0.0388927
9	0.0883378	-0.4429411				-0.0374247
10	0.0882854	-0.5521792				-0.0353695
11	0.0881332	-0.6544710				-0.0327271
12	0.0880809	-0.7479548				-0.0294976
13	0.0879786	-0.8304691				-0.0255808
14	0.0878763	-0.9014523				-0.0212768
15	0.0877740	-0.9579427				-0.0162856
16	0.0876717	0.0014208				-0.0107073
17	0.0876717	-0.0132472				-0.0076811
18	0.0876717	-0.0233283				-0.0049733
19	0.0876717	-0.0293318				-0.0025842
20	0.0876717	-0.0317675				-0.0005136
21	0.0876717	-0.0311450				0.0012335
22	0.0876717	-0.0279742				0.0026720
23	0.0876717	-0.0227645				0.0037269
24	0.0876717	-0.0160259				0.0045833
25	0.0876717	-0.0082678				0.0050612
28	-0.2954295	0.2949995				-0.0400670
29	-0.1994395	0.1986670				-0.0400670
30	-0.1034164	0.1023678				-0.0400671
31	-0.0073702	0.0060933				-0.0400671
33	0.0050063	0.0002842				-0.0040157
34	0.0195257	0.0005683				-0.0070943
35	0.0343091	0.0008525				-0.0092357
36	0.0621075	0.0011366				-0.0104401

The joint displacements which are given in the STRUDL output can be plotted to give the influence diagrams. To illustrate the flexibility of the STRUDL output, three plots of the influence line coefficients for moment at the center of Span 2 (loading 1) are shown in Figure 3.9h. In all of these plots the coefficients are given for a normal load applied to the horizontal girders and the vertical column. In the case of the slanted column, however, the coefficients are given for three different types of loads. In the first plot the coefficients for a horizontal load on the slanted column is given. Notice that this is simply the horizontal displacement of the joints on the column. The coefficients for vertical loads and normal loads are shown in the second and third plots respectively. These coefficients are found by taking the vertical and normal joint displacements of the column. Notice that in general the coefficients for any load including applied moments are given by the joint displacements in the direction of that load.

To illustrate the use of these influence coefficient diagrams, consider the loading condition shown in Figure 3.9g.

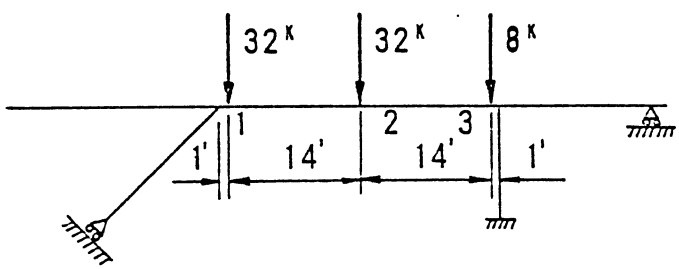

Fig. 3.9g

In order to determine the moment at the center of Span 2 due to this loading condition, obtain the coefficients under each of the applied loads (see Figure 3.9h). The values of these coefficients are as follows: d_1 = 11.4 in.; d_2 = 62.2 in.; and d_3 = 2.9 in. The moment is then given by the sum of the products of the loads and their respective coefficients.

$$M = 32(-11.4) + 32(62.2) + 8(2.9) = 1648.8 \text{ k-in.}$$

If the applied load were a uniform load of magnitude "w", then the moment would be the product of "w" and the area under the influence diagram. This area may be found by using numerical integration.

The influence coefficients for a moment at the center of Span 3 (loading 2) are shown in Figure 3.9i. The coefficients in this diagram are for loads applied normal to the members.

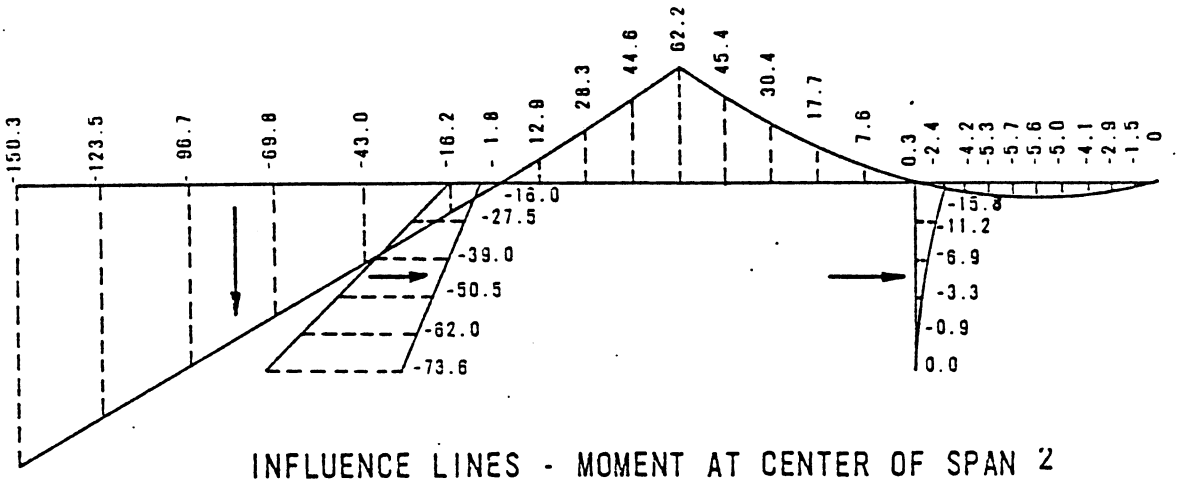

INFLUENCE LINES - MOMENT AT CENTER OF SPAN 2

(HORIZONTAL LOADS ON SLANTED COLUMNS)

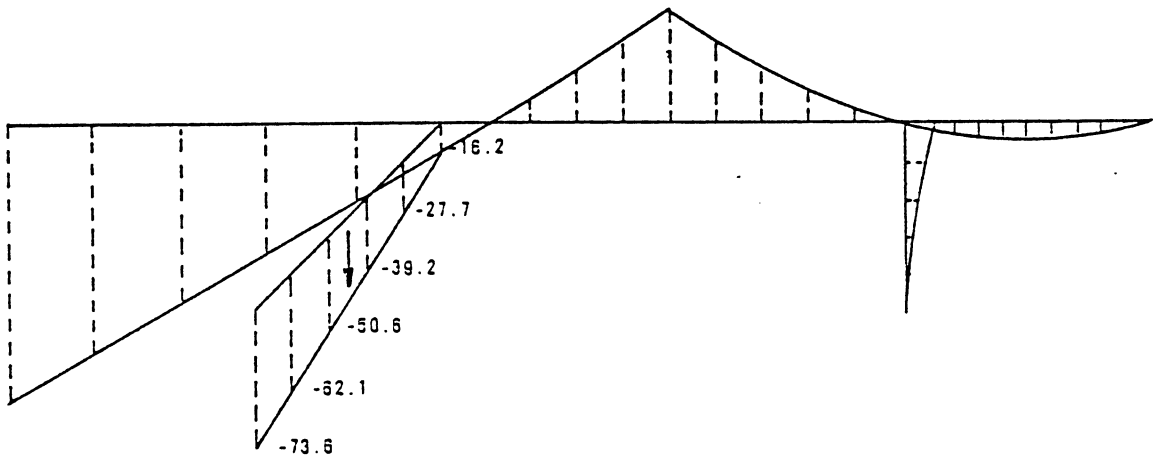

INFLUENCE LINES - MOMENT AT CENTER OF SPAN 2

(VERTICAL LOADS ON SLANTED COLUMNS)

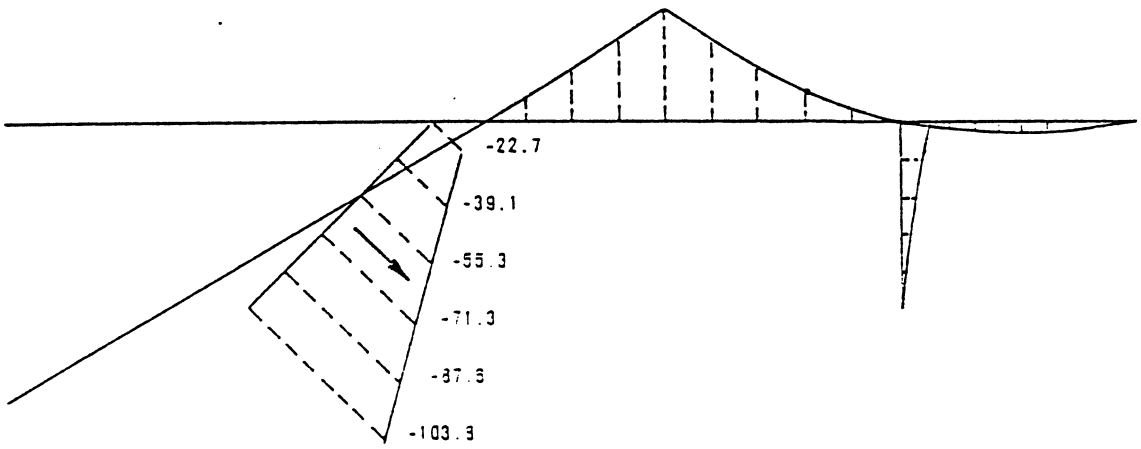

INFLUENCE LINES - MOMENT AT CENTER OF SPAN 2

(NORMAL LOADS ON SLANTED COLUMNS)

Fig. 3.9h

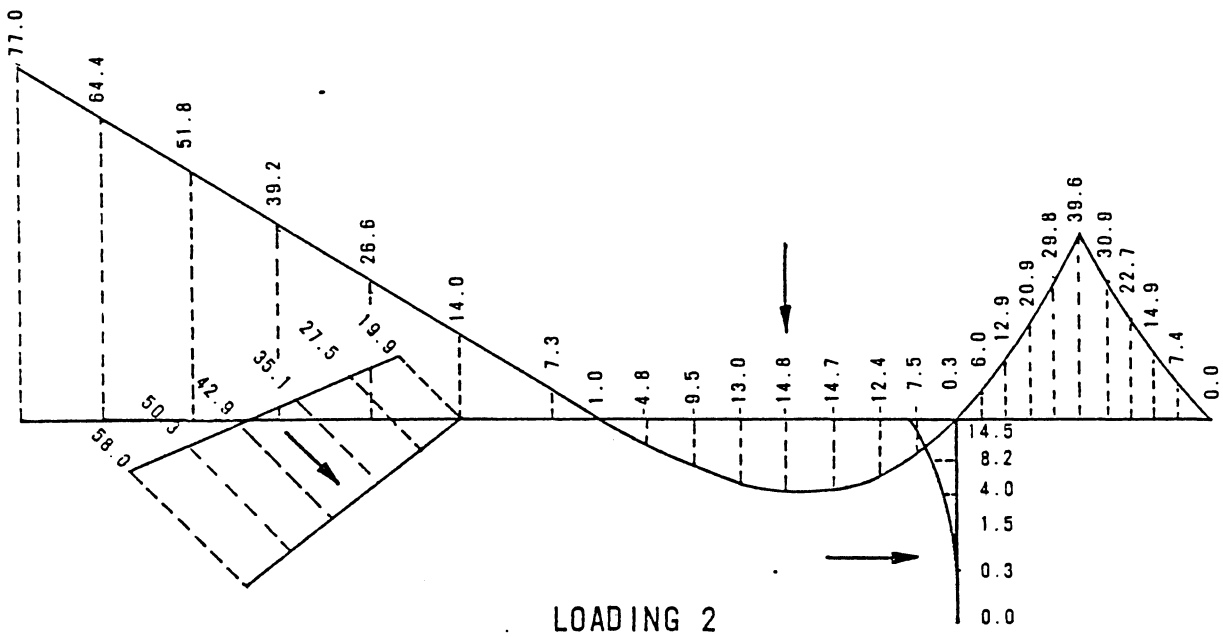

LOADING 2

INFLUENCE LINES - MOMENT IN CENTER OF SPAN 3

Fig. 3.9i

3.10 Example Plane Frame Problem

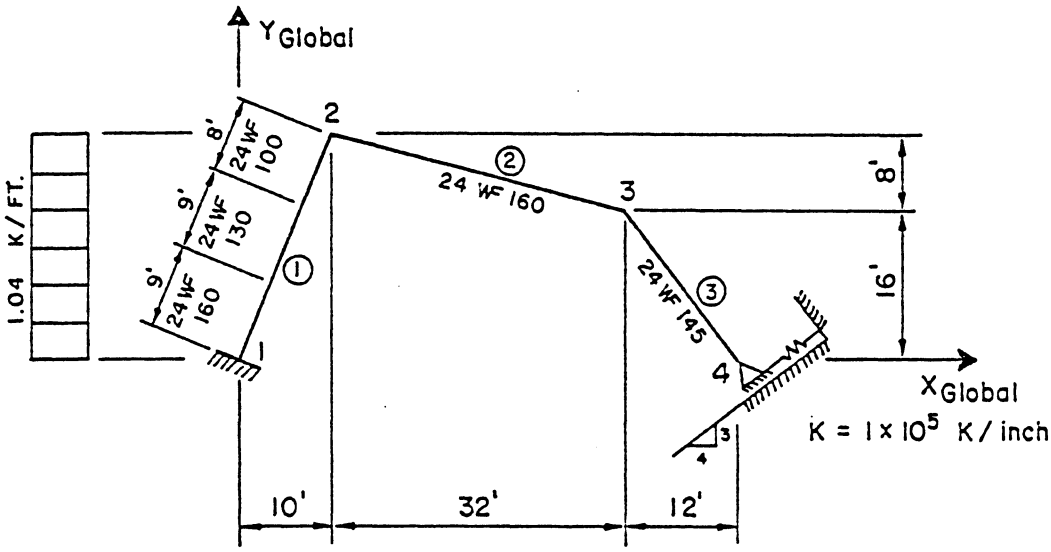

Use STRUDL to determine the forces, reactions, and displacements in the structure shown above for the following loading conditions:

1. Dead Load

2. Wind Load, 1.04 k/ft, acting on Member 1 as shown.

3. A temperature differential developing in Member 2, the top fiber temperature increasing by 40° F while the bottom fiber temperature increases by 20° F. (Use a temperature expansion coefficient of 0.000 0065)

4. Support settlement at Joint 1.

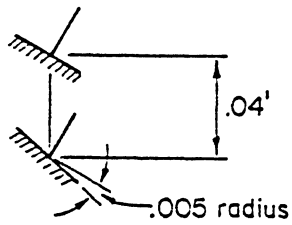

Also, determine the section forces at the 0.2 point of Member 2 for a combination of all loading conditions.

Use the indicated member and joint numbering and a Young's Modulus of 30,000 ksi.

The ICES/STRUDL coding for this problem is as follows:

```
STRUDL 'PROB3.IO' 'EXAMPLE PLANE FRAME PROBLEM'                    $ 14T 60   0010
TYPE PLANE FRAME                                                   $ 14T 60   0020
UNITS FEET KIPS                                                    $ 14T 60   0030
JOINT COORDINATES                                                  $ 14T 60   0040
     1              SUPPORT                                        $ 14T 60   0050
     2    10.  24.                                                 $ 14T 60   0060
     3    42.  16.                                                 $ 14T 60   0070
     4    54.        SUPPORT                                       $ 14T 60   0080
MEMBER INCIDENCES                                                  $ 14T 60   0081
     1    1    2                                                   $ 14T 60   0082
     2    2    3                                                   $ 14T 60   0083
     3    3    4                                                   $ 14T 60   0084
MEMBER PROPERTIES                                                  $ 14T 60   0090
     1 VARIABLE                                                    $ 14T 60   0100
          SEGMENT 1 TABLE 'STEELWF' '24WF160' LENGTH 9.0           $ 14T 60   0110
          SEGMENT 2 TABLE 'STEELWF' '24WF130' LENGTH 9.0           $ 14T 60   0120
          SEGMENT 3 TABLE 'STEELWF' '24WF100' LENGTH 8.0           $ 14T 60   0130
     2 TABLE 'STEELWF' '24WF160'                                   $ 14T 60   0140
     3 TABLE 'STEELWF' '24WF145'                                   $ 14T 60   0150
UNITS INCHES DEGREES                                               $ 14T 60   0160
JOINT 4 RELEASE MOMENT Z TH1 36.8533 KFX 1.E5                      $ 14T 60   0170
CONSTANTS E 3.E4 ALL                                               $ 14T 60   0180
          CTE 6.5E-6 ALL                                           $ 14T 60   0190
UNITS FEET POUNDS RADIANS                                          $ 14T 60   0200
LOADING 1 'DEADLOAD'                                               $ 14T 60   0210
     MEMBER LOADS FORCE Y GLOBAL                                   $ 14T 60   0220
          1 UNIFORM W -160. LA  0. LB  9.                          $ 14T 60   0230
          1 UNIFORM W -130. LA  9. LB 18.                          $ 14T 60   0240
          1 UNIFORM W -100. LA 18. LB 26.                          $ 14T 60   0250
          2 UNIFORM W -160.                                        $ 14T 60   0260
          3 UNIFORM W -145.                                        $ 14T 60   0270
```

```
LOADING 2 'WINDLOAD'                                          $ 14T 60    0280
     MEMBER 1 LOAD FORCE X GLOBAL PROJECTED UNIFORM W  1040.  $ 14T 60    0290
LOADING 3 'LEFT SUPPORT SETTLEMENT AND ROTATION'              $ 14T 60    0300
     JOINT 1 DISPLACEMENT DISPLACEMENT Y -.04 ROTATION Z -.005 $ 14T 60   0310
LOADING 4 'TEMPERATURE LOADING'                               $ 14T 60    0320
     MEMBER 2 TEMPERATURE LOADS AXIAL 30. BENDING Z -20.      $ 14T 60    0330
LOADING COMBINATION 5  COMBINE 1 1. 2 1. 3 1. 4 1.            $ 14T 60    0335
LOAD LIST ALL                                                 $ 14T 60    0360
UNITS KIPS                                                    $ 14T 60    0365
PRINT DATA                                                    $ 14T 60    0370
STIFFNESS ANALYSIS                                            $ 14T 60    0380
OUTPUT DECIMAL 4                                              $ 14T 60    0390
LIST FORCES REACTIONS DISPLACEMENTS                           $ 14T 60    0410
LOAD LIST 5                                                   $ 14T 60    0420
LIST SECTION FORCES MEMBER 2 SECTION FRACTIONAL NS 1  0.2     $ 14T 60    0430
```

3.11 EXAMPLE PLANE FRAME PROBLEM

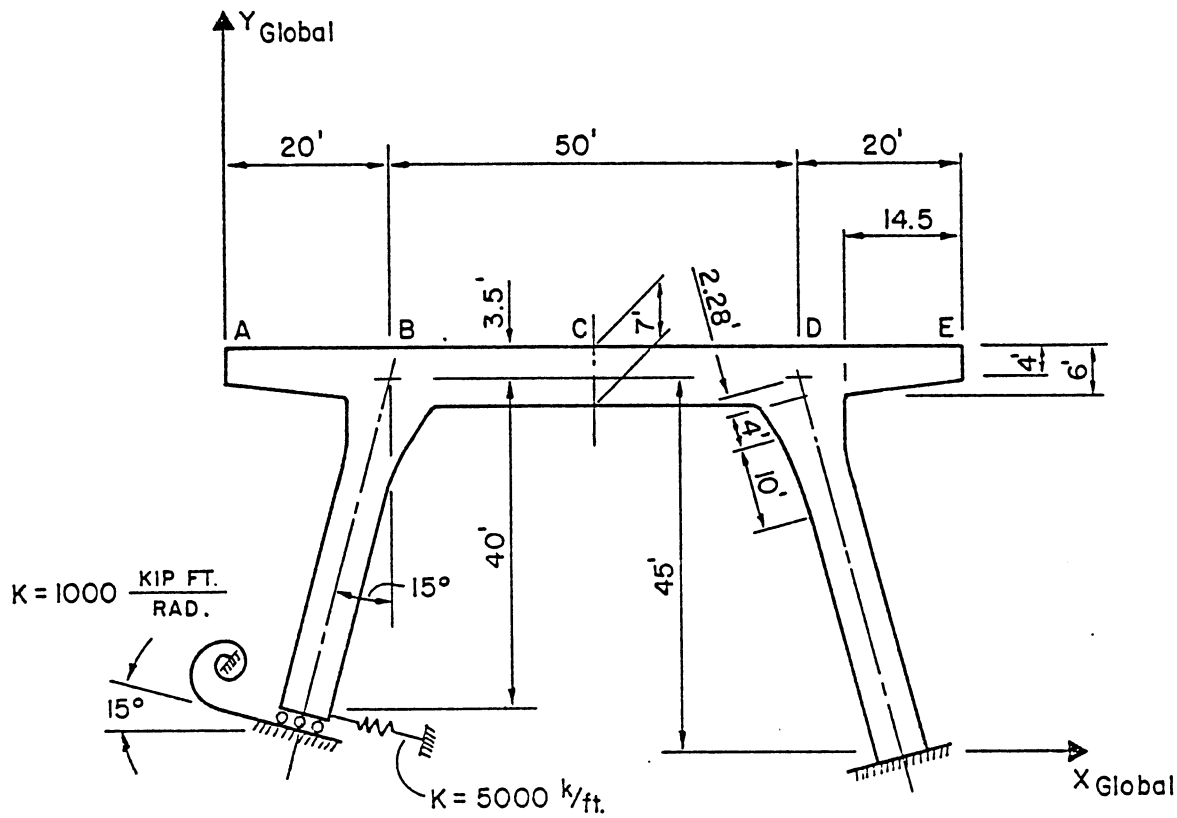

Using the Muller-Breslau Principle, obtain the influence line ordinates at the 0.5 points in the cantilevered end caps, and at the 0.1 points of the interior cap member, for the following:

1. Moment in the cap member at Point C, the centerline of the bent;
2. Moment in the interior cap member at Point B, just to the right of the column centerline;
3. Shear in the interior cap member at Point B, just to the right of the column centerline;
4. Axial load on the top of the right column.

The columns shown are the Standard Architectural Columns, Type 5A. Section properties for these columns are stored in the STRUDL TABLE, 'STDBRCOL'. The section locations and names are shown on the attached diagram.

Determine also the forces, displacements and reactions due to dead load. Use a value of 3,000 ksi for Young's Modulus and 150 pcf for the unit weight. The cap section is 4 feet wide. Include the deformation due to shear in your analysis for both the influence coefficients and the dead load. List only displacements for the influence line loading condition. Process this problem on STRUDL.

STRUDL - TABLE

STANDARD BRIDGE COLUMNS 'STDBRCOL'

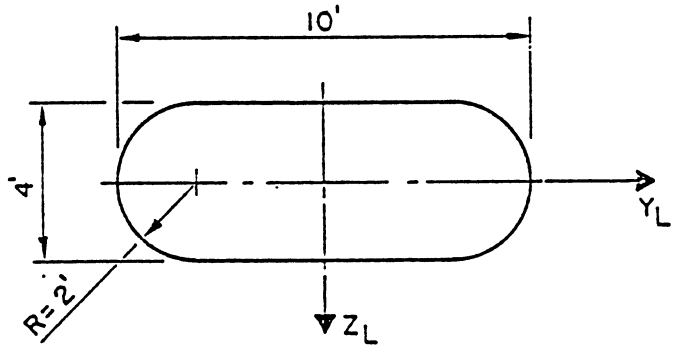

X	TYPE 5A NAME	AREA
0.	'COL5ATOP'	36.6
1.	'COL5A1'	33.9
2.	'COL5A2'	31.7
3.	'COL5A3'	28.5
4.	'COL5A4'	26.0
5.	'COL5A5'	23.5
6.	'COL5A6'	21.2
7.	'COL5A7'	19.0
8.	'COL5A8'	17.2
9.	'COL5A9'	15.7
10.	'COL5A10'	13.8
11.	'COL5A11'	13.0
12.	'COL5A12'	12.7
13.	'COL5A13'	12.6
14.	'COL5ABOT'	12.6

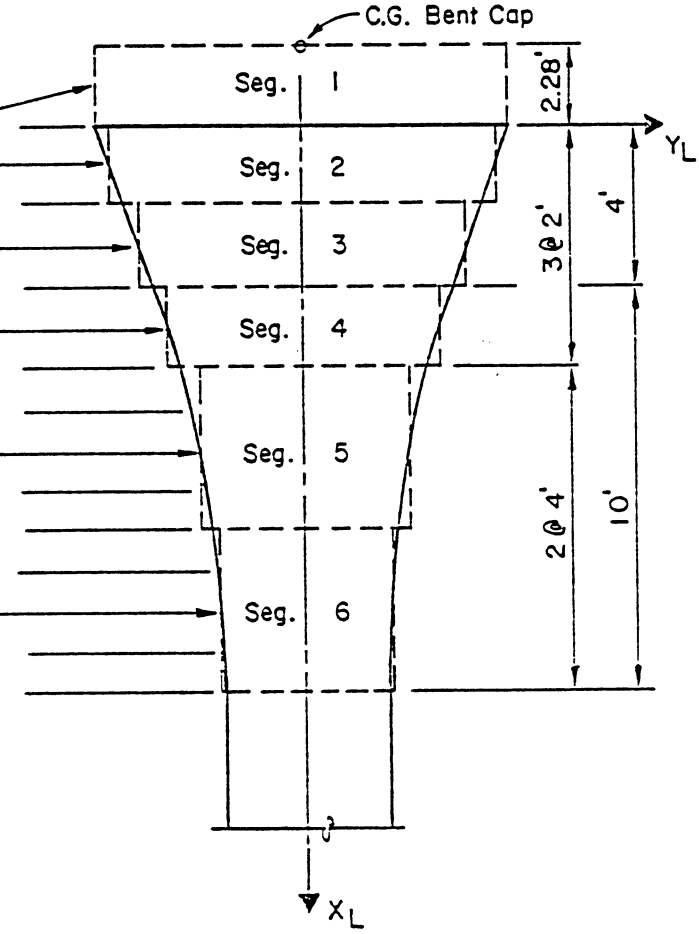

STRUDL model of variable members.

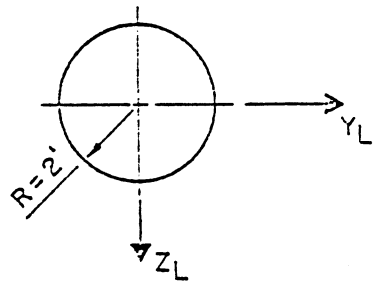

STRUDL model for influence line coefficients.

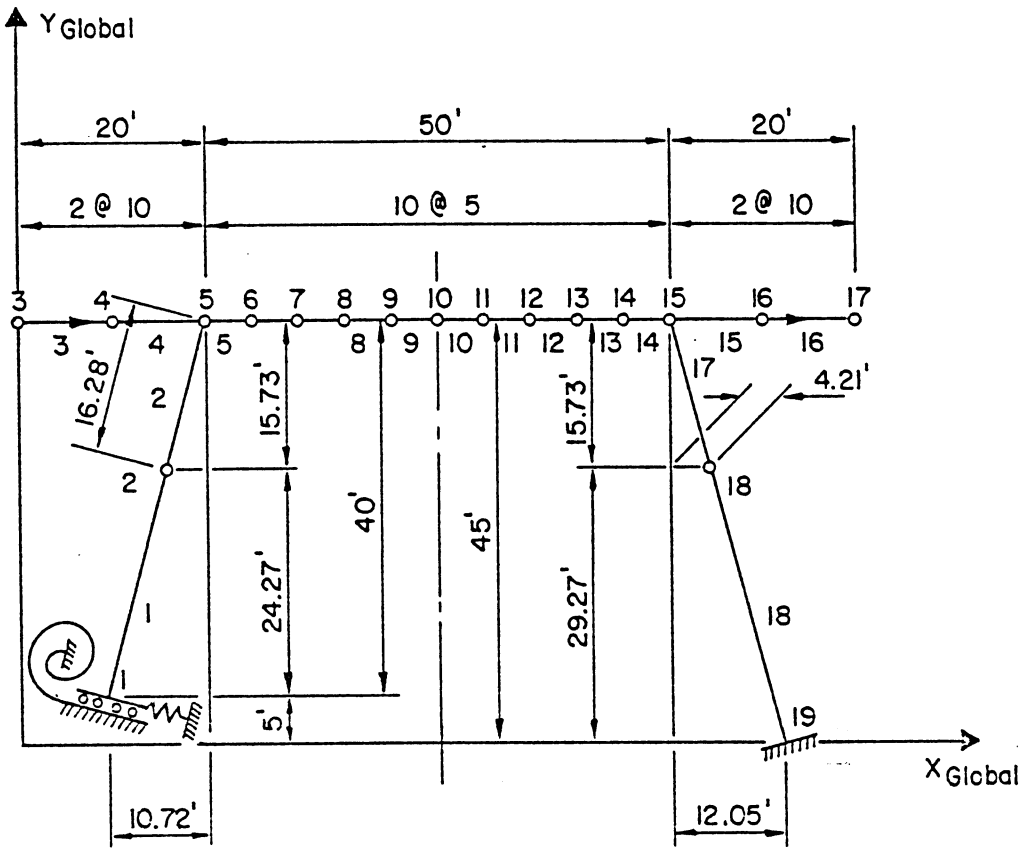

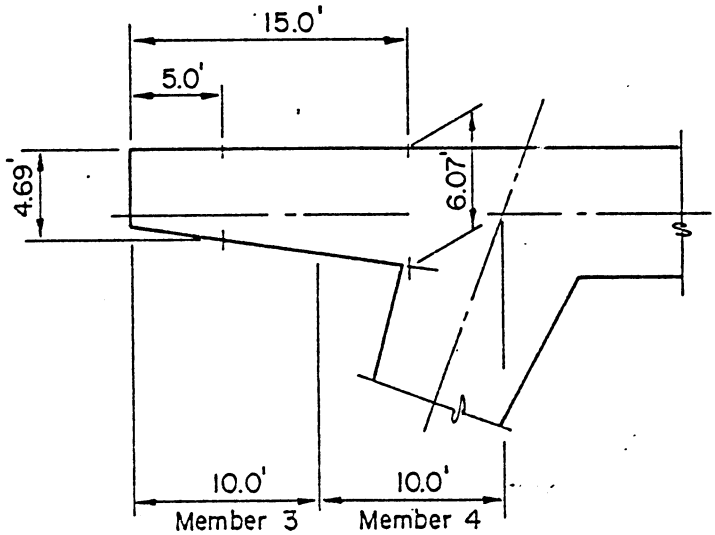

The ICES/STRUDL coding for problem 3.11 is as follows:

```
STRUDL 'PROB3.11' 'EXAMPLE PLANE FRAME PROBLEM, BRIDGE BENT'    $ 14T 60    0010
$   INFLUENCE LINES USING MULLER-BRESLAU PRINCIPAL              $ 14T 60    0020
TYPE PLANE FRAME                                                $ 14T 60    0030
UNITS FEET KIPS DEGREES                                         $ 14T 60    0040
JOINT COORDINATES                                               $ 14T 60    0050
     1    X   9.28  Y   5.0   SUPPORT                            $ 14T 60    0060
     2    X  15.79  Y  29.27                                    $ 14T 60    0070
     3    X   0.0   Y  45.0                                     $ 14T 60    0080
     4    X  10.0   Y  45.0                                     $ 14T 60    0090
     5    X  20.0   Y  45.0                                     $ 14T 60    0100
     6    X  25.0   Y  45.0                                     $ 14T 60    0110
     7    X  30.0   Y  45.0                                     $ 14T 60    0120
     8    X  35.0   Y  45.0                                     $ 14T 60    0130
     9    X  40.0   Y  45.0                                     $ 14T 60    0140
    10    X  45.0   Y  45.0                                     $ 14T 60    0150
    11    X  50.0   Y  45.0                                     $ 14T 60    0160
    12    X  55.0   Y  45.0                                     $ 14T 60    0170
    13    X  60.0   Y  45.0                                     $ 14T 60    0180
    14    X  65.0   Y  45.0                                     $ 14T 60    0190
    15    X  70.0   Y  45.0                                     $ 14T 60    0200
    16    X  80.0   Y  45.0                                     $ 14T 60    0210
    17    X  90.0   Y  45.0                                     $ 14T 60    0220
    18    X  74.21  Y  29.27                                    $ 14T 60    0230
    19    X  82.06  Y   0.0   SUPPORT                            $ 14T 60    0240
JOINT 1 RELEASE TH1 -15.0 KFX 5.E3                              $ 14T 60    0250
UNITS RADIANS                                                   $ 14T 60    0260
JOINT 1 RELEASE KMZ 1.E3                                        $ 14T 60    0270
```

```
MEMBER INCIDENCES                                                    $ 14T 60   0300
     1    2    1                                                     $ 14T 60   0310
     2    5    2                                                     $ 14T 60   0320
     3    3    4                                                     $ 14T 60   0330
     4    4    5                                                     $ 14T 60   0340
     5    5    6                                                     $ 14T 60   0350
     6    6    7                                                     $ 14T 60   0360
     7    7    8                                                     $ 14T 60   0370
     8    8    9                                                     $ 14T 60   0380
     9    9   10                                                     $ 14T 60   0390
    10   10   11                                                     $ 14T 60   0400
    11   11   12                                                     $ 14T 60   0410
    12   12   13                                                     $ 14T 60   0420
    13   13   14                                                     $ 14T 60   0430
    14   14   15                                                     $ 14T 60   0440
    15   15   16                                                     $ 14T 60   0450
    16   16   17                                                     $ 14T 60   0460
    17   15   18                                                     $ 14T 60   0470
    18   18   19                                                     $ 14T 60   0480
MEMBER PROPERTIES                                                    $ 14T 60   0500
     1 18      TABLE 'STDBRCOL' 'COL5ABOT'                           $ 14T 60   0510
     3 16      PRISMATIC  AX 18.76  AY 15.63  IZ 34.39               $ 14T 60   0520
     4 15      PRISMATIC  AX 24.28  AY 20.23  IZ 74.55               $ 14T 60   0530
     5 TO 14   PRISMATIC  AX 28.0   AY 23.3   IZ 114.33              $ 14T 60   0540
     2 17      VARIABLE                                              $ 14T 60   0550
          SEGEMENT  1    TABLE 'STDBRCOL' 'COL5ATOP'  L 2.28         $ 14T 60   0560
          SEGEMENT  2    TABLE 'STDBRCOL' 'COL5A1'    L 2.0          $ 14T 60   0570
          SEGEMENT  3    TABLE 'STDBRCOL' 'COL5A3'    L 2.0          $ 14T 60   0580
          SEGEMENT  4    TABLE 'STDBRCOL' 'COL5A5'    L 2.0          $ 14T 60   0590
          SEGEMENT  5    TABLE 'STDBRCOL' 'COL5A8'    L 4.0          $ 14T 60   0600
          SEGEMENT  6    TABLE 'STDBRCOL' 'COL5A12'   L 4.0          $ 14T 60   0610
UNITS INCHES RADIANS                                                 $ 14T 60   0620
CONSTANTS E 3000. ALL                                                $ 14T 60   0630
```


CALTRANS REPRO SAC. 11-73 300