Section 6 – Underground Structures

Contents

Part 1 – Underground Structures

A. General 6-1
B. Standard Plans 6-3
C. Overfill Tables 6-3
D. Special Design Considerations 6-4

Part 2A – Reinforced Concrete Box Culvert, Cast-In-Place

A. General 6-7
B. Caltrans Research 6-8
C. Design Method 6-8
1. Dead Load 6-9
2. Earth Loads 6-9
3. Live Loads 6-9
4. Impact 6-9
5. Other Loads 6-10
6. Parapets 6-10
D. Design Analysis 6-11
1. AASHTO 6-11
2. Caltrans 6-11
E. Design Criteria 6-16
1. Loadings 6-16
2. Moments 6-17
3. Live Load Distribution 6-17
4. Moment Envelopes 6-19
5. Shear 6-19

Part 2A – Reinforced Concrete Box Culvert, Cast-In-Place – *continued*

F. Design Example – Double 12 × 12 RCB with 10' Cover 6-20
1. Loading Cases to Consider 6-21
2. Loads – Condition 1 (2' Cover) 6-22
3. Loads – Condition 2 (10' Cover) 6-31
4. Section by Shear 6-39
5. Reinforcement by Ultimate Moment 6-40
6. Distribution Reinforcement 6-43
7. Load Moment Envelopes 6-44
8. Reinforced Lengths 6-44
Appendix 6-49

Part 1 – Underground Structures

A. General

Soil-structure interaction systems include both rigid and flexible drainage and highway separation structures. These are usually buried within the roadway embankment, but may also be "At Grade" (i.e. the grade-top cast-in-place reinforced concrete box culvert).

These underground structures–circular pipe, pipe-arch, arch, and box shapes–can be either flexible or rigid structures. AASHTO and *Bridge Design Specifications* presently contain design criteria in Sections 12, 17 and 18 for Soil-Corrugated Metal Structure Interaction Systems, Soil-Reinforced Concrete Structure Interaction Systems, and Soil-Thermoplastic pipe Interaction Systems respectively.

Dimension ratio (DR) is the inside diameter of the culvert (or structure) in inches divided by the wall thickness in inches. Based on Caltrans culvert research program, this new design concept has been developed in the design of circular and semi-circular underground structures. Specifically, the first applications have been to reinforced concrete pipe and reinforced concrete semi-circular arch designs.

Design methods have previously assumed that a pipe was flexible, semi-flexible or rigid depending upon the pipe material. For example, metal pipe culverts were always considered flexible, prestressed concrete pipe culverts were considered semi-rigid, and reinforced concrete pipe culverts were considered as rigid designs.

Research into culvert usage established the fact that prestressed concrete and reinforced concrete pipe culverts have been used in all three ranges, i.e., flexible, semi-rigid and rigid (Figure 1).

The culvert material properties alone do not dictate the structural performance of a circular pipe or semi-circular arch. A key element is the fact that all underground structures are influenced by soil-structure interaction.

In effect, thinner walled, more flexible pipes simply deflect to a more uniform loading condition and consequently, moment is diminished as a design parameter, and thrust becomes the primary design consideration.

Another direct consequence of the culvert research by Caltrans was the discovery of two significant design parameters:

1. In the case of the 10 ft diameter steel structural plate pipe, there was an effective density increase of 50%, subsequent to fill completion, based on readings taken 30 months after installation. Recent research by Norway (TRB 1231 – 1989) on a 25 ft × 22 ft steel structural plate pipe-arch and a 35 ft × 23 ft steel structural plate horizontal ellipse confirmed the results of research by Caltrans of this effective density increase. Since readings were extended, by Norway, to 7 years after installation on the 25 ft × 22 ft steel structural plate pipe-arch, it also showed that the effective density increase took place within 2 years, and then stabilized.

2. For thick wall reinforced concrete pipe and pipe arch designs, the long term readings of 24 months, after fill completion, established the necessity to design for two loadings:

Loading 1 – 140V: 42H
Loading 2 – 140V: 140H

Recent research by Nebraska (TRB 1231 – 1989), on a double 12×12 cast-in-place RCB confirmed the existence of two horizontal design pressure loadings for RCBs.

Seismic forces are normally not considered in soil-structure interaction systems. Observations of all types of underground structures in the 1971 San Fernando earthquake area and in the 1989 San Francisco (Loma Prieta) earthquake area, affirmed the cushioning effect the soil has on the performance of an underground structure during an earthquake. There were no failures due to an increase in soil pressures. Underground structures must move with the surrounding soil during earthquakes and usually will be supported by the interacting earth against crushing or collapse even if the structure joints are strained. If the earth does fault across a culvert, the tremendous forces will shear the submerged structure regardless of how the structure was designed. In special cases where underground structures are in soft ground (bay mud), consideration should be given to providing longitudinal structural continuity.

A most significant difference between overhead and underground structures is in the application of loads. In the case of overhead structures, the application of vertical external loads is limited to live load only. In effect, the increase in loads is linear. However, in the case of underground structures, there are combinations of vertical earth loads and live loads which are not linear, (Figure 2). In effect, the least total combined vertical external load is at 3 to 6 feet of overfill. Consequently, Caltrans has used 10 feet as the minimum design overfill; and specifies that all underground structures satisfy all loading combinations of dead load, earth load and live load between minimum cover of 2 feet, (at grade for CIP RCB), and 10 feet overfill. An underground structure designed for 5 feet overfill could be marginal, or inadequate structurally, if either an additional overfill of 5 feet was added during the life of the structure; or 3 feet of overfill (or 5 feet for a CIP RCB), was removed during the specified 50 year service life. As a consequence, no underground structure designed since 1965 has required replacement.

B. Standard Plans (Caltrans)

Underground Structures Standard Plans

D79 Precast RCP
D80 CIP Single Box RCB
D81 CIP Double Box RCB
D95 Reinforced Concrete Arch (Horseshoe)
B14-1 SSP Vehicular UC

C. Overfill Tables

Highway Design Manual, Chapter 850

Corrugated Steel Pipe

854.3B 2⅔ in. × ½ in. Corrugations – helical
854.3B 3 in. × 1 in. Corrugations – helical
854.3C 5 in. × 1 in. Corrugations – helical
854.3D 2⅔ in. × ½ in. Corrugations – annular

Corrugated Steel Pipe Arch

854.3E 2⅔ in. × ½ in. Corrugations – helical or annular

Corrugated Aluminum Pipe

854.4A 2⅔ in. × 1½ in. Corrugations – helical or annular
854.4A 3 in. × 1 in. Corrugations – helical or annular

Corrugated Aluminum Pipe Arch

854.4C 2⅔ in. × ½ in. Corrugations – helical or annular

Steel Spiral Rib Pipe

854.5A ¾ in. × 1 in. @ 11½ in. pitch
854.5B ¾ in. × ¾ in. @ 7½ in. pitch

Aluminum Spiral Rib Pipe

854.5C ¾ in. × ¾ in. @ 7½ in. pitch

Steel Structural Plate Pipe

854.6A 6 in. × 2 in. Corrugations

Steel Structural Plate Pipe Arch

854.6B 6 in. × 2 in. Corrugations

Aluminum Structural Plate Pipe

854.6C 9 in. × 2½ in. Corrugations

Aluminum Structural Plate Pipe Arch

854.6D 9 in. × 2½ in. Corrugations

Cast-In-Place Non-Reinforced Concrete Pipe

854.2

Plastic Pipe (Preliminary)

859.X Plastic High Density Polyethylene Pipe. Corrugated, ribbed.
Poly Vinyl Chloride Pipe. Ribbed Profile Wall

D. Special Design Considerations

Load Factor design is to be applied to all underground structures. The culvert research by Caltrans has conclusively shown that initially used empirical design for underground structures and the subsequently developed service load design does not provide structural adequacy for underground structures.

In order to determine the type of culvert material to be used, the resistivity and pH for the soil and water shall be determined for each culvert installation. Consult *Highway Design Manual* topic 852-Design Service Life.

The hydraulics shall also include information concerning the possibility of scour and abrasion at any proposed culvert installation.

Cutoff walls should be provided whenever scour is a potential problem. Further, headwalls, endwalls or flared end sections are design features that may be required to assure the culvert structural integrity.

Figure 1. Soil-Circular Structure Interaction Systems

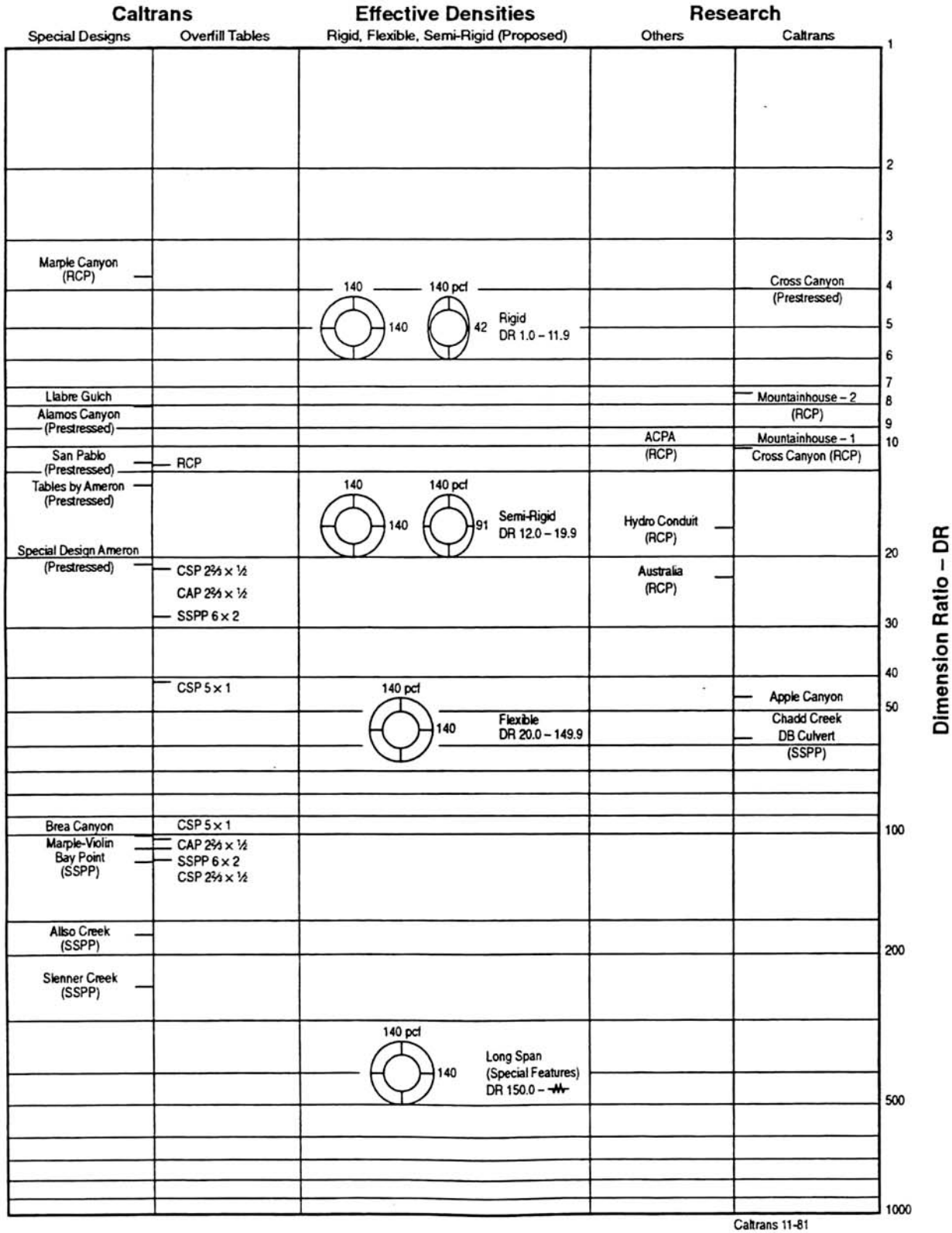

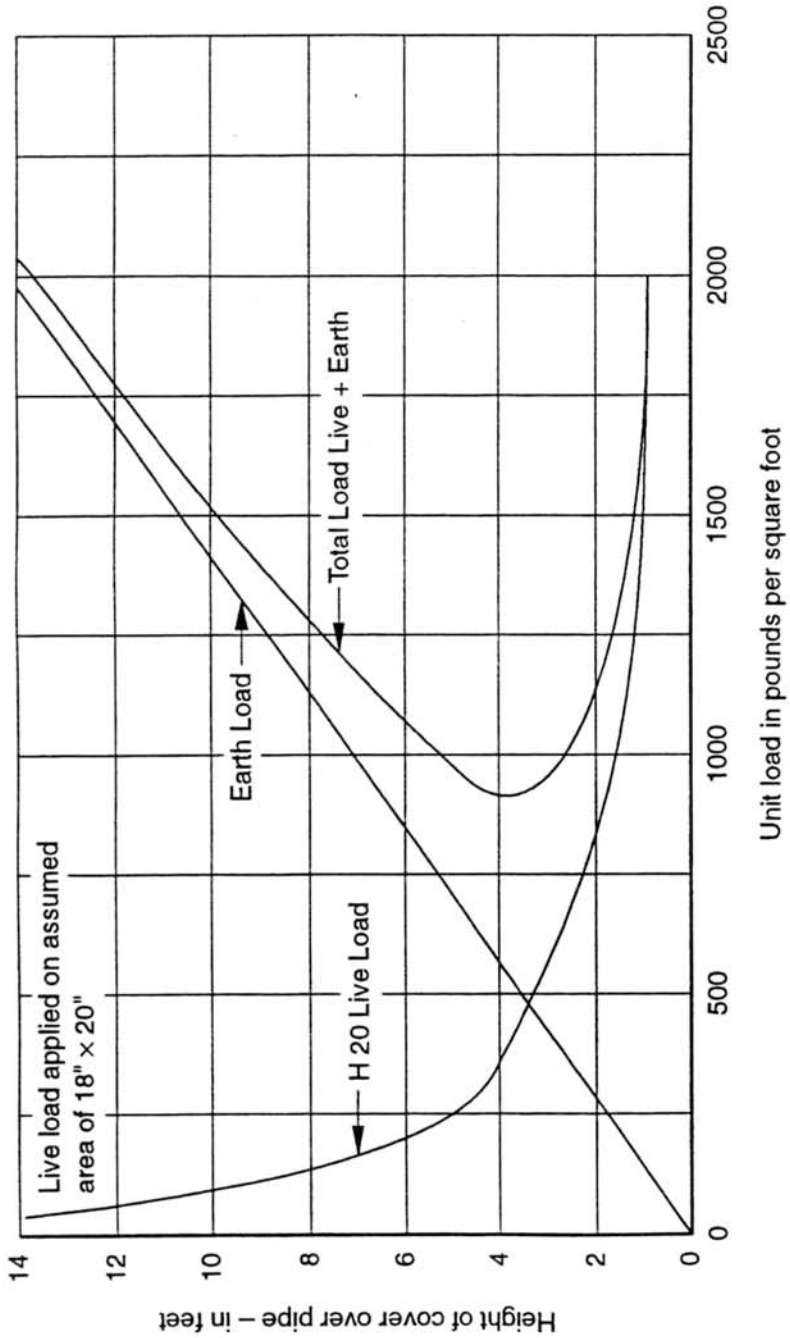

Figure 2. Combined Earth Load and Live Load Pressure Diagram

Part 2A
Reinforced Concrete Box Culvert, Cast-In-Place

A. General

For economic reasons, Cast-In-Place RCB culverts in Caltrans Standard Plans are designed as rigid frames when either the span or height exceeds 8 feet, and the outer corners are designed as pin-ended if both the span and height are 8 feet or less.

Ends of interior walls (for multiple cells) are normally considered pinned unless the reinforcement has sufficient embedment into the slabs.

Box culverts under high earth covers are probably less economical than other shapes. Other shapes (circular, arch, and elliptical) should always be investigated for earth covers over 20 feet. If an RCB is the culvert type selected for fills over 20 feet, generally a rigid frame is preferable, regardless of span or height.

For significantly non-uniform loads, for example, if the RCB runs along the toe of an embankment, or next to a retaining wall, design the structure as a rigid frame.

The bearing capacity of the supporting medium shall always be considered. The Division of New Technology, Material and Research (DONTMR), Office of Engineering Geology, shall be consulted where footing pressures exceed 1½ tons per square foot, or the span exceeds 10 feet. [See *Highway Design Manual*, 829.2(1) Bedding and Backfill, Paragraph 4]

Do not place reinforced concrete box culverts on piles. Other alternatives shall be considered such as moving the location, using alternate types of culverts, or subexcavating and backfilling with suitable material.

Reinforcement is normally placed transversely, as this is the most efficient span. However, if unusual conditions indicate that placement along a skew is much more economical and practical, the design frame span will then be parallel to the bars . . . with a resultant increase in concrete depth and reinforcing steel.

Compressive reinforcement is not considered in RCB design because just a small deviation in rebar location (in these relatively thin members) could result in a big change in capability. However, if compression steel is considered, for analysis of an existing culvert only, it would be limited to half of the tension reinforcement.

Although axial load (thrust) is a valid component member design, it has not been considered in the formula developed or applied to the Standard Plans.

For design notes, construction notes, and pertinent information, see current RCB Culvert Standard Plans D80, D81, and D82.

B. Caltrans Research

The research conducted by Caltrans of three reinforced concrete (horseshoe) arches (1963 thru 1975) resulted in a significant change in the design of reinforced concrete underground structures. It was found that the lateral pressures can be as much as the vertical pressures. Therefore, the traditional loading wherein the lateral pressure is taken as 30% of the vertical pressure has been supplemented with a second loading wherein the lateral pressure is also taken as 100% of the vertical pressure. These two loadings are applied separately and the resulting maximum moments are utilized in design.

Loading 1	140V: 42H
Loading 2	140V: 140H

Recent research by Tadros, of Nebraska University (TRB 1231 – 1989) has affirmed the two bands of loading concept on RCB Culvert Design.

C. Design Method

Caltrans RCB culverts are analyzed and checked by load factor design only. The service load (i.e., working stress or elastic design) does not apply to these structures — see *Bridge Design Specifications* 17.2.

The derived applicable load factors for Group X (culverts) are obtained from

$$\frac{1.3}{0.9}(D + E + 1.67(L+I)).$$

Simplifying:

$$1.5D + 1.5E + 2.5(L + I)$$

Where D = Dead Load
E = Earth Load
L = Live Load
I = Impact

See page 12 and 13 for formula derivation and values.

1. Dead Load (D)

Assume a structure weight for concrete plus reinforcement of 150 pounds per cubic foot.

2. Earth Loads (E)

Based on Caltrans culvert research, it has been determined that the "equivalent soil density" is 140 pcf. This "equivalent soil density" is based on the actual maximum in-situ densities observed on Caltrans culvert research projects. The full lateral pressure condition also satisfies the saturated fill situation.

3. Live Loads

For box culverts under highways, only HS20 truck loads apply. Alternative loadings, lane loadings, and P-Loads are not used in the design.

When the RCB is at grade, or with a cover equal to or less than 2 feet, wheel loads are distributed as though they were applied directly to the roof, as in ordinary slab bridges. Wheel live load distribution to the invert is assumed as a uniform load applied transversely across the width and 7 feet longitudinally along the length of the RCB. Concentrated live load distribution reinforcement shall be placed in the roof. All RCB's with cover equal to and less than 10' shall be designed for two conditions:

a) 2 feet cover with HS20-44 live load
b) 10 feet of cover (See BDS 6.4.4 for live load distribution)

If loaded construction equipment passes across an RCB when the cover is less than 5 feet, temporary cushioning and possibly struts may be required (see Standard Plan D88), or the roof shall be designed for the construction equipment loading.

See the current A.R.E.A. specifications for the design of reinforced concrete box culverts with railway loading.

The 2-foot live load surcharge, formerly added on top of the lateral load to simulate highway live loads, is no longer applied because of the more conservative design resulting from the two bands of earth loading.

4. Impact (I)

Apply impact only to the roof slab of RCB culverts.

Earth Cover	Impact
$0 \leq 1$ feet	30%
$1 \leq 2$ feet	20%
$2 \leq 3$ feet	10%
over 3 feet	0%

Railroad impact may be much larger than 30% and is determined by the formula given in A.R.E.A. Specifications.

5. Other Loads

Transverse expansion joints are usually provided at intervals in the roof and walls to control shrinkage cracking and to relieve stresses caused by differential settlement. See Standard Plans for application. Deep or varying fills may generate tension forces along an RCB as the foundation compacts; therefore, tension continuity is maintained in the invert so that it will not pull apart or displace vertically and permit scour or flow obstruction.

Culverts with shallow cover in saturated ground, such as storage boxes for pumping plants, should be checked for buoyancy.

In the rare case when a head of water can exist (as in a siphon condition), hydraulic pressure inside the cells of rigid frames will oppose the wall moments (due to earth pressure). Where cover is shallow, tension may occur across the top of the roof.

Seismic forces are normally not applicable in soil-structure interaction systems.

In general, wind loads, centrifugal forces, and longitudinal forces from highway or railroad traffic need not be considered.

6. Parapets

Parapets, projecting above the roof, serve as low barriers to restrain loose earth or other debris from falling onto the channel. See Parapet Details on Standard Plan D82.

On RCBs with skewed ends, parapets also serve as edge beams to support the cantilevered end of the transverse reinforcement. The beam-depth includes the roof thickness. To avoid an unusually high parapet, consider several possibilities:

- Lengthen the RCBs even though the extra deck is not needed for ground conditions.
- Aligning the main-steel to be parallel to the skewed ends of the RCB culvert will increase the design frame length, the slabs will be thicker, and the amount of reinforcement will increase. Care is necessary to modify details which will be incompatible with Caltrans standard sections. Skewing rebar should be a final resort.

NOTE: The area that loads a skewed parapet is shown shaded (wheel loads are generally the major load):

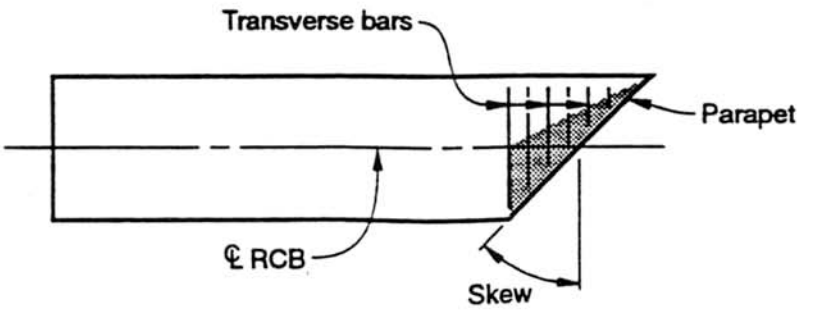

When parapets serve as vehicular barriers, make sure the reinforcement is sufficiently anchored into the culvert roof to transfer the impact forces. If stirrups are required, embed them adequately into the roof. Finally, consider the torque applied to the roof-end by live load impact. See "Barrier Section" and "Parapet Detail" on Standard Plan D82.

When extending existing boxes (with skewed ends), it will be necessary to consider if the parapet is a supporting beam—and not remove the projecting portion without providing replacement support (during construction). Sometimes, the simplest solution to extending a culvert with a skewed end, is to leave the existing parapet in place and add a corresponding parapet on the abutting end of the extension. See culvert extension details on Standard Plan D82. Negative moment reductions do not apply.

D. Design Analysis

1. *AASHTO (Ref. BDS 3.22)*

Group X

$$P = \gamma[\beta_D D + \beta_E E + \beta_L(L + I)]$$

γ = 1.3 Gamma Factor
β_D = 1.0 Beta Factor for dead load of concrete
β_E = 1.0 Beta Factor for earth pressure
β_L = 1.67 Beta Factor Live Load
D = Dead Load
E = Earth Load
L = Live Load
I = Impact

2. *Caltrans*

a) Formula Derivation:

For simplicity of application, in RCB culvert design, the gamma factor has been transferred to applied loading from the existing formulas.

AASHTO, modified, now becomes:

$$\text{Group X} = \frac{\gamma}{\phi}[\beta_D D + \beta_E E + \beta_L(L + I)]$$

ϕ is Strength Reduction Factor, also known as Capacity Reduction Factor. (Ref. BDS Article 8.16.1.2 and 17.6.4.5)

ϕ = 0.9 for flexure
ϕ = 0.85 for shear

$$\frac{\gamma}{\phi} = \frac{1.3}{0.9} = 1.45 \text{ for flexure}$$

$$\frac{\gamma}{\phi} = \frac{1.3}{0.85} = 1.53 \text{ for shear}$$

$$\text{Average} = \frac{1.45 + 1.53}{2} = 1.49 - \text{use } 1.5$$

$$\text{Group X} = 1.5[1.0D + 1.0E + 1.67(L + I)]$$
$$= 1.5D + 1.5E + 2.5(L + I)$$

which is the formula shown on Standard Plan D82.

b) Dead Load (D)

Concrete Density = 150 pcf

c) Earth Pressures (E)

	Effective Densities, pcf	
	Vertical	Lateral
Loading 1	140	42
Loading 2	140	140

140 pcf is the in-situ soil density as observed in Caltrans culvert research projects. Note that AASHTO values are different.

d) Live Load and Impact (LL + I)

HS20-44 Truck Load.

e) Structural Analysis

Conventional moment-distribution will be applied to the rectangular cross-section of a box culvert.

f) Design Formulas (See BDS Article 8.16.3)

The design formulas are:

Rectangular section, no compressive reinforcement.

(1) Ultimate Concrete Moment Strength

$$M_u = f_y A_s d\left(1 - \frac{a}{2d}\right) \qquad \text{(Formula 1)}$$

Compression = Tension
C = T

$$\text{where } a = \frac{f_y A_s}{0.85 f'_c b} \qquad \text{(Formula 2)}$$

Substituting

$$M_u = f_y A_s d\left(1 - \frac{f_y A_s}{2 \times 0.85 f'_c bd}\right) \qquad \text{(Formula 3)}$$

$$\text{Reinforcing Ratio } \rho = \frac{A_s}{bd} \qquad \text{(Formula 4)}$$

$$M_u = f_y A_s d\left(1 - \frac{f_y}{1.7 f'_c}\rho\right) \qquad \text{(Formula 5)}$$

(2) Steel Reinforcement

(a) Balanced Steel Ratio

Rectangular section with tension reinforcement only

$$\rho_b = \left(\frac{0.85\beta_1 f'_c}{f_y}\right)\left(\frac{87}{87 + f_y}\right)$$

$f'_c = 3.25$ ksi
$f_y = 60$ ksi
$\beta_1 = 0.85$, for $f'_c \leq 4$ ksi
$\beta_1 = 0.80$, for 4 ksi $< f'_c \leq 5$ ksi
for Caltrans' basic stresses, $\rho_b = 0.023$ (Formula 6)

(b) Maximum Allowable Steel Ratio

$\rho_{max} = 0.75\rho_B$
$\rho_{max} = 0.0174$ (Formula 7)

(c) Minimum Allowable Steel Ratio

$$\rho_{min} = 1.7\left(\frac{t}{d}\right)^2\left(\frac{\sqrt{f'_c}}{f_y}\right)$$

$$\rho_{min} = 0.0016\left(\frac{t^2}{d^2}\right) \qquad \text{(Formula 8)}$$

since $t = d + \frac{\text{dia.}}{2} + 2$ in. clearance

$$\rho_{min} = 0.0016\left(\frac{t}{t - \frac{\text{dia.}}{2} - 2}\right)^2$$

d) Design Equations

Caltrans basic stresses for cast-in-place reinforced concrete boxes are:

$f'_c = 3.25$ ksi $\qquad f_y = 60$ ksi

Concrete Design

$$M_u = 60\,A_s\left(\frac{d}{12}\right)\left(1 - 0.6\rho\frac{60}{3.25}\right)$$

$M_u = 5A_s d(1 - 11\rho)$

$A_s = \rho bd$; and $b = 12$ in.

$M_u = 60d^2\rho(1 - 11\rho)$ in. foot-kips/foot

Solving for d

$$d = \left[\frac{M_u}{60\rho(1 - 11\rho)}\right]^{\frac{1}{2}}$$

$$\min d = \left[\frac{M_u}{60\rho_{max}(1 - 11\rho_{max})}\right]^{\frac{1}{2}} \qquad \text{(Formula 9)}$$

$$\min d = \sqrt{1.2M_u}$$

(1) Steel Reinforcement

Design A_s

$$A_s = \frac{M_u}{5d(1-11\rho_{max})}$$

$$= \frac{M_u}{5d(1-11\times 0.0174)}$$

$$A_s = 0.25\frac{M_u}{d} \qquad \text{(Formula 10)}$$

(2) Shear

Caltrans allowable shear stress

$$V_c = 3.5\sqrt{f_c'}$$

Without stirrups

$$\min d = \frac{V_{u_{max}}}{bV_c} \qquad \text{(Formula 11)}$$

With stirrups

$$V_u = V_u bd = (V_s + V_c)bd$$

$$\max V_u = 4\sqrt{f_c'} + V_c = 4\sqrt{f_c'} + 3.5\sqrt{f_c'} = 7.5\sqrt{f_c'} \qquad \text{(Formula 12)}$$

E. Design Criteria

1. *Loadings*

(Note: Invert design pressures not shown)

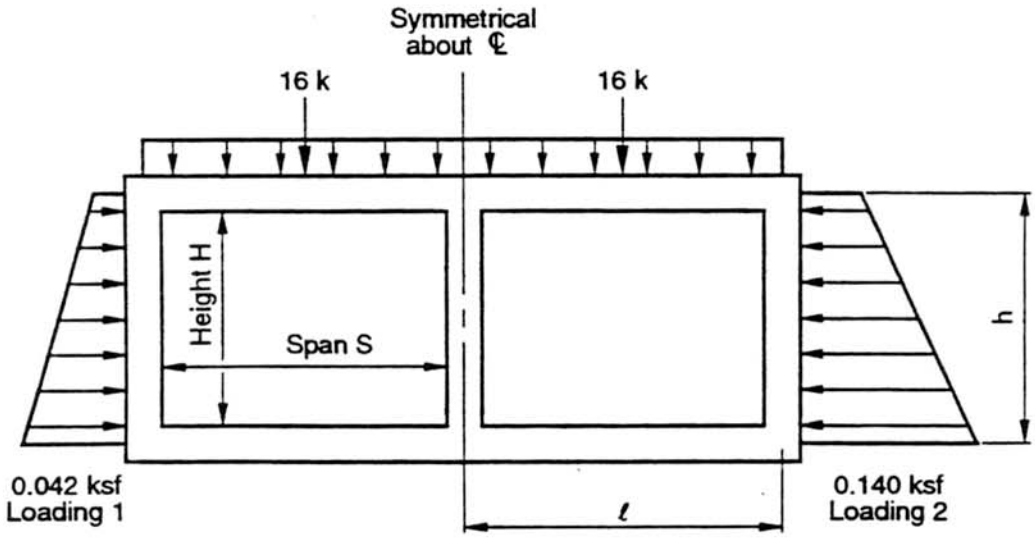

Condition 1: 2' Cover

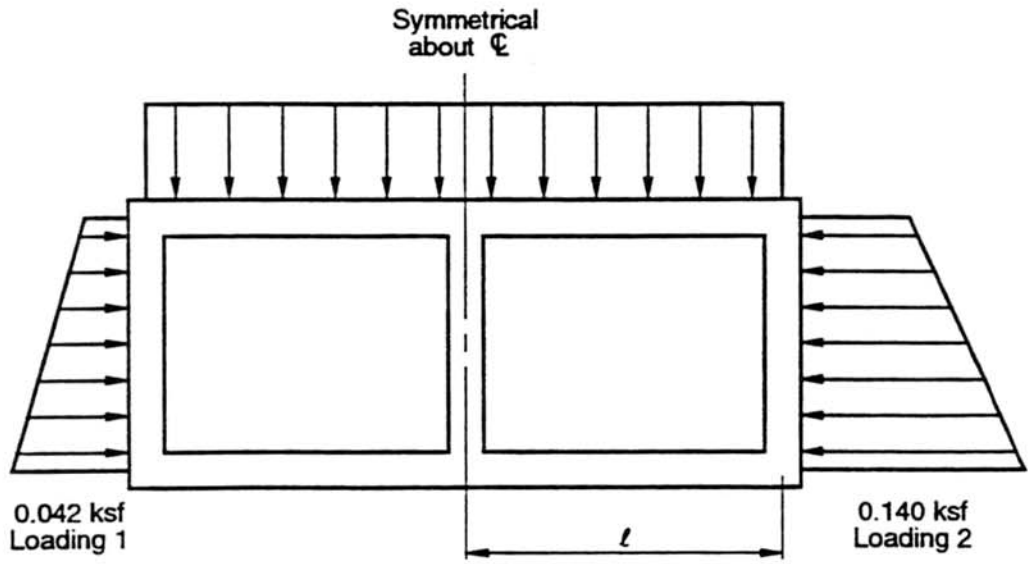

Condition 2: 10' Cover

2. Moments

Slabs: $FEM = \frac{w\ell^2}{12}$

$SBM = \frac{w\ell^2}{8}$

Exterior Walls: $FEM_{top} = \frac{P_t h^2}{12} + \frac{\Delta p h^2}{30}$

$FEM_{btm} = \frac{P_t h^2}{12} + \frac{\Delta p h^2}{20}$

$SBM_{mid} = \frac{P_t h^2}{8} + \frac{\Delta p h^2}{16}$

3. Live Load Distribution

a) Load at Grade (roof)

HS20 wheel loads are applied directly upon the concrete roof. The wheel is concentrated in the direction shown and spread evenly along a distance E (wheel distribution on slabs) longitudinally with RCB.

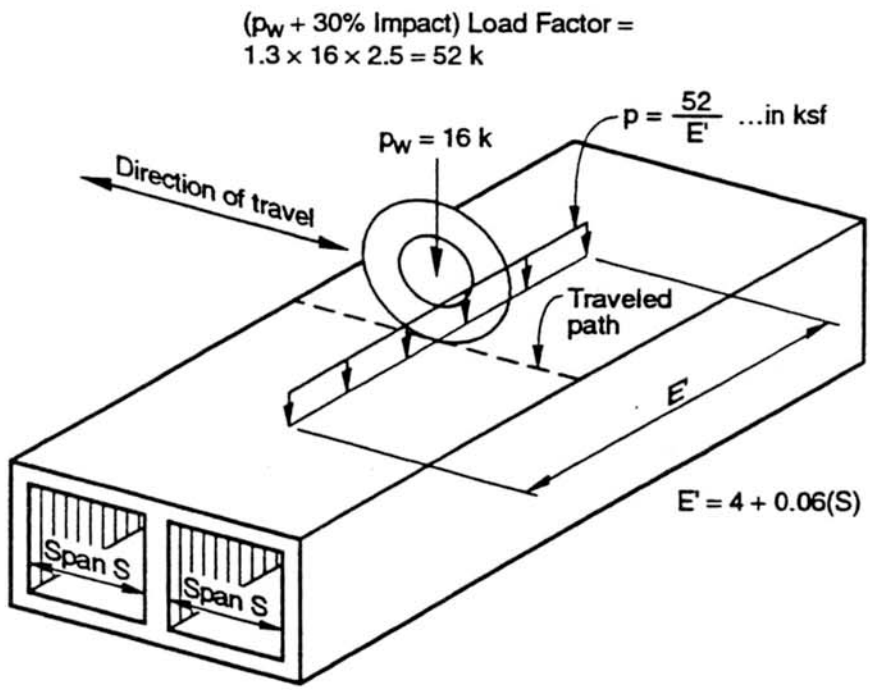

Surrounding ground is not shown

The above depicts the usual situation where the direction of traffic crosses normal to culvert. Therefore, the traffic travels roughly parallel to the main reinforcement.

b) Load at Grade (invert)

16 k wheel load is "distributed" (causes soil bearing resistance) under the area below, without impact.

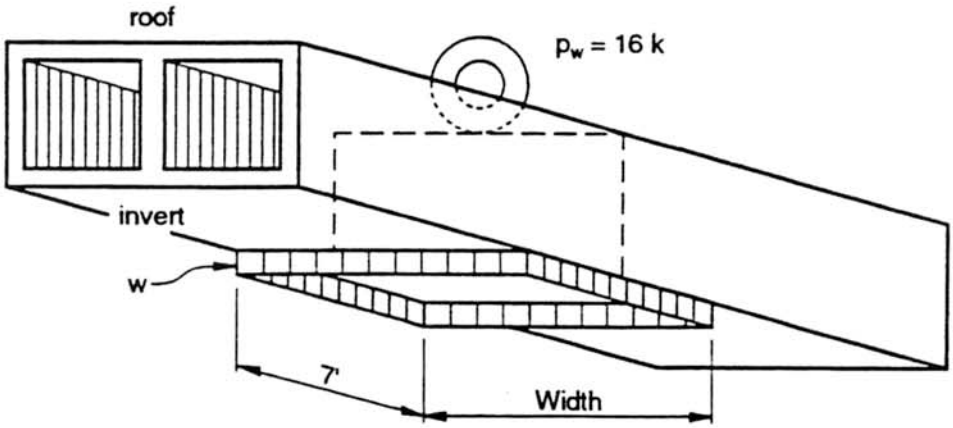

$$w = \frac{P_w}{7 \times \text{width}} \times \text{Load Factor...in ksf}$$

Total P_w	Width	W
16 k	Under 14 ft	$\frac{5.7}{\text{width}}$ ksf
32 k	14 ft. to less than 28 ft	$\frac{11.4}{\text{width}}$ ksf
36 k	28 ft. minimum	$\frac{12.9}{\text{width}}$ ksf

c) Load Distributed Through Fill

When the depth of fill is more than 2 feet, concentrated line loads shall be distributed over a square, the sides of which shall equal 1¾ times the depth of fill. (See BDS Section 6.4.4). If multiple lanes are encountered each load should be calculated to determine controlling (maximum) load. (See BDP example pages 6-32).

4. Moment Envelopes

Double RCB (Units in pcf)

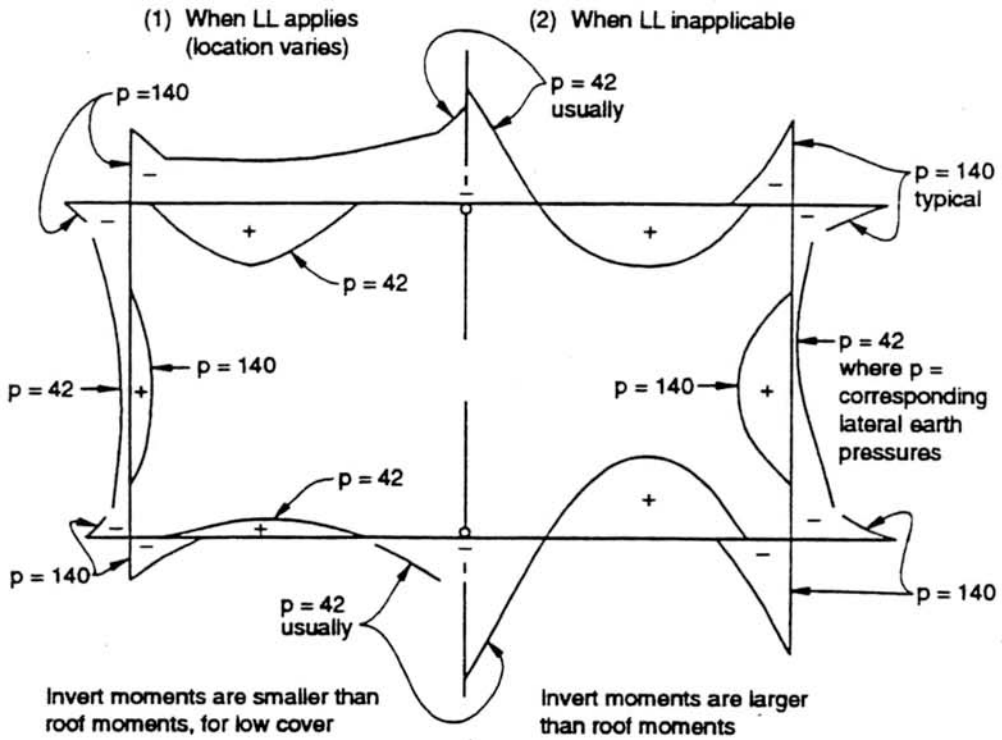

5. Shear

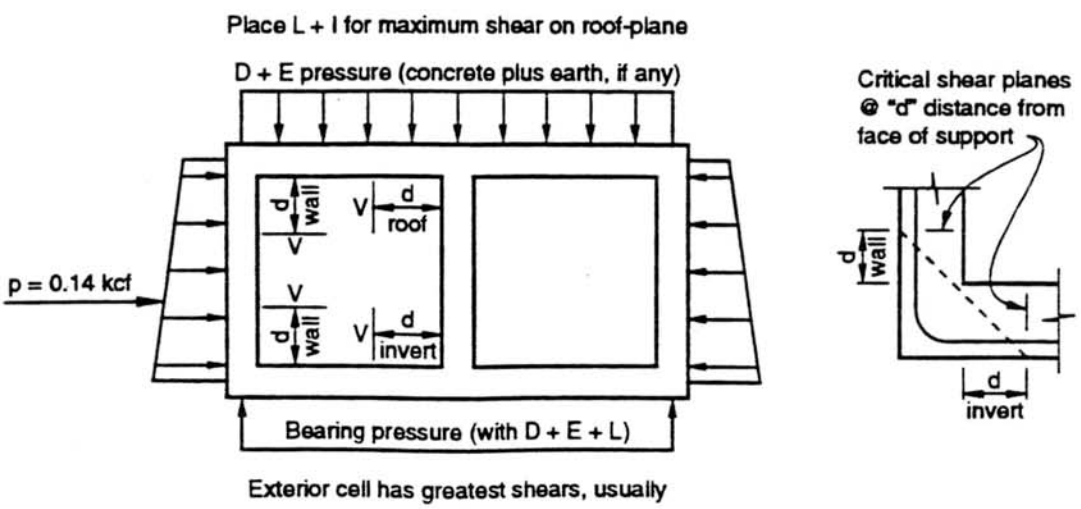

F. Design Example

Double 12 × 12 RCB Culvert with 10 ft cover.

Notes to Designer:

1. Use the number of design cycles as necessary to determine the maximum possible negative distributed end moments and maximum possible positive mid-span member moments.
2. When the depth of earth cover is 10 feet or less, all RCB culverts shall be designed to meet the requirements of *Bridge Design Specifications*, Article 6.4.1 for the following two conditions:
   - Condition 1, 2 feet earth cover.
   - Condition 2, 10 feet earth cover.
3. Use "Load Factor Design" only.

1. *Loading Cases to Consider*

Condition 1 – Loadings:

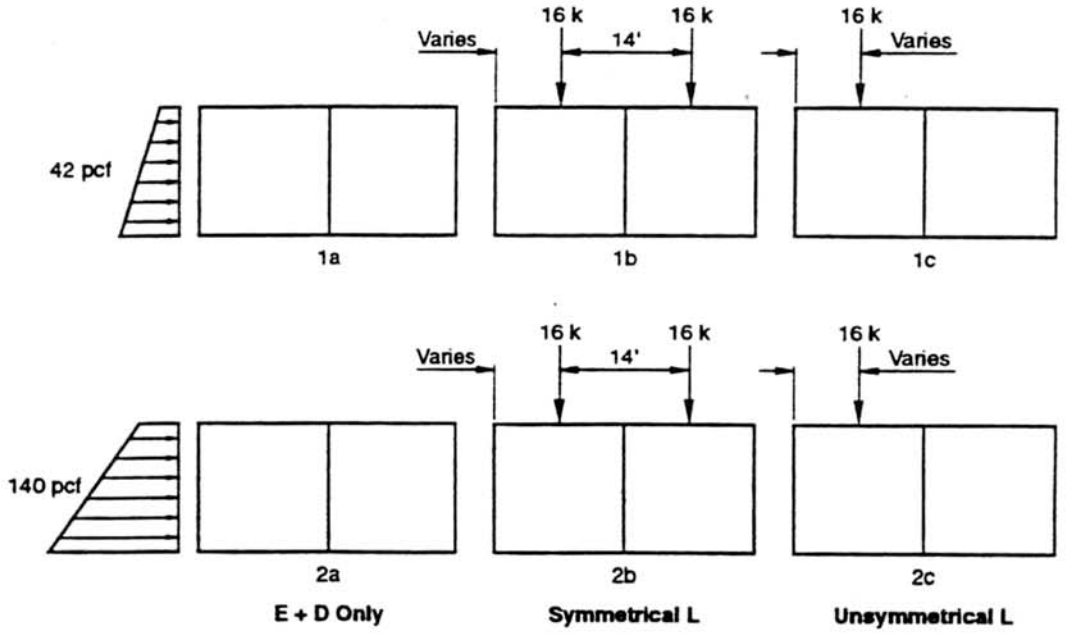

Condition 2 – Loadings:

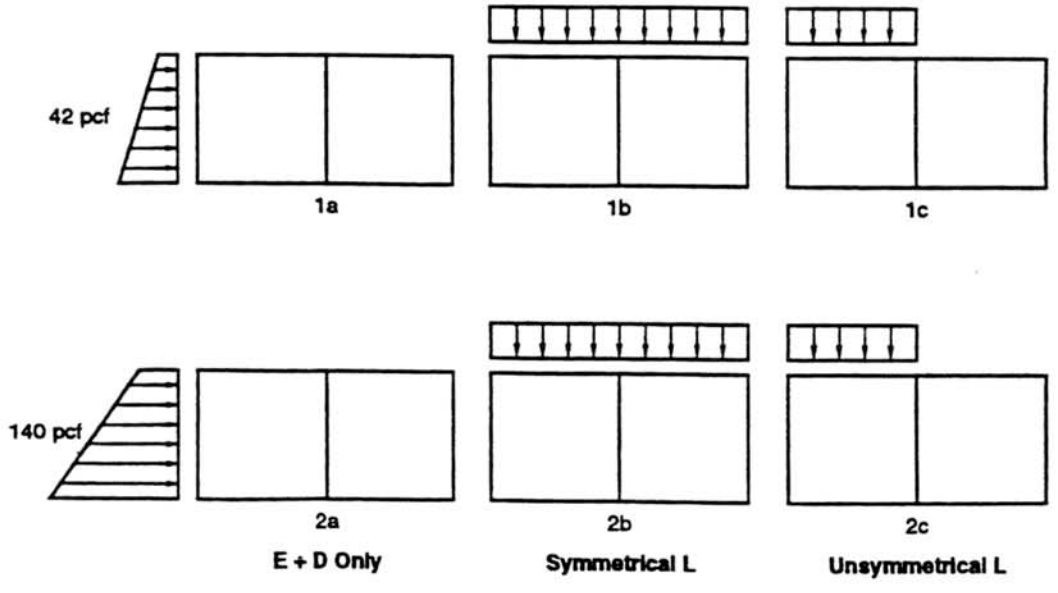

2. Loads – Condition 1 – (2 ft. Cover)

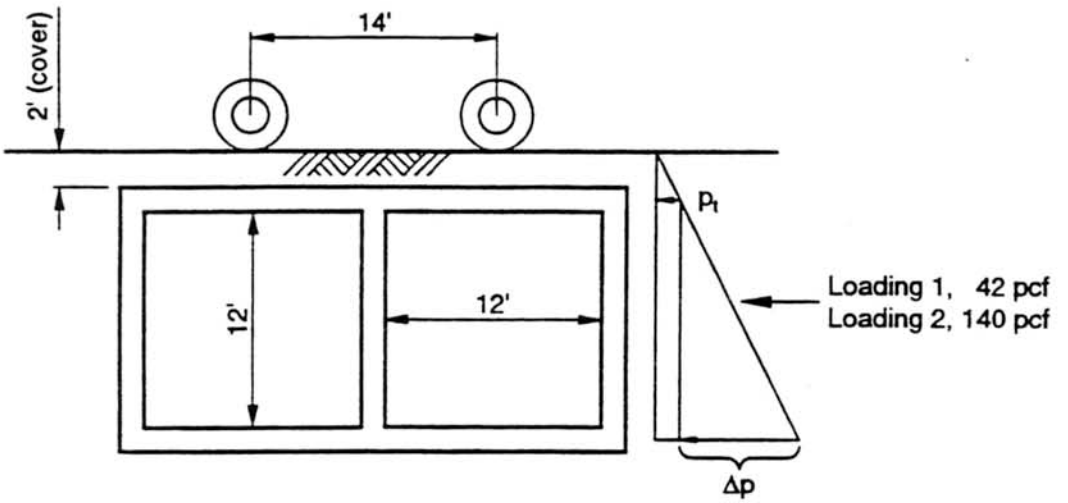

Assume Member Thickness:

Check Standard Plan "D-82" sheet and make best guess.

Say $t_{roof} = 10$ in.
$t_{invert} = 10$ in.
$t_{Ex\ Wall} = 11$ in.
$t_{In\ Wall} = 08$ in.

Factored Loads:

$$L = L = \frac{P_w}{E} = \frac{16\ k/wheel}{(4+0.06(12'))} \times 2.5 = 8.48\ k/ft$$

$$I = 0.20 \times 8.47 = \underline{1.69}$$

$$\therefore p = \underline{\underline{10.17\ k/ft}}$$

Pressures:

Roof:

Earth: $w_e = 2 \times 0.14\ kcf \times 1.5 = 0.42\ ksf = 0.42\ ksf$

Roof: $w_{deadload} = \frac{10"}{12\ in/ft} \times 0.15\ kcf \times 1.5 = \underline{0.19\ ksf}$

$\therefore w_{roof} = \underline{\underline{0.61\ ksf}}$

Invert:

LL: $\left(\frac{\text{one wheel}}{\text{w / o I}}\right) w_L = \frac{16k}{7\text{ ft}\left[12\text{ ft} + 12\text{ ft} + \left(\frac{2\times 11\text{ in} + 8\text{ in}}{12}\right)\right]} \times 2.5 = \underline{\underline{0.22\text{ ksf}}}$

$\left(\frac{\text{two wheel}}{\text{w / o I}}\right) w_L = 2 \times 0.22 = \underline{\underline{0.44\text{ ksf}}}$

DL: $w_{wall} \frac{(2\times 11 + 8)\times 12/12}{\left(12\text{ ft}\times 2 + \frac{11\text{ in}\times 2}{12} + \frac{8\text{ in}}{12}\right)} \times 0.15 \times 1.5 = \underline{\underline{0.25\text{ ksf}}}$

$w_{roof} = \underline{\underline{0.61}}$

$w_{invert} = 0.25 + 0.61 = \underline{\underline{0.86\text{ ksf}}}$

Walls:

42 pcf

$p_t = \left(2\text{ ft} + \frac{10\text{ in}}{2\times 12\text{ in}}\right) \times 0.042 \times 1.5 = \underline{\underline{0.15\text{ ksf}}}$

$\Delta p = \left(12\text{ ft} + \frac{2\times 10\text{ in}}{2\times 12\text{ in}}\right) \times 0.042 \times 1.5 = \underline{\underline{0.80\text{ ksf}}}$

140 pcf

$p_t = 0.15/0.3 = \underline{\underline{0.51\text{ ksf}}}$

$\Delta p = 0.80/0.3 = \underline{\underline{2.70\text{ ksf}}}$

Member Lengths:

$\ell_{roof} + 12 + \left(\frac{11\text{ in} + 8\text{ in}}{2\times 12\text{ in / ft}}\right) = \underline{\underline{12.79\text{ ft.}}}$

$\ell_{invert} = \ell_{roof} = \underline{\underline{12.79\text{ ft.}}}$

$\ell_{wall} = 12 + \left(\frac{10\text{ in} + 10\text{in}}{2\times 12\text{ in / ft}}\right) = \underline{\underline{12.83\text{ ft.}}}$

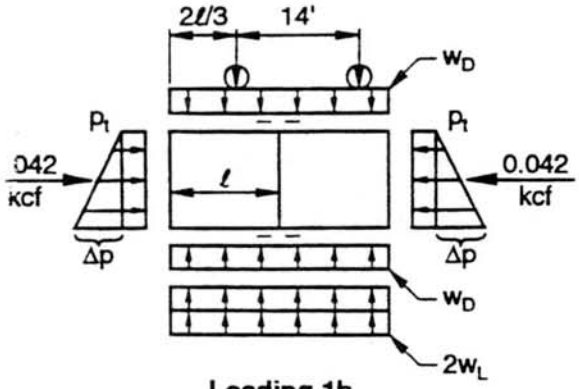

Loading 1b

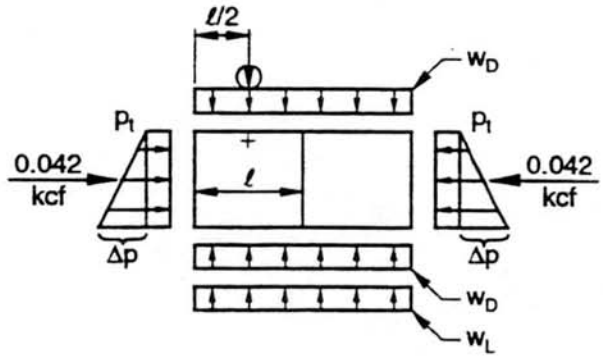

Loading 1c

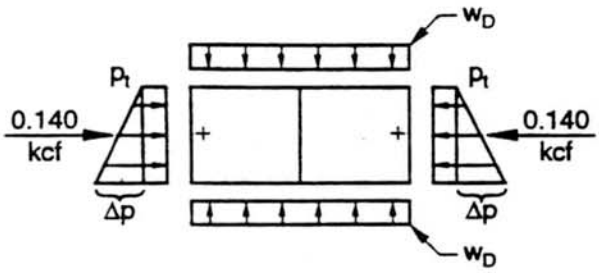

Loading 2a

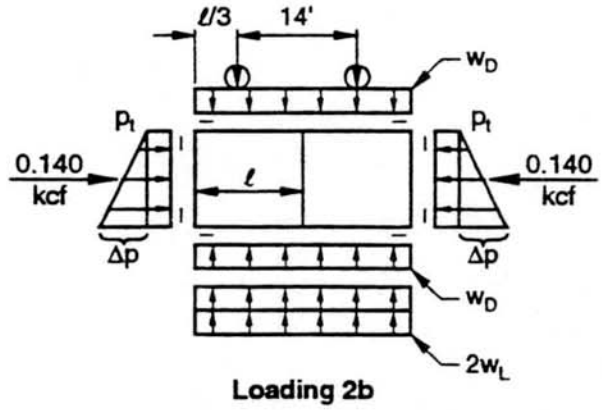

Loading 2b

NOTE: Different shaped RCB culverts will require different loading combinations to acquire the maximum design moment envelopes.

FEM

Roof: (L @ $\ell/2$)

$$\frac{P\ell}{8}+\frac{w\ell^2}{12}$$

$$=\frac{10.17(12.79)}{8}+\frac{0.61(12.79)^2}{12}$$

$$= 16.26 + 8.32 = \underline{\underline{24.5\ 'k}}$$

(L @ $\ell/3$)

$$\text{Lt: } \frac{4}{27}(P\ell)+\frac{w\ell^2}{12}$$

$$= 19.27 + 8.32 = \underline{\underline{27.9\ 'k}}$$

$$\text{Rt. } \frac{2}{27}(P\ell)+\frac{w\ell^2}{12}$$

$$= 9.64 + 8.32 = \underline{\underline{17.95\ 'k}}$$

(L @ $2\ell/3$)

Span 1:

Lt = Rt above = $\underline{\underline{17.95\ 'k}}$

Rt = Lt above = $\underline{\underline{27.59\ 'k}}$

Span 2:

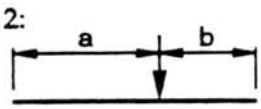

$$b = \frac{4}{3}(12.79\text{ ft}) - 14 = \underline{\underline{3.05\text{ ft}}}$$

$$a = 12.79 - 3.05 = \underline{\underline{9.74\text{ ft}}}$$

$$\text{Lt: } \frac{Pb^2a}{\ell^2}+\frac{w\ell^2}{12}$$

$$=\frac{10.17(3.05)^2\times 9.74}{12.79^2}+8.32$$

$$= 5.63 + 8.32 = \underline{\underline{13.95\ 'k}}$$

$$\text{Rt: } \frac{pa^2b}{\ell^2}+\frac{w\ell^2}{12}$$

$$= 17.99 + 8.32 = \underline{\underline{26.30\ 'k}}$$

SBM

Roof: (L @ $\ell/2$)

$$\frac{P\ell}{4}+\frac{w\ell^2}{8}$$

$$= 2\,(FEM_p) + 1.5\,(FEM_w)$$

$$= 32.52 + 12.48 = \underline{\underline{45.00\ 'k}}$$

(L @ $\ell/3$)

$$\frac{2P\ell}{9}+\frac{w\ell^2}{9}$$

$$= 28.91 + 11.08 = \underline{\underline{40.00\ 'k}}$$

(L @ $2\ell/3$)

Span 1:

Same as @ $\ell/3$ = $\underline{\underline{40.00\ 'k}}$

Span 2:

$$\frac{Pab}{\ell}+1.5\,(FEM_w)\left\{1-\left(\frac{\ell/2-a}{\ell/2}\right)^2\right\}$$

$$=\frac{10.17\times 9.74\times 3.05}{12.79}+12.48\left[1-\left(\frac{-3.35}{6.39}\right)^2\right]$$

$$= 23.62 + 9.07 = \underline{\underline{32.69\ 'k}}$$

FEM	SBM
Walls: (100%)	Walls: (100%) @ midspan
top: $\frac{p_t \ell^2}{12} + \frac{\Delta p h^2}{30}$	$\frac{p_t \ell^2}{8} + \frac{\Delta p h^2}{16}$
$= \frac{0.50(12.83)^2}{12} + \frac{2.70(12.83)^2}{30}$	$= 1.5\ (FEM_p) + 1.25\ (FEM_{\Delta p,bottom})$
$= 7.00 + 14.81 = \underline{\underline{21.81'k}}$	$= 1.5\ (7.00) + 1.25\ (22.22)$
	$= 10.50 + 1.25\ (22.22)$
btm: $\frac{P_t \ell^2}{12} + \frac{\Delta p h^2}{20}$	$= 10.50 + 27.77 = \underline{\underline{38.27\ 'k}}$
$= 7.0 + 1.5\ (14.81)$	
$= 7.0 + 22.22 = \underline{\underline{29.22\ 'k}}$	
(30%)	(30%)
top: $0.3\ (7.0) + 0.3\ (14.81)$	$0.3\ (10.50) + 0.3\ (27.77)$
$= 2.1 + 4.44 = \underline{\underline{6.54\ 'k}}$	$= 3.15 + 8.33 = \underline{\underline{11.48\ 'k}}$
btm: $2.1 + 0.3\ (22.22)$	
$= 2.1 + 6.67 = \underline{\underline{8.77\ 'k}}$	
Invert: (one wheel)	Invert: (one wheel)
$\frac{w_L \ell^2}{12} + \frac{w_D \ell^2}{12}$	$= 1.5\ (FEM_L) + 1.5\ (FEM_D)$
$= \frac{0.22(12.79)^2}{12} + \frac{0.86(12.79)^2}{12}$	$= 1.5\ (3.00) + 1.5\ (11.72)$
$= 3.00 + 11.72 = \underline{\underline{14.72\ 'k}}$	$= 4.50 + 17.58 = \underline{\underline{22.08\ 'k}}$
(two wheels)	(two wheels)
$2(3.00) + 11.72 = \underline{\underline{17.72\ 'k}}$	$2\ (4.50) + 17.58$
	$= 9.00 + 17.58 = \underline{\underline{26.58'k}}$

Distribution factors:

Relative Stiffness is Proportional to t^3/ℓ:

roof:	$10^3/12.79$	=	78.186		43%	
walls:	$11^3/12.83$	=	103.741	103.741	57%	57%
Invert:	$10^3/12.79$	=		78.186		43%
			181.927	181.927		

Moment Distribution

Loading 2A

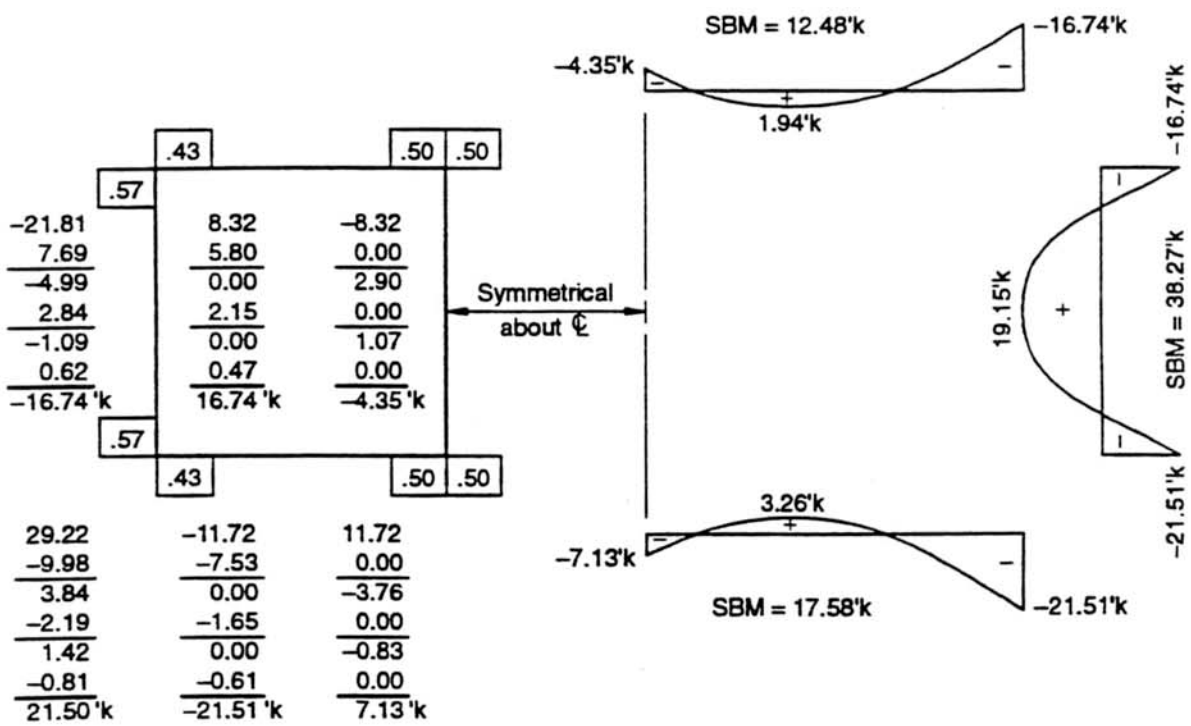

Loading 1c (unsymmetrical live load)

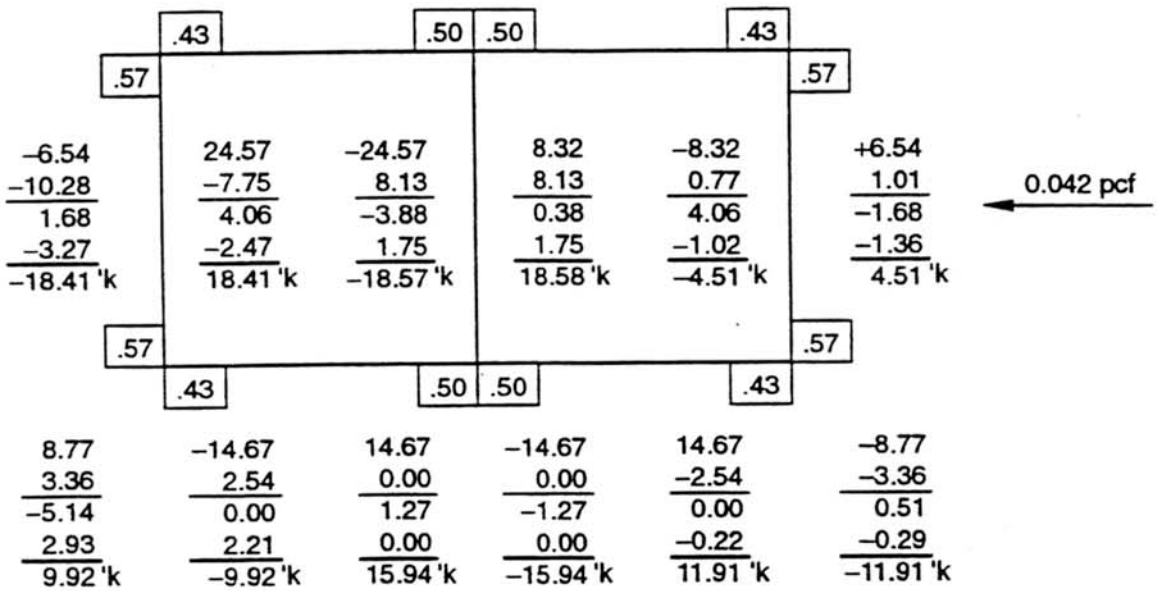

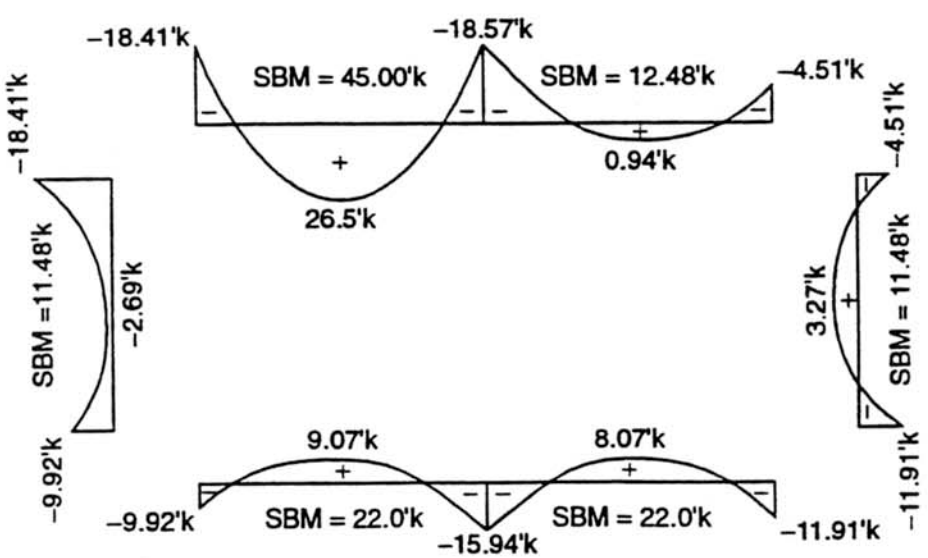

Loading 2b (symmetrical live load)

Check distance between wheels → $d = \frac{4}{3}(12.79\text{ ft}) = 17.05\text{ ft} \geq 14\text{ ft}$

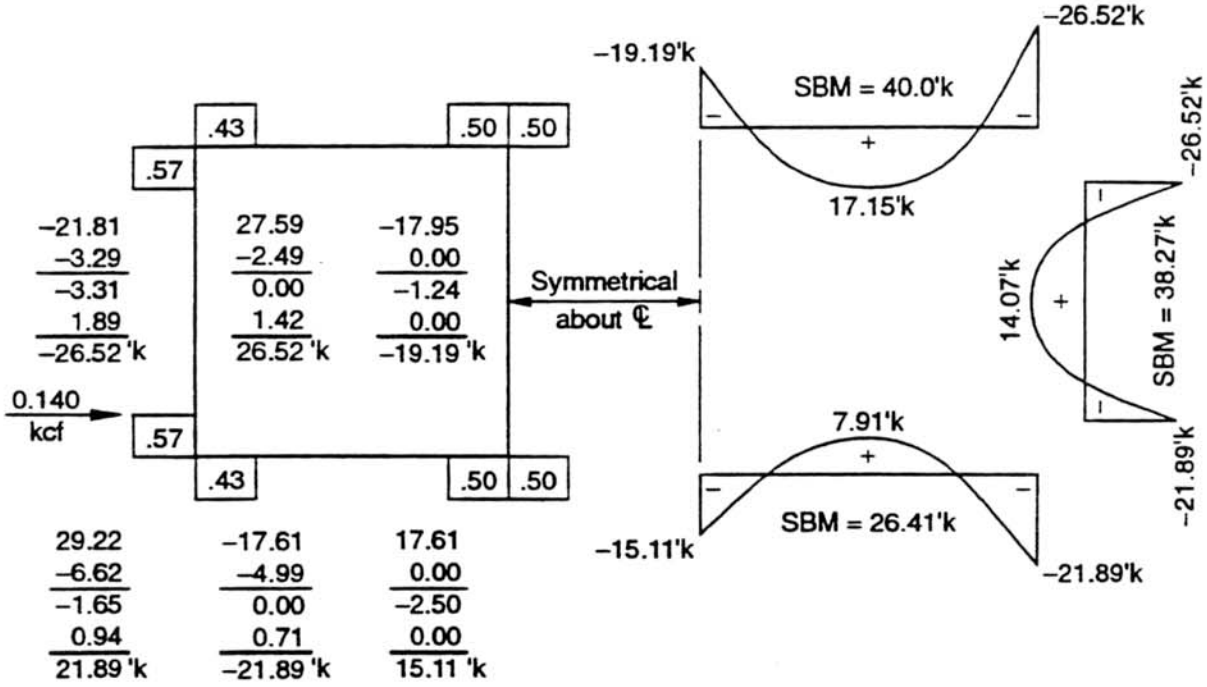

Loading 1b (unsymmetrical live load)

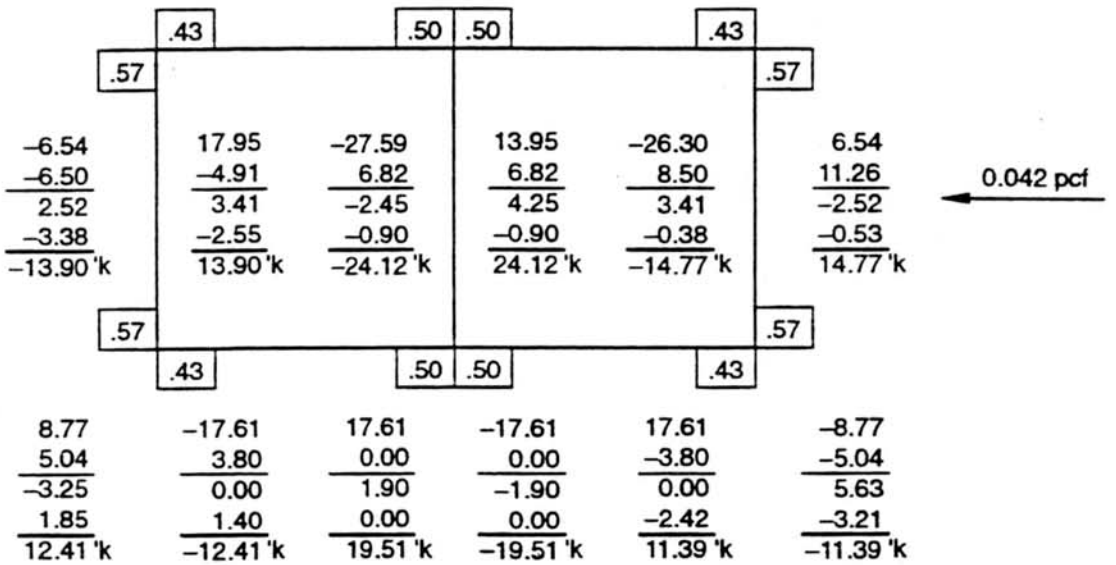

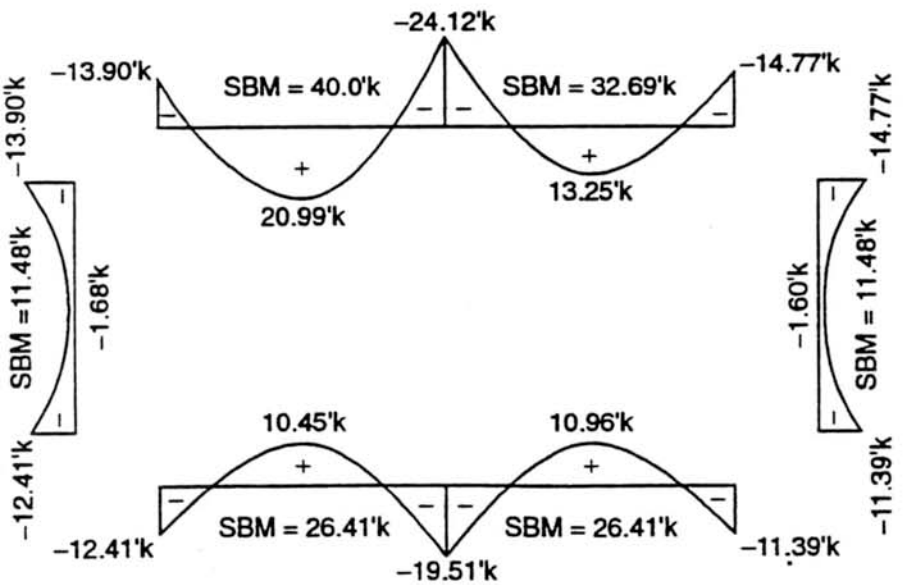

3. Loads – Condition 2 – (10 ft Cover)

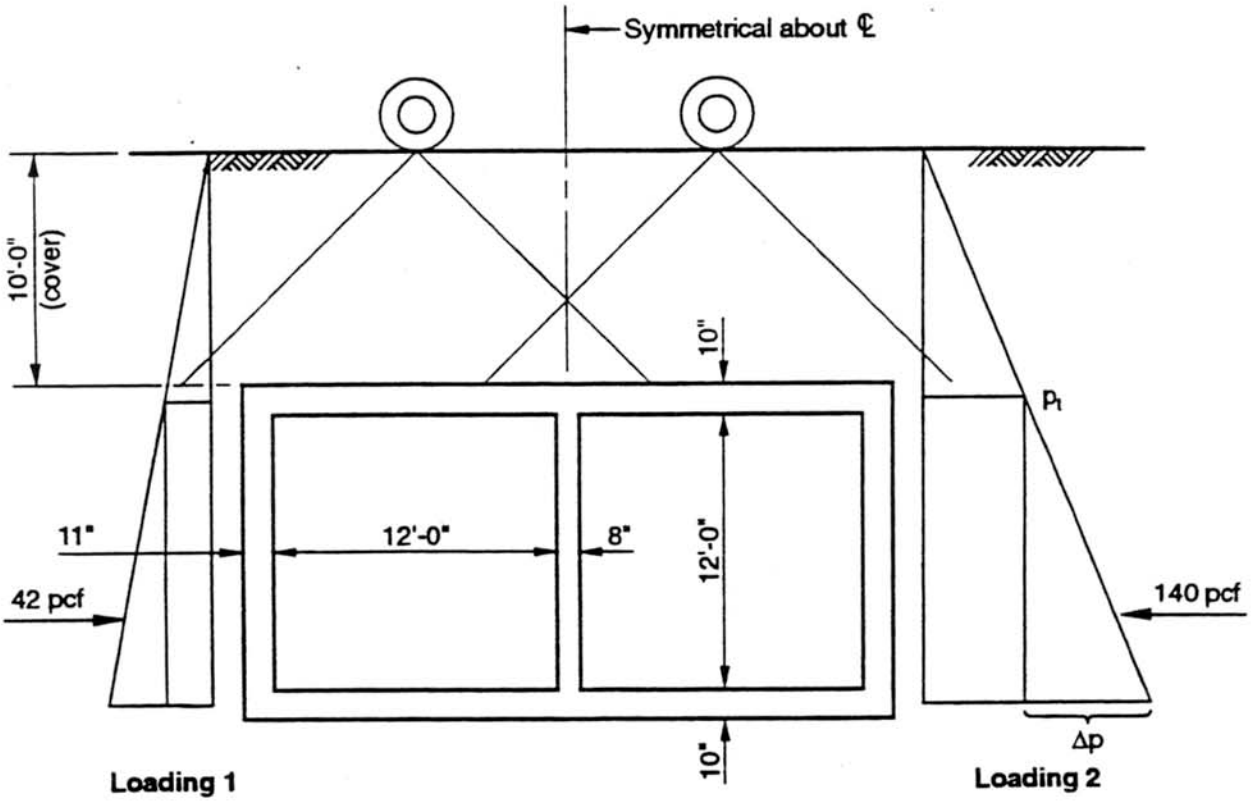

Where:

LRF	=	Lane Reduction factor (see *BDS Section 3.12.1*)
H	=	10 ft Earth Cover
L	=	Uniform Live Load
I	=	Impact, (when H > 3.0 ft, I = 0.0)
D	=	Dead Load

Pressures (factored):

Roof

$$w_L = \text{one truck} = \frac{16\,{}^{k}/_{wheel} \times 2\,{}^{wheels}/_{axle} \times 2\,{}^{axle}/_{truck} \times 2.5}{(1.75H+6)(1.75H+14)} = 0.22\text{ ksf}$$

$$= \text{two trucks} = \frac{16k(2)(2)(2\text{lanes})2.5}{(1.75H+16)(1.75H+14)} = \underline{\underline{0.30\text{ ksf}}}\ \text{controls}$$

$$= \text{three trucks} = \frac{16k(2)(2)(3\text{lanes})(2.5)0.9}{(1.75H+28)(1.75H+14)} = 0.30\text{ ksf}$$

$$w_E = 10\text{ ft} \times 0.14\text{ kcf} \times 1.5 = 2.10\text{ ksf}$$

$$w_D = \frac{10\text{ in}}{12} \times 0.15\text{ kcf} \times 1.5 = 0.19\text{ ksf}$$

$$w_{roof} = w_E + w_D = \underline{\underline{2.29\text{ ksf}}}$$

Walls – (outer @ center line of support slabs)

$$140\text{ pcf}\begin{cases} p_t = [10\text{ft} + 10\text{in} / (2 \times 12\text{in / ft})] \times 0.14\text{kcf} \times 1.5 = 2.19\text{ksf} \\ \Delta p = \left[12 + \dfrac{(10\text{in} + 10\text{in})}{2 \times 12}\right] \times 0.14\text{kcf} \times 1.5 \qquad = 2.70\text{ksf} \end{cases}$$

$$42\text{ pcf}\begin{cases} p_t = 0.3 \times 2.188\text{ ksf} = 0.66\text{ ksf} \\ \Delta p = 0.3 \times 2.695\text{ ksf} = 0.81\text{ ksf} \end{cases}$$

Invert:

$$w_{Walls} = \frac{[12[(2 \times 11) + 8] / 12^{\text{in/ft}}](0.15)(1.5)}{([(2 \times 11) + 8] / 12) + (2 \times 12)} = 0.26\text{ ksf}$$

$$w_L = 0.30\text{ ksf}$$

$$w_D = w_{Walls} + w_{roof} = \underline{\underline{2.55\text{ ksf}}}$$

Member Lengths:

$$\ell_{roof} = 12 + \left(\frac{11+8}{2+12}\right) = 12.79 \text{ ft}$$

$$\ell_{invert} = \ell_{roof} = 12.79 \text{ ft}$$

$$h_{wall} = 12 + \left(\frac{10+10}{24}\right) = 12.83 \text{ ft}$$

Loadings:

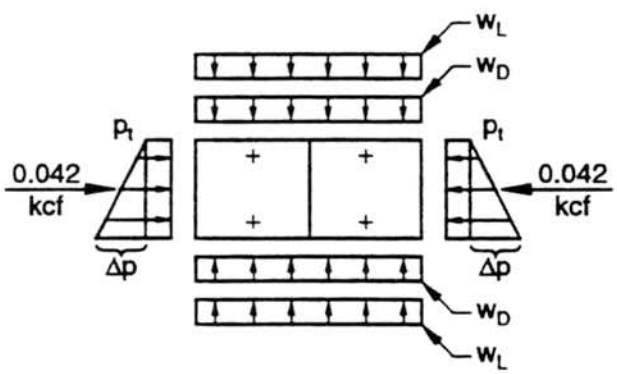

(max + M roof & invert)

Loading 1b

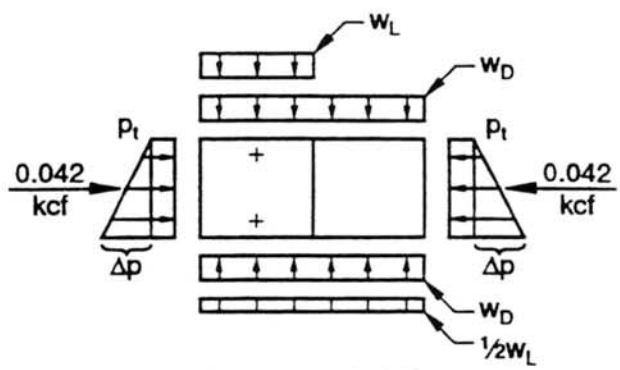

(Unsymmetrical L)
(max + M roof)
Loading 1c

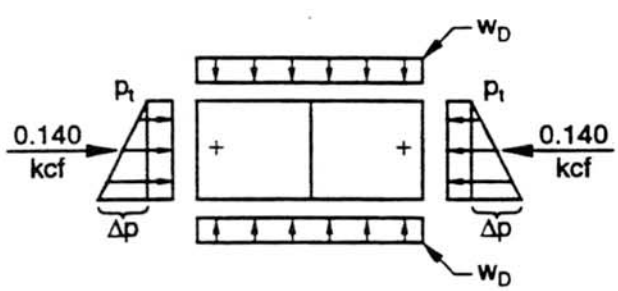

(max + M wall)
(w/o L)
Loading 2a

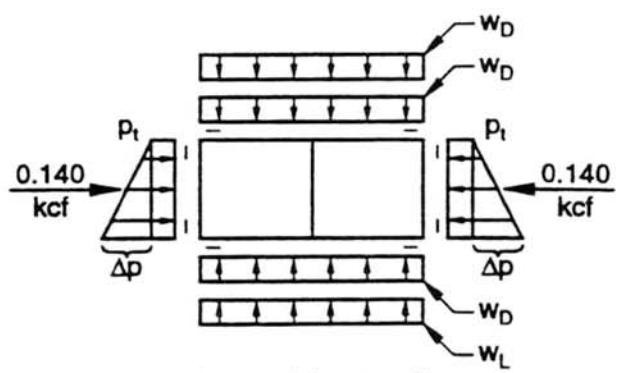

(max – M ext. wall)

Loading 2b

FEM	SBM
Roof: (Uniform Live Load)	Roof: (Uniform Live Load)
$\frac{w_L \ell^2}{12} + \frac{w_D \ell^2}{12}$	$\frac{w_L \ell^2}{8} + \frac{w_D \ell^2}{8}$
$= \frac{0.30(12.79)^2}{12} + \frac{2.29(12.79)^2}{12}$	$= \frac{0.30(12.79)^2}{8} + \frac{2.29(12.79)^2}{8}$
$= 4.09 + 31.22 = \underline{\underline{35.31'k}}$	$= 6.13 + 46.83 = \underline{\underline{52.96'k}}$
Walls: (100%)	Walls: (100%)
top: $\frac{P_t h^2}{12} + \frac{\Delta p h^2}{30}$	@ mid height: $\frac{P_t h^2}{8} + \frac{\Delta p h^2}{16}$
$= \frac{(2.19)(12.83)^2}{12} + \frac{(2.70)(12.83)^2}{30}$	$= 1.5\ (FEM_{p_t}) + 1.25\ (FEM_{\Delta p_{BTM}})$
$= 30.04 + 14.81 = \underline{\underline{44.86'k}}$	$= 1.5\ (30.04) + 1.25\ (22.22)$
btm: $\frac{p_t h^2}{12} + \frac{\Delta p h^2}{20}$	$= 45.06 + 27.78 = \underline{\underline{72.84'k}}$
$= 30.04 + 1.5\ (14.81)$	
$= 30.04 + 22.22 = \underline{\underline{52.26'k}}$	
(30%)	(30%)
top: $0.3\ (30.04) + 0.3(14.81)$	@ mid height:
$= 9.01 + 4.44 = \underline{\underline{13.45'k}}$	$0.3\ (45.06) + 0.3\ (27.78)$
btm: $0.3\ (30.04) + 0.3\ (22.22)$	$= 13.52 + 8.33 = \underline{\underline{21.85'k}}$
$= 9.01 + 6.67 = \underline{\underline{15.68'k}}$	
Invert:	Invert:
$\frac{w_L \ell^2}{12} + \frac{w_D \ell^2}{12}$	$1.5\ (4.09) + 1.5\ (34.63)$
$= \frac{0.30(12.79)^2}{12} + \frac{2.54(12.79)^2}{12}$	$= 6.14 + 51.94 = \underline{\underline{58.08'k}}$
$= 4.09 + 34.63 = \underline{\underline{38.71'k}}$	

Distribution Factors:

Relative Stiffness is Proportional to t^3 / ℓ:

Roof:	$10^3/12.79 =$	78.186		43%	
Walls:	$11^3/12.83 =$	103.741	103.741	57%	57%
Invert:	$10^3/12.79 =$		78.186		43%
		181.927	181.927		

Moment Distribution:

The following load cycles are the minimum number required to find all of the controlling member moments. Use more load cycles if warranted.

Loading 2a (symmetrical loading) D Only

			.43	.50	.50
	−44.86	.57	+31.22	−31.22	
	7.75		5.85	0.00	
	−5.02		0.00	2.92	
140 pcf →	2.86		2.16	0.00	
	−1.11		0.00	1.08	
	0.63		0.48	0.00	
	−0.41		0.00	0.24	
	0.23		0.18	0.00	
	−39.89 'k	.57	39.89 'k	−26.98 'k	
			.43	.50	.50
	+52.26		−34.63	+34.63	
	−10.05		−7.58	0.00	
	3.88		0.00	−3.79	
	−2.21		−1.67	0.00	
	1.43		0.00	−0.83	
	−0.82		−0.61	0.00	
	0.32		0.00	−0.31	
	−0.18		−0.14	0.00	
	44.63 'k		−44.63 'k	29.70 'k	

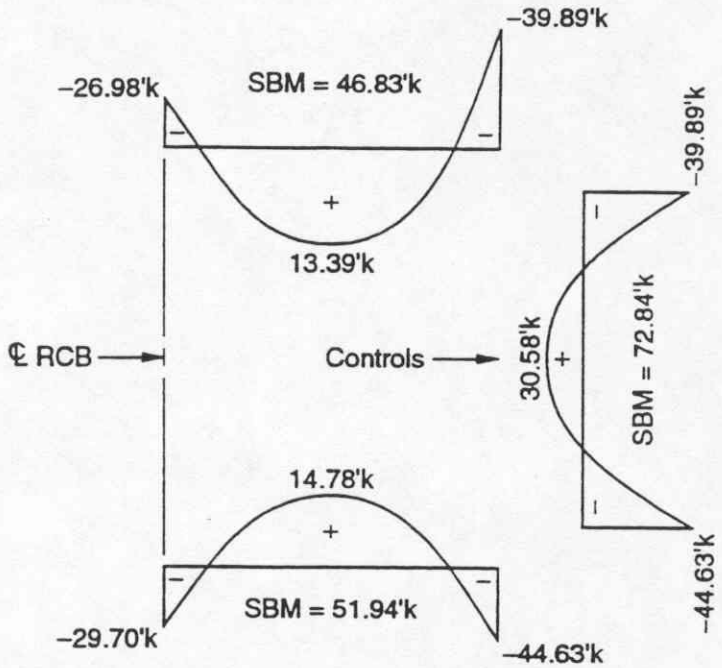

Loading 2 b (symmetrical loading)

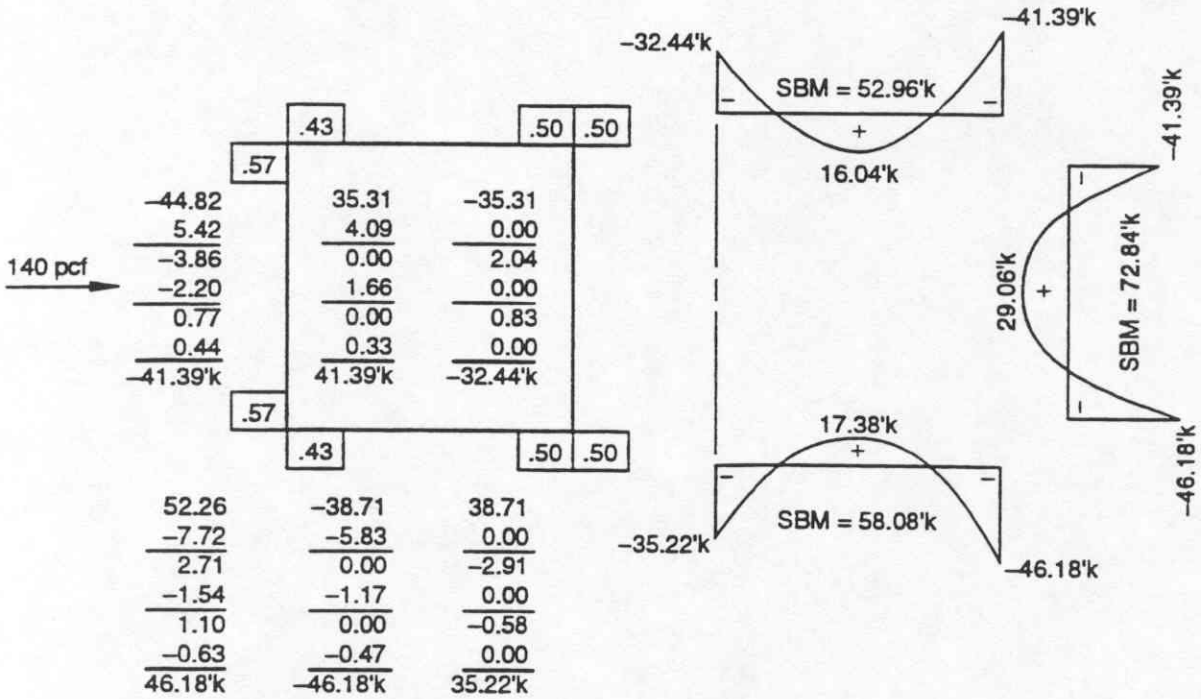

Loading 1b (symmetrical loading)

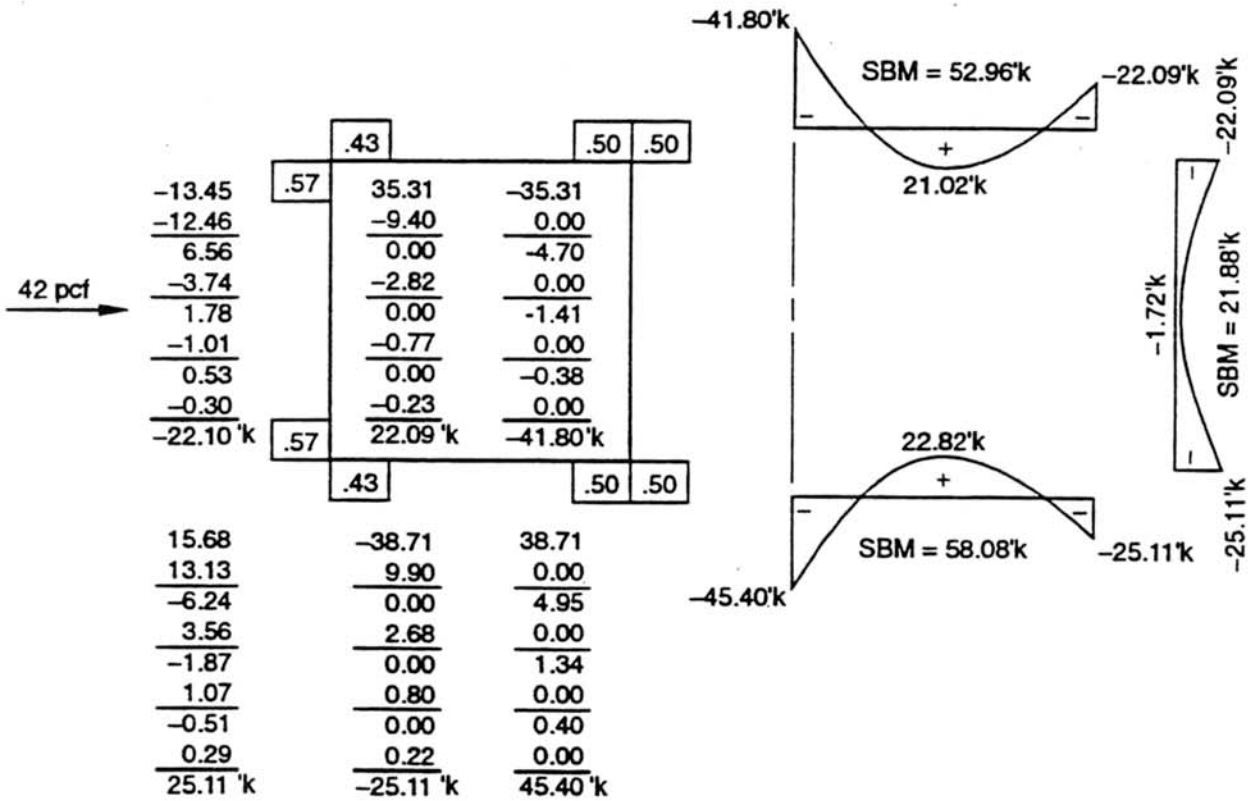

Loading 1c (unsymmetrical live load)

	.43	.50	.50	.43	
.57					.57
−13.45	35.31	−35.31	31.22	−31.22	13.45
−12.46	−9.40	2.04	2.04	7.64	10.13
5.98	1.02	−4.70	3.82	1.02	−5.98
−3.99	−3.01	0.44	0.44	2.13	2.83
1.78	0.22	−1.51	1.07	0.22	−1.44
−1.14	−0.86	0.22	0.22	0.52	0.70
−23.28 'k	23.28 'k	−38.82 'k	38.82 'k	−19.69 'k	19.69 'k
.57					.57
	.43	.50	.50	.43	

15.68	−36.67	36.67	−36.67	36.67	−15.68
11.96	9.03	0.00	0.00	−9.03	−11.96
−6.23	0.00	4.51	−4.51	0.00	5.06
3.55	2.68	0.00	0.00	−2.18	−2.88
−2.00	0.00	1.34	−1.09	0.00	1.41
1.14	0.86	−0.13	−0.13	−0.61	−0.80
24.10 'k	−24.10 'k	42.39 'k	−42.40 'k	24.85 'k	−24.85 'k

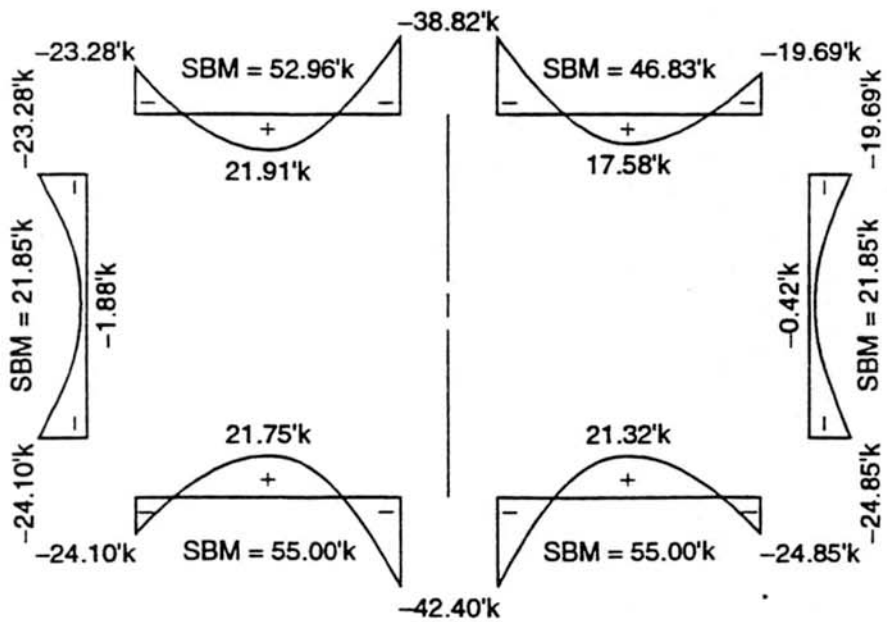

4. Section by Shear

Note: Do not check shear in roof for 2 ft cover condition, see *Bridge Design Specifications* 3.24.4. Shear is controlled by 10 ft earth cover.

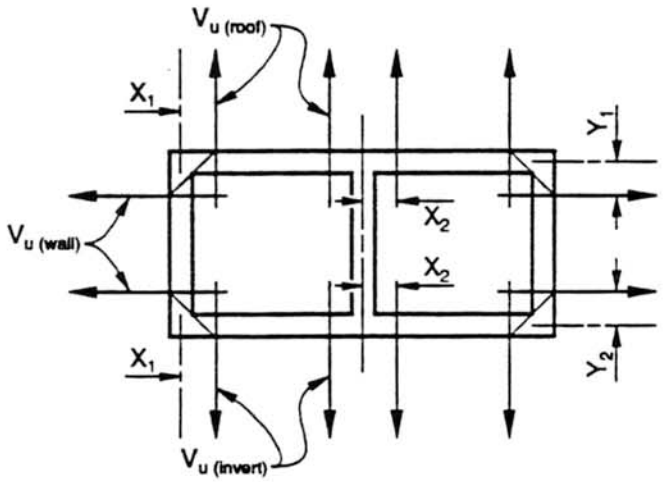

Roof and Invert

$$x = \frac{t_{wall}}{2} + d$$

$\therefore X_1 = 5.5 \text{ in.} + (10 - 2.5) = 13 \text{ in.}$
$\& \ X_2 = 4 \text{ in.} + (10 - 2.5) = 11.5 \text{ in.}$

Wall:

$$Y_1 = \frac{t_{roof}}{2} + d = 13.5 \text{ in.}$$

$$Y_2 = \frac{t_{invert}}{2} + d = 13.5 \text{ in.}$$

Roof:

$$V_{ult} = \left[\frac{(w\ell)}{2} - wx\right] + \frac{\Sigma(DEM)}{\ell}; \text{ DEM = Distributed End Moments}$$

$$= \frac{(0.30 + 2.29)(12.79)}{2} - (2.59)(11.5/12) + \frac{(41.80 - 22.09)}{12.79} = 15.62\text{k}$$

$$v_{allow} = 3.5\sqrt{f_c'} = 3.5\sqrt{3250} \approx 200 \text{ psi} = 0.2 \text{ ksi}$$

$$d_{req'd} = \frac{V_{ult}}{bv_{max}} = \frac{15.62}{12(0.2)} = 6.51 \text{ in.} < [10 \text{ in.} - 2.5 \text{ in.} = 7.5 \text{ in.}] \therefore \text{OK}$$

Invert:

$$V_{ult} = \left[\frac{(w\ell)}{2} - wx\right] + \frac{\Sigma(DEM)}{\ell}$$

$$= \frac{(0.30 + 2.54)(12.79)}{2} - (2.84)(11.5/12) + \frac{(45.40 - 25.11)}{12.79}$$

$$= 18.16 - 2.72 + 1.59 = 17.03\text{'k}$$

$$d_{req'd} = \frac{V_{ult}}{bv_{max}} = \frac{17.03}{12(0.2)} = 7.10 \text{ in.} < 7.5 \text{ in.}$$

Wall:

$$v_{u,top} = h\left(\frac{P_t}{2}+\frac{\Delta P}{6}\right) - Y_1(P_t) - \frac{\Delta P Y_1^2}{2h} + \frac{\Sigma(DEM)}{h}$$

$$v_{u,bottom} = P_t(h-Y_2) + \Delta p(h-Y_2)^2(2h)^{-1} - h\left(\frac{P_t}{2}+\frac{\Delta p}{6}\right) + \frac{\Sigma(DEM)}{h}$$

$$= 2.19\left(12.83-\frac{13.5}{12}\right) + 2.70\left(12.83-\frac{13.5}{12}\right)^2(2\times 12.83)^{-1}$$

$$-12.83\left(\frac{2.19}{2}+\frac{2.70}{6}\right) + \frac{(24.85-19.69)}{12.83}$$

$$= 25.63 + 14.42 - 19.82 + 0.40 = 20.63k$$

$$d_{req'd} = \frac{v_u}{bv_{max}} = \frac{20.63}{12(02)} = 8.60 \text{ in.} > 8.5 \text{ in.} \therefore \text{NG}$$

∴ Need to increase wall thickness or add shear reinforcement in actual design practice. The required increase in wall thickness or the addition of shear reinforcement will be ignored in this design example, which is for illustrative purposes.

5. *Reinforcement by Ultimate Moment*

(Note: A_s units are sq. in. per foot):

Maximum Member Moments (ft-kips)					
Member	Condition	Loading	Location	$+M_{max}$	$-M_{max}$
roof	1	1c	@ centerline span	26.5	
roof	2	1b	@ centerline RCB		41.80
wall	2	2a	@ mid-height	30.58	
wall/roof	2	2b	@ top		41.39
wall/invert	2	2b	@ btm		46.18
invert	2	1b	@ centerline span	22.82	
invert/wall	2	1b	@ centerline RCB		45.40

Designs:

$f'_c = 3250$ psi; $f_y = 60$ ksi

$A_{s\,max} = \rho_{max}\,bd = 0.0174\,bd$

$A_{s\,design} = \dfrac{0.25M_u}{d}$ and $d_{req'd} = \sqrt{1.2M_u}$

Roof:

(Thickness is controlled by negative M @ centerline RCB)

$d = 10$ in. $- 2$ in. clearance $- \dfrac{1}{2}$bar diameter $= 10$ in. $-2 - \dfrac{1\text{ in}}{2} = 7.5$ in.

$d_{req'd} = \sqrt{1.2(41.80)} = 7.1$ in. < 7.5 in. $\therefore$ OK

$-$ ve mom. $A_{s,\,roof} = \dfrac{0.25(41.80)}{7.5} = 1.39$

$\therefore$ use: #7 and #6 @ 8½ in. max (space @ 4¼ in. max o.c.)

$A_s = \dfrac{(0.6+0.44)(12)}{8.5} = 1.47 > 1.39$

$A_{smax} = 0.0174\,(12)\,(7.50) = 1.57 \therefore$ OK

$+$ ve mom. $A_{s,roof} = \dfrac{0.25(26.5)}{7.5} = 0.88$ in.^{2}

$\therefore$ use #4 and #7 @ 8½ in. max (space @ 4¼ in. max o.c.)

$As = \dfrac{(0.60+0.2)(12)}{8.5} = 1.13 > 0.88$

$\therefore$ OK

Wall:

(Thickness controlled by negative M @ btm)

$d_{invert} = d_{roof} = 10$ in. -2.5 in. $= 7.5$ in.

$d_{wall} = 11$ in. -2.5 in. $= 8.5$ in.

$d_{req'd} = \sqrt{1.2(46.18)} = 7.4$ in. < 8.5 in. $\therefore$ OK

$$A_{s\,top} = \frac{0.25(41.39)}{7.5} = 1.38$$

$\therefore$ #7 and #6 @ 8½ in. max (space @ 4¼ in. max o.c.)

$$A_s = \frac{(0.6+0.44)(12)}{8.5} = 1.47 > 1.38 \therefore \text{ OK}$$

$$A_{s\,max} = 1.57 > 1.47 \therefore \text{ OK}$$

$$A_{s\,mid} = \frac{0.25(30.58)}{8.5} = 0.90$$

$\therefore$ #5 @ 4¼ in. max o.c.

$$A_s = \frac{0.31(12)}{4.25} = 0.88 < 0.90 \text{ by about 2.7\% Say OK } \therefore \text{ \% difference } < 5\%$$

$$A_{s\,btm} = \frac{0.25(46.18)}{7.5} = 1.54$$

$\therefore$ #7 and #6 @ 8½ in. max (space @ 4¼ in. max o.c.)

$$A_s = \frac{(0.6+0.44)}{8.5} = 1.47 < 1.54 \text{ by about 4.6\% Say OK } \therefore \text{ \% difference } < 5\%$$

Invert:

(Thickness controlled by negative M_{btm} wall)

$$d_{invert} = 7.5 \text{ in. ; } d_{req'd} = 7.4 < 7.5 \therefore \text{ OK}$$

$$+\text{ve mom. } A_{s,\,invert} = \frac{0.25(22.82)}{7.5} = 0.76$$

$\therefore$ use #4 and #7 @ 8½ in. max (space @ 4¼ in. max o.c.)

$$A_s = \frac{(0.2+0.60)(12)}{8.5} = 1.13 > 0.76 \therefore \text{OK}$$

$$-\text{ve mom. } A_{s,\,invert} = \frac{0.25(46.18)}{7.5} = 1.54$$

$\therefore$#7 and #6 @ 8½ in. max (space @ 4¼ in. max o.c.)

$$A_s = \frac{(0.6+0.44)(12)}{8.5} = 1.47 < 1.54 \text{ by 4.6\% say OK } \therefore \text{ \% difference } < 5\%$$

Notes To Designers

1. The use of reinforcing bars larger than #8's should be avoided. The bending radius required for a #9 or larger is very large and would require large concrete corner fillets to maintain the required design "d".
2. When member thickness changes are greater than ¼ of an inch, the design calculations should be recycled.

6. Distribution Reinforcement: (Ref. BDS 3.24.10)

$$\text{Amount} = \frac{100}{\sqrt{S}} = \frac{100}{\sqrt{12\text{ in}}} = 28.9\% < 50\% \text{ max}$$

max. Pos. $A_{s\,max}$ = 0.88

(for 2 ft cover) $\times 0.29$

$A_{s\,distribution}$ = 0.25

Find: #4 req'd

$$\#4\text{ req'd} = \frac{A_{s\,dist}}{A_{\#4}} \times \frac{\text{span}}{2} = 7.5$$

$$= \frac{0.25}{0.2} \times \frac{12}{2} = 7.5$$

∴ use 8 #4 over middle half span

Design Temperature/Shrinkage Reinforcement

$A_{s\,req}$ = ⅛ in.^{2} = 0.125 in.^{2} (BDS 8.20.1)

$$\left.\begin{aligned} s_{min} &= 3(10\text{ in}) = 30\text{ in} \\ &\quad 18\text{ in} \leftarrow \text{controls} \end{aligned}\right\} \text{(BDS 8.20.2)}$$

$$\text{use \#4 @ 18 in.} = \frac{0.20\text{ in}^2(12\text{ in})}{18\text{ in}}$$

$$= 0.133\text{ in.}^2 > 0.125\text{ in.}^2 \text{ OK}$$

7. *Load Moment Envelopes:*

Assume:

1. If the moment distribution was done for all possible live load loadings along the roof of the RCB Culvert with 2 feet earth cover or less, the maximum Live Load moment envelope would be a parabola.
2. The maximum positive moments are at mid-span.
3. The moment envelope for the exterior walls is a parabola.
4. We use the following information from a parabola to plot 2 additional points of the maximum and minimum moment envelopes at the ¼ span:

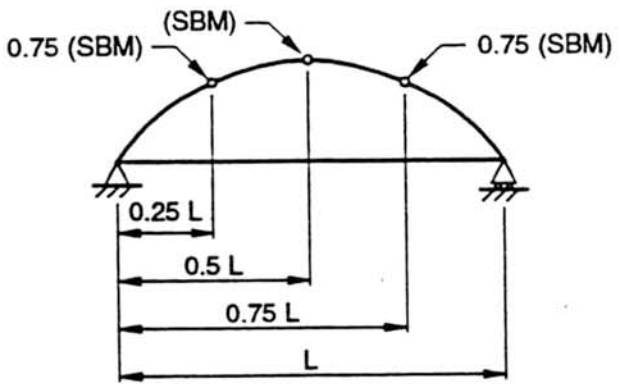

Parabola

8. *Reinforcement Lengths*

Bar Extensions: (See BDS 8.24)

Tension Zone	Free Zone
d $15d_b$ S/20	*d* $15d_b$ S/20

Determine Negative Moment Reinforcement Cut-off Lengths

$M_u = 5 A_s d (1 - 11p)$; $p = A_s/bd$

Roof and Invert:

#6 @ 8.5"; M = 5 (0.62) 7.5 (1 - 11 (0.0069))
= 21.48 ft-kips

#6 & #7 @ 8.5"; M = 5 (1.47) 7.5 (1 - 11 (0.0163))
= 45.23 ft-kips

Walls:

#7 @ 8.5"; M_u = 5 (0.85) 8.5 (1 - 11 (0.0083))
= 32.81 ft-kips

#6 & #7 @ 8.5"; M_u = 5 (1.47) 8.5 (1 - 11 (0.0144))
= 52.58 ft-kips

Negative Moment Envelope
Scale: (Moment) 1" = 30 ft-kips

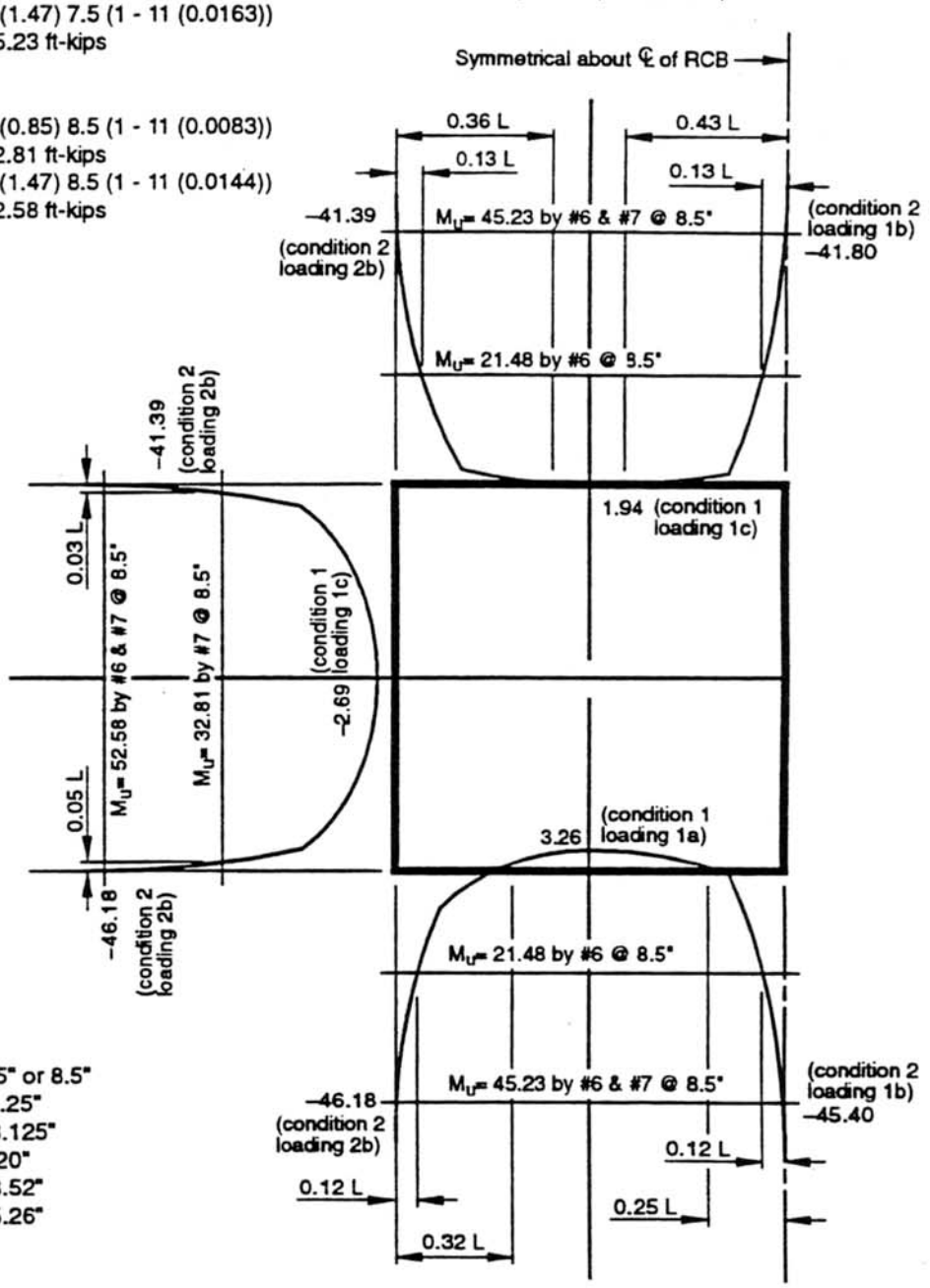

Members:

d	= 7.5" or 8.5"
#6; 15 bar dia.	= 11.25"
#7; 15 bar dia.	= 13.125"
S/20	= 7.20"
#6; ℓ_d	= 18.52"
#7; ℓ_d	= 25.26"

Calculate Bar Cutoffs (corners)

Roof:

6 @ 8.5 in. : $0.13\ (L) + \ell_d$
$0.13\ (12.79)\ (12) + 18.52 = 38.47$ in.
$0.36\ (L) + 15$ bar dia.
$0.36\ (12.79)\ (12) + 11.25 = 66.50$ in. ← controls

$\ell = 66.50 + ½\ t_{wall} - \text{clearance}$
$= 66.50 + ½\ (11) - 2 = 70.00$ in.
use $\ell = 5$ ft – 10 in.

7 @ 8.5 in. : $\ell_d = 25.26$ in.
$0.13\ (L) + 15$ bar dia
$0.13\ (12.79)\ (12) + 13.125 = 33.0$ in. ← controls

$\ell = 33.08 + ½\ t_{wall} - \text{clearance}$
$= 33.08 + ½\ (11) - 2 = 36.58$ in.
use $\ell = 3$ ft – 1 in.

Wall (top):

7 @ 8.5 in. : to be continuous (lap splice 45 bar dia)

6 @ 8.5 in. : $\ell_d = 18.52$ in. ← controls
$0.03\ (L) + 15$ bar dia
$0.03\ (12.83)\ (12) + 11.25 = 15.87$ in.

$\ell = 18.52 + ½\ t_{roof} - \text{clearance}$
$= 18.52 + ½\ (10) - 2 = 21.52$ in.
use $\ell_d = 1$ ft –10 in.

Wall (Bottom):

7 @ 8.5 in. : to be continuous

6 @ 8.5 in. : $\ell_d = 18.52$ in.
$0.05\ (L) + 15$ bar dia
$0.05\ (12.83)\ (12) + 11.25 = 18.95$ in. ← controls

$\ell = 18.95 + ½\ t_{invert} - \text{clearance}$
$= 18.95 + ½\ (10) - 2 = 21.95$ in.
use $\ell = 1$ ft – 10 in.

Invert:

6 @ 8.5 in. :

$0.12\,(L) + \ell_d$

$0.12\,(12.79)\,(12) + 18.52 = 36.94$ in.

$0.32\,(L) + 15$ bar dia

$0.32\,(12.79)\,(12) + 11.25 = 60.36$ in. ← controls

$\ell = 60.36 + \frac{1}{2}\,t_{wall}$ — clearance

$60.36 + \frac{1}{2}\,(11) - 2 = 63.86$ in.

use $\ell = 5$ ft – 4 in.

7 @ 8.5 in. :

$\ell_d = 25.26$ in.

$0.12\,(L) + 15$ bar dia

$0.12\,(12.79)\,(12) + 13.125 = 31.54$ in. ← controls

$\ell = 31.54 + \frac{1}{2}\,t_{wall}$ – clearance

$31.54 + \frac{1}{2}\,(11) - 2 = 35.04$ in.

use $\ell = 3$ ft – 0 in.

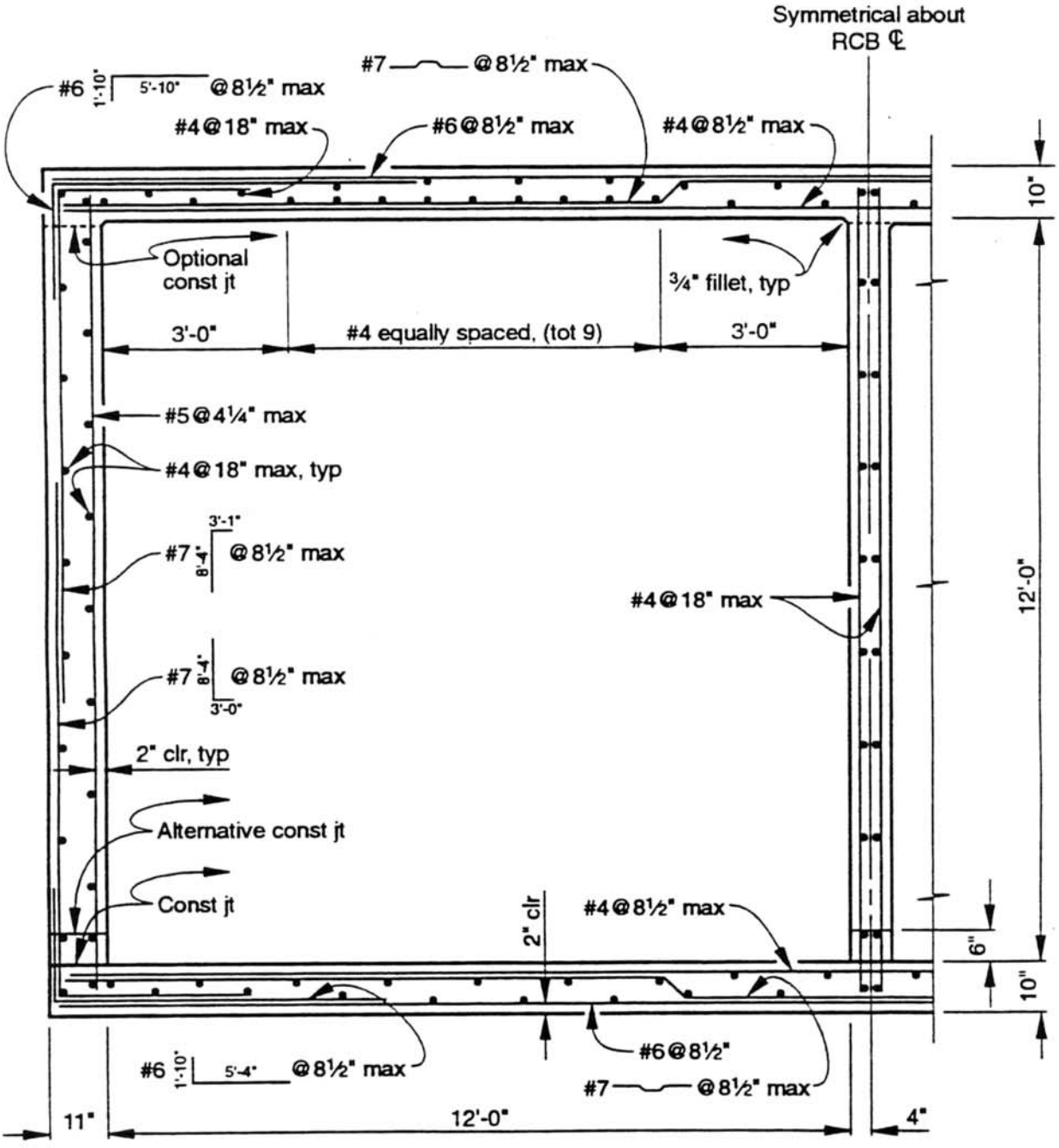

Partial Section
⅜" = 1'-0"

Note: The bar reinforcing details shown in this design example is slightly different than the steel details shown on Standard Plan D81.

Appendix

A.R.E.A. Railroad Loads

Bridge Design Specifications Manual, (BDS):

3.1	Notations
3.22	Combinations of Loads
3.24	Distribution of Loads and Design of Concrete Slabs
4.2	Bearing Capacity of Foundation Soils
6.2	Dead Loads
6.3	Footings
6.4	Distribution of Wheel Loads Through Earth Fills
8.1.2	Notations
8.2	Concrete
8.3	Reinforcement
8.16	Strength Design Method (Load Factor Design)
8.17	Reinforcement of Flexural Members
8.20	Shrinkage & Temperature Reinforcement
8.21	Spacing Limits For Reinforcement
8.22	Protection Against Corrosion
8.23	Hooks and Bends
8.24	Development of Flexural Reinforcement
8.25	Development of Deformed Bars in Tension
8.32	Splices of Reinforcement
17.1	General
17.3	Load Factor Design
17.6	Reinforced Concrete Box, Cast-In-Place

Highway Design Manual:

829.2 Bedding and Backfill

Standard Plans: (1992 Ed.)

D80	Cast-In-Place Reinforced Concrete Single Box Culvert
D81	Cast-In-Place Reinforced Concrete Double Box Culvert
D82	Cast-In-Place Reinforced Concrete Box Culvert Miscellaneous Details