Section 3 – Prestressed Concrete Design

Contents

Notations and Abbreviations **3-1**

3.0.0 Preface **3-4**

3.1.0 Introduction - Basic Theory and Principles **3-4**

3.1.1 Definitions 3-5
3.1.2 Advantages of Prestressed Concrete 3-6
3.1.3 Disadvantages of Prestressed Concrete 3-6
3.1.4 Prestressing Force 3-7
3.1.5 Formulas for Design 3-7
3.1.6 Allowable Stresses 3-9
3.1.7 Design Theory 3-11
3.1.8 Design Parameters 3-11
3.1.9 Assumptions 3-12
3.1.10 Design 3-12
3.1.11 Load Factors 3-12
3.1.12 Strength Reduction Factors 3-12

3.2.0 Design of a Simple Span Prestressed Precast "I" Girder Bridge **3-13**

3.2.0.1 Design example 3-14
3.2.1 Design - Cross Section, Pretension 3-17
3.2.2 Design - Net/Transformed Section, Pretension 3-21
3.2.3 Design - Net/Transformed Section, Post-Tension 3-27
3.2.4 Ultimate Moment 3-27
3.2.5 Path of Prestressing Steel 3-29
3.2.6 Shear 3-30
3.2.7 Deflections 3-30

3.3.0 Design of an "I" Girder Continuous For Live Load 3-31

3.3.1 Negative Reinforcement 3-32
3.3.2 Summary 3-36

3.4.0 Design of a 2-Span Continuous Cast-In-Place Prestressed Box Girder 3-36

3.4.1 Introduction 3-36
3.4.2 Cross Sectional Geometry 3-36
3.4.3 Loads 3-39
3.4.4 Longitudinal Section 3-41
3.4.5 Losses 3-43
3.4.6 Force Coefficients 3-48
3.4.7 Secondary Moments 3-50
3.4.8 Prestress Force 3-59
3.4.9 Stresses 3-63
3.4.10 Concrete Strength Required 3-67
3.4.11 Ultimate Moment 3-67
3.4.12 Shear 3-74
3.4.13 BDS Computer Output 3-78

3.5.0 Design of a 4-Span Continuous Cast-in-Place Box Girder 3-103

3.5.1 Introduction 3-103
3.5.2 Bridge Configuration and Component Properties 3-103
3.5.3 Loads 3-105
3.5.4 Longitudinal Section 3-105
3.5.5 Losses 3-108
3.5.6 Force Coefficient 3-110
3.5.7 Secondary Moments 3-111
3.5.8 Prestress Shortening 3-114
3.5.9 Prestress Force 3-115
3.5.10 BDS Computer Output 3-121

Prestressed Concrete Design

Notations

A_b = bearing area of anchor plate of post-tensioning steel.

A_c = maximum area of the portion of the anchorage surface that is geometrically similar to and concentric with the area of the bearing plate of post-tensioning steel.

A_s = area of nonprestressed tension reinforcement.

A'_s = area of compression reinforcement.

A^*_s = area of prestressing steel.

A_{sf} = steel area required to develop the ultimate compressive strength of the overhanging portions of the flange.

A_{sr} = steel area required to develop the compressive strength of the web of a flanged section.

A_v = area of web reinforcement.

b = width of flange of flanged member or width of rectangular member.

b′ = width of web of a flanged member.

CR_c = loss of prestress due to creep of concrete.

CR_s = loss of prestress due to relaxation of prestressing steel.

CR_{sp} = loss of prestress due to relocation of post -tensioning steel.

c.g.c. = center of gravity of entire concrete section.

c.g.c.′ = center of gravity of transformed section.

c.g.s. = center of gravity of steel area.

D = effect of dead load.

D = nominal diameter of prestressing steel.

"D" = distance to centroid of prestress ducts as per *Memo to Designers 11–28*.

d = distance from extreme compressive fiber to centroid of the prestressing force, or to centroid of negative moment reinforcing for precast girder bridges made continuous.

ES = loss of prestress due to elastic shortening.

E_c = flexural modulus of elasticity of concrete.

E_s = modulus of elasticity of prestressing steel.

e = base of Naperian logarithms.

e = distance from center of gravity of section to the centroid of the cable path.

F_{bf} = resulting stress in bottom fiber – final.

F_{bi} = resulting stress in bottom fiber – initial.

F_{tf} = resulting stress in top fiber – final.

F_{ti} = resulting stress in top fiber – initial.

f_{ab} = concrete stress in bottom fiber due to W_a.

f_{at} = concrete stress in top fiber due to W_a.

f_{db} = concrete stress in bottom fiber due to W_d.

f_{dt} = concrete stress in top fiber due to W_d.

f_{cds} = average concrete compressive stress at the c.g. of the prestressing steel under full dead load.

f_{cir} = average concrete stress at the c.g. of the prestressing steel at time of release.

f'_c = compressive strength of concrete at 28 days.

f'_{ci} = compressive strength of concrete at time of initial prestress.

f_i = Initial concrete stress after transfer of prestress force.

f_f = Final stress under full design loads.

f_d = stress due to unfactored dead load, at extreme fiber of section where tensile stress is caused by externally applied loads. (not including stresses due to added dead load.)

f_{pc} = compressive stress in concrete (after allowance for all prestressed losses) at centroid of cross section resisting externally applied loads or at junction of web and flange when the centroid lies within the flange. (In a composite member, fp_c is resultant compressive stress at centroid of composite section, or at junction of web and flange when the centroid lies within the flange, due to both prestress and moments resisted by precast member acting alone.)

f_{pe} = compressive stress in concrete due to effective prestress forces only (after allowance for all prestress losses) at extreme fiber of section where tensile stress is caused by externally applied loads.

Δf_s = Total prestress loss, excluding friction.

f'_s = ultimate strength of prestressing steel.

f_{se} = effective steel prestress after losses.

f^*_{su} = average stress in prestressing steel at ultimate load.

f_{sy} = yield strength of nonprestressed conventional reinforcement in tension.

f'_y = yield strength of nonprestressed conventional reinforcement in compression.

f^*_y = yield point stress of prestressing steel.

h = overall depth of member.

I = moment of intertia about the centroid of the cross section.

I = impact load.

j = ratio of distance between centroid of compression and centroid of tension to the depth d.

K = friction wobble coefficient per foot of prestressing steel.

"k" = Clearance between top of deck and first prestressing duct as per *Memo to Designers 11-28.*

L = length of prestressing steel element from jacking end to point x.

M_{cr} = moment causing flexural cracking at section due to externally applied loads.

M_{max} = maximum factored moment at section due to externally applied loads.

M_n = nominal moment strength of a section.

M_s = secondary moment due to prestress force.

M_u = factored moment at section $\leq fM_u$.

M_{ua} = ultimate applied moment.

M_{ur} = ultimate resisting moment.

M'_{ur} = resisting moment of nonprestressed reinforcement (mild steel).

n = ratio of E_s/E_c.

P_f = effective prestress force after deduction of all losses.

P_i = initial prestress force immediately after anchoring steel.

P = A_s/bd, ratio of nonprestressed tension reinforcement.

P* = A^*_s/bd, ratio of prestressing steel.

P′ = A'_s/bd, ratio of compression reinforcement.

Q = statical moment of cross sectional area, above or below the level being investigated for shear, about the centroid.

SH = loss of prestress due to concrete shrinkage.

s = longitudinal spacing of web reinforcement.

T_o = steel stress at jacking end.

T_x = steel stress at point x.

t = average thickness of the flange of a flanged member.

v = permissible horizontal shear stress.
V_c = nominal shear strength provided by concrete.
V_{ci} = nominal shear strength provided by concrete when diagonal cracking results from combined shear and moment.
V_{cw} = nominal shear strength provided by concrete when diagonal cracking results from excessive principal tensile stress in web.
V_d = shear force at section due to unfactored dead load (not including added dead load shear).
V_i = factored shear force at section due to externally applied loads occurring simultaneously with M_{max}
V_P = vertical component of effective prestress force at section.
V_s = nominal shear strength provided by shear reinforcement.
V_{sec} = shear applied due to prestress secondary moments.
V_u = factored shear force at section.
W_a = live load or superimposed load applied after prestressing completed.
W_c = weight of concrete, lb. per cu. ft.
W_d = dead load acting at time of prestressing.
Y_b = distance from centroidal axis of gross section, neglecting reinforcement, to extreme fiber in compression.
Y_t = distance from centroidal axis of gross section, neglecting reinforcement, to extreme fiber in tension.
α = total angular change of prestressing steel profile in radians from jacking end of point x.
μ = friction curvature coefficient.
γ, β_D, β_L, β_{PS} = load factors.
ϕ = strength reduction factor.
q = rotation angle.

Abbreviations

BDA	*Bridge Design Aids*
BDD	*Bridge Design Details*
BDP	*Bridge Design Practice Manual*
BDS	*Bridge Design System Manual*
MTD	*Memos to Designers*
Spec.	*Bridge Design Specifications*

3.0.0 Preface

The subject of prestress concrete is very important within the Division of Structures by reason of the vast number of structures in the state which are designed using this technology.

Yet, the subject is not always a part of our new employees undergraduate studies. It is for that reason that "Basic Theory and Principles" along with definitions and assumptions are introduced early in this chapter. To illustrate design procedure, several example problems are worked through. Further study into prestress technology is encouraged.

Prestress technology has been a part of the Bridge Design Practice Manual since the 1960 edition. Over the years, revisions and updates have been made. Again, there is a need for updating. This edition reflects revised friction coefficients and detailed computer output. In all of the example problems, an effort has been made to include the "longhand" solution where appropriate, with the feeling that the designer must know "what's going on" before he can intelligently use the many computer programs available.

3.1.0 Introduction – Basic Theory and Principles

The basic principle of prestressed concrete can be described as follows: Stresses are introduced in the concrete opposite in sign to those resulting from loads acting on the structure, and in such a manner that allowable working stresses will not be exceeded. Compressive stresses, that are induced across the section under consideration, counter tensile stresses that develop due to loads. These compressive stresses result from an axial force and a bending moment transmitted to the concrete by the prestressing steel after the concrete has attained sufficient strength.

Prestressed concrete makes full use of the compressive strength of the concrete and the tensile strength of the prestressing steel. Ordinary reinforced concrete does not use the concrete to its full advantage. This is shown in the following comparison using the same allowable concrete stress (see Figure 3-1). In reinforced concrete, the resulting stresses are compressive on the top and tensile at the bottom. This leads to cracks developing in the tensile region and rendering the concrete stress zero while the steel takes all tension stresses. In prestressed concrete, large compressive stresses which are the result of the application of an eccentrically located prestress force, reduces the tension stress to near zero.

With beams of the same depth, a prestressed section can resist over twice the moment that the reinforced concrete section can resist. Furthermore, the allowable working stress can be doubled for the prestressed section, thus making the resisting moment over four times that of the reinforced concrete section. The prestressed section makes use of the entire concrete area; whereas, the reinforced section uses about ⅓ of the area and ⅔ is used to hold the reinforcing steel away from the working section, resist shearing stresses, and develop the bond between the concrete and reinforcing steel.

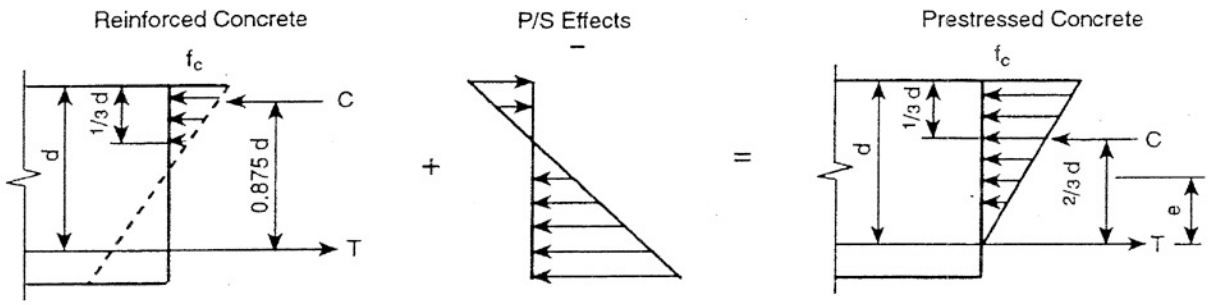

Figure 3 - 1

3.1.1 Definitions

Refer to Spec. Article 9.1.3 – Definitions for an extensive list of terms used in prestress technology. A few additional terms used in this text are defined below:

Cable Shear – Vertical component of a prestress force which is inclined to the horizontal. Used in shear calculations and generally reduces the effects of applied shear forces.

Continuous for Live Loads – Multi-span structure utilizing precast-prestress units with a cast-in-place deck. The top slab is reinforced across the bents thereby making the structure, "continuous for live loads." See Article 3.3.0, Design of an "I" Girder Continuous for Live Load.

Continuous Structure – Multi-span structure constructed continuous over several spans without expansion joints.

Hinge Curl – Unwanted deflection of the cantilever portion of a hinged span caused by application of the full prestress force to the member in its unloaded state.

Lightweight Concrete – Unit weight of concrete that is ≤ 125 lb per cu ft.

Normal weight Concrete – Unit weight of concrete that is ≥ 145 lb. per cu ft.

Partial Prestressing – Technology wherein the structure is designed with a combination of prestressing steel and mild steel reinforcing. See "A Design Procedure for Partial Prestressing of Concrete Box Girder Bridges" by Steven B. McBride dated January 30, 1987.

Prestress Frame – That portion of a continuous structure between expansion joints to be prestressed for it's total length.

Prestress Path – Trace of prestressing tendon throughout the length of the member.

Prestress Shortening – Elastic and inelastic shortening of a member due to the application of the prestressing force.

Primary Prestress Moment – Moment resulting from the eccentricity of the prestress tendon.

Resultant Moment – The resulting moment due to prestressing is the algebraic sum of the primary and secondary moments.

Secondary Moment – Moment resulting from induced reactions at the supports of a prestressed continuous member. The term "secondary" is somewhat misleading since the moments are not always secondary in magnitude and therefore play an important part in the stresses along the member.

Ultimate Moment Check – Comparison of a member's flexural strength to factored loads given in Table 3.22.1A of the Spec. Article 3.22.

Working Stress Design – Otherwise termed "Service Load Design"; the design of members by application of loads without load factors.

3.1.2 Advantages of Prestressed Concrete

1. Reduction of concrete and steel quantities.
2. Considerable reduction in depth of section, not only relative to reinforced concrete, but also relative to structural steel.
3. Crackless concrete within a known range of load. This results in greater durability under severe conditions of exposure.
4. Possesses maximum rigidity under working loads and maximum flexibility under excessive overloads.
5. Provides capacity to support a load in excess of the design load in which cracks appear but disappear completely on removal of the excess load.
6. Provides resistance to repeating and alternating loads even when exceeding the design load.
7. Produce definite reduction in diagonal tension which leads to fewer stirrups needed for shear.
8. During the prestressing operations, the steel is tested to a stress that will never again be reached under design loads. The same applies to the concrete, in many cases. Thus, it can be said that the materials in the structure are tested before being subjected to the working loads. This "in place" testing is impossible in ordinary reinforced concrete structures.
9. Makes it possible to control and/or reduce long term deflections.
10. Added flexibility for construction of continuous multi-span frame.

3.1.3 Disadvantages of Prestressed Concrete

1. The prestress structure is more sensitive to quality of workmanship and materials.
2. Creep and shrinkage of the concrete and relaxation of the prestressing steel are important considerations which need to be considered by the designer. This is especially so if lightweight concrete being used.

3.1.4 Prestressing Force

There are two methods of applying prestressing force."Pretensioning" indicates that tensioning of the steel is done before the concrete is cast in the forms. "Post-tensioning" means that the steel is tensioned after the concrete has been cast and attained the required strength. In the former, the force is transmitted by bond between the steel and concrete. The initial prestress is immediately reduced due to the deformation and shrinkage of the concrete. Gradually these losses are increased by further shrinkage and creep of the concrete. In "post-tensioning" there are no immediate losses but there is a gradual loss due the shrinkage and creep of the concrete and the relaxation of the steel. Consequently, for equivalent members the "pretensioning" method requires a greater initial prestressing force to compensate for the larger losses.

"Pretensioning" is practical only with factory or mass production facilities, since permanent external anchorages are required to take the reaction of the stressed strands until the concrete attains the required strength.

Several methods of stressing and anchoring "post-tensioned" steel are in use. The methods used most commonly in the United States at the present time are illustrated in publications issued by the industry. The Office of Structure Construction publishes its *"California Prestress Manual"* which also contains illustrations of current hardware.

3.1.5 Formulas for Design

Since the theory of prestressed concrete design amounts to superimposing stresses caused by various stages and conditions of loading, a general equation can be written as follows:

$$F = \frac{P}{A} \pm \frac{Pey}{I} \pm f \text{ (General Prestressing Equation)}$$

F = resulting stress in the concrete.

y = distance from the centroidal axis at a desired stage and condition of loading.

P = the prestressing force acting at this stage.

A = area of concrete or equivalent area of concrete used in a particular method of design.

e = distance from the center of gravity of the section to the centroid of the cable path.

I = section moment of inertia.

f = the stress y distance from the centroidal axis caused by stage and condition of loading on the member. This stress is computed as if the member were a homogeneous material.

That is, $f = \frac{My}{I}$ (i.e., -DL + LL + I Stresses)

For example, consider Figure 3-2. The girder of span length "L" has just been prestressed. At this stage the only external load acting is the dead load of the girder (the effect of prestressing is to lift the girder from its soffit). Therefore, the stresses in the top and bottom fiber at this time are:

$$F_{ti} = P_i\left(\frac{1}{A} - \frac{ey_t}{I}\right) + f_{dt} \qquad \text{(Eq. 1)}$$

f_{dt}, f_{db} = Girder DL stress top and bottom

$$F_{bi} = P_i\left(\frac{1}{A} + \frac{ey_b}{I}\right) - f_{db} \qquad \text{(Eq. 2)}$$

F_{ti} = resulting stress in top fiber – initial

F_{bi} = resulting stress in bottom fiber – initial

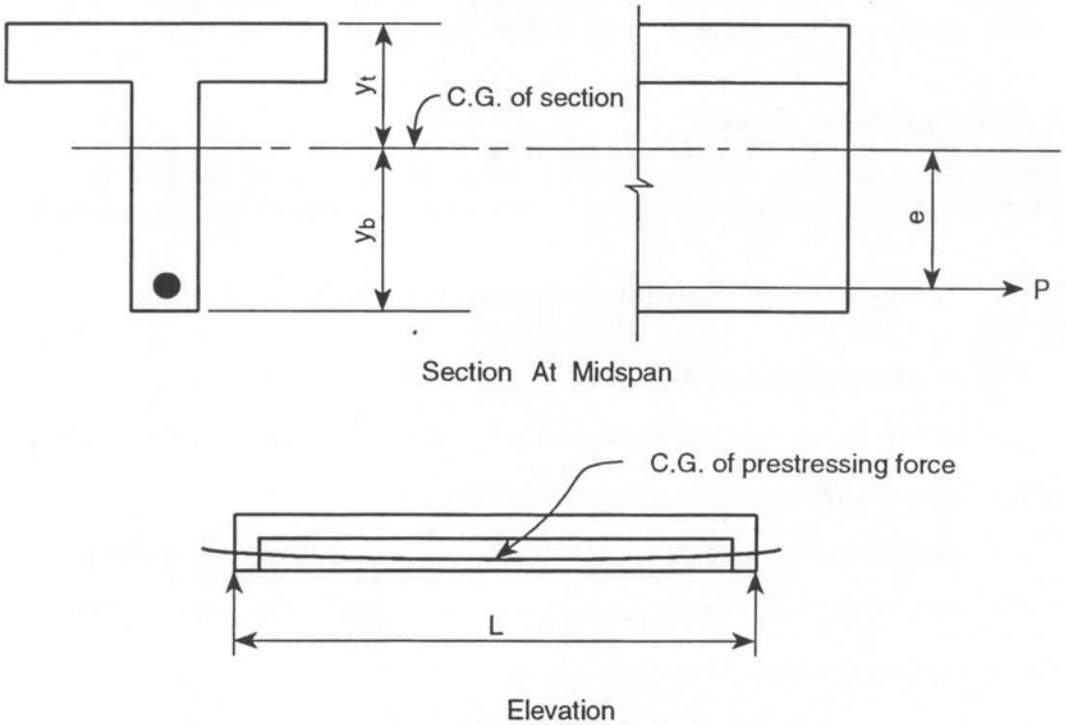

Figure 3-2

Assume next that, in time, the girder has lost part of its prestressing force. This loss is due to the reduction of stress in the prestressing steel caused by the shrinkage and creep of the concrete, and the creep of the steel. The P_i in Equations 1 and 2 in time become P_f. Now any load superimposed upon the girder changes the stress distribution in the section. Also, the force P_f is increased due to the fact that the girder deflects under the superimposed or live load. The increase in P_f is neglected in the discussion at this time since, in the design example, the effect of the increase in steel stress will be considered. The stresses in the top and bottom fiber at the stage of loading consisting of the dead load of the girder and the superimposed or live load are as follows:

$$F_{tf} = P_f\left(\frac{1}{A} - \frac{ey_t}{I}\right) + f_{dt} + f_{at} \qquad \text{(Eq. 3)}$$

$$F_{bf} = P_f\left(\frac{1}{A} + \frac{ey_b}{I}\right) - f_{db} - f_{ab} \qquad \text{(Eq. 4)}$$

where f_{at}, f_{ab} = stresses due to added DL and LL + I, top and bottom.

Note: In equations 1 through 4, use only the numerical values f_{dt}, f_{at}, f_{db}, and f_{ab}. The equations will give the correct sign. A plus sign indicates compression and a minus sign indicates tension.

3.1.6 Allowable Stresses (Spec. Article 9.15)

A. Prestressing Steel

Stress at anchorage after seating:

Pretensioned members: for stress-relieved strand:	$0.70\ f'_s$
for low relaxation strand:	$0.75\ f'_s$
Post tensioned members:	$0.70\ f'_s$
Stress at service load after losses:	$0.80\ f^*_y$

where: for stress-relieved strand: $f^*_y = 0.85\ f'_s$

for low-relaxation strand: $f^*_y = 0.90\ f'_s$

(Jacking stress is $0.75\ f'_s$ max at any time)

B. Concrete

1. Temporary stresses before losses due to creep and shrinkage:

Compression

Pretensioned members:	$0.60\ f'_{ci}$
Post-tensioned members:	$0.55\ f'_{ci}$

Tension

Segmental elements without auxiliary

nonprestressed reinforcement in the tension zone: zero

Other areas

In tension areas with no bonded reinforcement: 200 psi or $3\sqrt{f'_{ci}}$

Where the calculated tensile stress exceeds this value, bonded reinforcement shall be provided to resist the total tension force in the concrete computed on the assumption of an uncracked section. The maximum tensile stress shall not exceed: $7.5\sqrt{f'_{ci}}$

2. Stress at service load after losses have occurred:

Compression: $0.40\ f'_c$

Tension in the precompressed tensile zone

(1a) For members with bonded reinforcement: $6\sqrt{f'_c}$

(2a) For Environmental Area III and marine environment: $3\sqrt{f'_c}$

(b) Dead load tension: zero

(c) For members without bonded reinforcement: zero

To determine the working stress in prestress, the following losses must be considered: (1) anchorage slip, (2) friction losses due to curvature ($\mu\phi$) and wobble (KL), (3) elastic shortening of concrete (ES), (4) creep of concrete (CR_c), (5) shrinkage of concrete (SH), (6) relaxation of prestressing steel (CR_s). The table below gives total losses for all causes except (1) and (2):

C. Assumed Losses (Spec., Article 9.16.2.2)(Table 9.16.2.2)

Pretensioning strand: low relaxation: 35,000 psi

normal relaxation: 45,000 psi

Post-tensioning (friction losses not included)

Wire or strand: low relaxation: 20,000 psi

normal relaxation: 32,000 psi

Bars: 22,000 psi

3.1.7 Design Theory

Prestressed concrete members shall be designed as follows:

The prestressing force shall be determined by Allowable Stress Design using elastic theory for loads at the service level considering HS Loads.

The ultimate moment capacity shall be checked by Load Factor Design using ultimate strength theory for loads at the factored level considering HS Load or P Load, whichever is greater.

Shear design shall be based on strength (Load Factor Design) using ultimate strength theory with factored HS Load or P Load, whichever is greater.

3.1.8 Design Parameters

A. Minimum Depth to Span Ratios (BDA 10-26 thru 10-28)

For Cast-in-Place Prestressed Box Girder

Simple Span	D/S = 0.045
Multi-Span Continuous	D/S = 0.040
Haunched Structure	
At the bents	D/S = 0.048
At midspan and abutments	D/S = 0.028

For Precast Prestressed I Girder

Simple Span	D/S = 0.055
Multi-Span Continuous	D/S = 0.050

B. Minimum f'_c and f'_{ci}

For post-tensioned members (MTD 11-3)

Use $f'_c = 4000$ psi, $f'_{ci} = 3500$ psi

For pre-tensioned members (Spec. Article 9.15)
Use $f'_c = 4000$ psi, $f'_{ci} = 4000$ psi

C. Frame Length

Frames with continuous tendons may be economical up to 750 ft. or more in length.

D. Single End Stressing

Designer should consider single-end stressing for frames of two, three, or four spans or where the increase of prestressing force is less than 3 percent.

3.1.9. Assumptions

The following assumptions are made:

1. Strain varies linearly over the depth of the member throughout the entire load range.
2. Before cracking, stress is linearly proportional to strain.
3. After cracking, tension in the concrete is neglected.

3.1.10 Design

Bridges shall be investigated for stresses and deformations at each loading stage that may be critical during construction, handling, transportation, erection and the service life.

3.1.11 Load Factors

Load Factors g and b are multiples of the design load thus allowing for variation in loading of the structure and assuring its safety. The Required Strength U is then obtained:

$$Mu, V_u, LOAD_u, STRESS_u = \gamma\,[(b_D)DL + \beta_L(LL + I)] + (\beta_{PS})PS$$

where: γ = load factor (Spec., Tables 3.22.1A and 3.22.1B)

β = coefficient (Spec., Table 3.22.1A)

Service Load Design: $\gamma = 1.00, \beta_D = 1.0, \beta_{(L+I)'H} = 1.00$

Load Factor Design: $\gamma = 1.30, \beta_D = 1.0, \beta_{(L+I)'H} = 1.67, \beta_{(L+I)'P} = 1.0$

3.1.12 Strength Reduction Factors

Reduction factors (ϕ) are related to material and are called Strength Capacity Reduction Factors in Spec. Article 9.14, or Strength Reduction Factors in Spec. Article 8.16.1.2. Reduction factors assures that a conservative estimate of the actual strength is used. Calculated capacity of the member is usually called Nominal Strength S_n.

The product of Nominal Strength (S_n) and of the Strength Capacity Reduction Factor (ϕ) is called Design Strength (S_D)of the member and in general terms may be expressed by the following equation:

$$U \leq S_D = \phi S_n$$

In terms of moment, shear, or load we obtain:

$$M_u \leq \phi M_n$$

$$V_u \leq \phi V_n$$

$$P_u \leq \phi P_n$$

where: ϕ = strength reduction factor (Spec., Article 8.16.1.2 and Article 9.14)

= 1.00 for precast prestressed

= 0.95 for cast-in-place post-tensioned

= 0.90 for shear, torsion

S_n = general term for nominal strength

M_n = nominal moment

V_n = nominal shear force

P_n = nominal axial force etc.

3.2.0 Design of a Simple Span Prestressed Precast "I" Girder Bridge

In designing prestressed structures there are various factors which influence the type of member, concrete stresses, and prestressing force to be used. In some cases where the minimum depth is the important factor, the limiting concrete stresses could very well determine the design. However, where the depth is not critical, the determining factors may be the quantity of concrete compared to the quantity of prestressing steel. It is quite apparent that a shallow depth, while requiring less concrete, will require more prestressing steel than a deeper section. In other words, for any site there are various combinations to be checked in order to obtain the most economical structure.

It is not the purpose in this section to discuss the economics of the various types or designs. In the design to follow, it is assumed that the structure selected is the one best suited by site requirements, economics, and other factors.

On the following pages, calculations for the Standard "I" Girder are used to demonstrate the design of a precast prestressed girder with a composite slab. The calculations for any precast prestressed girder would be similar. The Standard "I" Section has been found to be best suited for a minimum depth to span ratio of 0.055 for simple spans and 0.050 for continuous structures, and with girder spacing from 7 ft. to 8 ft.

The gross section properties are used first in the calculations, followed by solutions using net/transformed sections. Most of our prestressed concrete designs allow the use of pretensioning or the various systems of post-tensioning. However, pretensioning is the choice most contractors will elect unless other constraints exist such as girders too long to be transported or too large a prestressing force for the casting bed.

The net/transformed section will vary depending on the number, size, and location of tendon holes for post-tensioned units; and the area and location of prestressing steel for pretensioned units.

These variations complicate the net/transformed design of a girder.

It should be noted that computer programs for prestressed concrete girders make it practical to design using net/transformed section properties.

At this time, both post-tension and pretension steels are most commonly supplied with nominal ultimate strength value of 270 ksi. This value of f'_s is used in subsequent examples.

3.2.0.1 Design Example

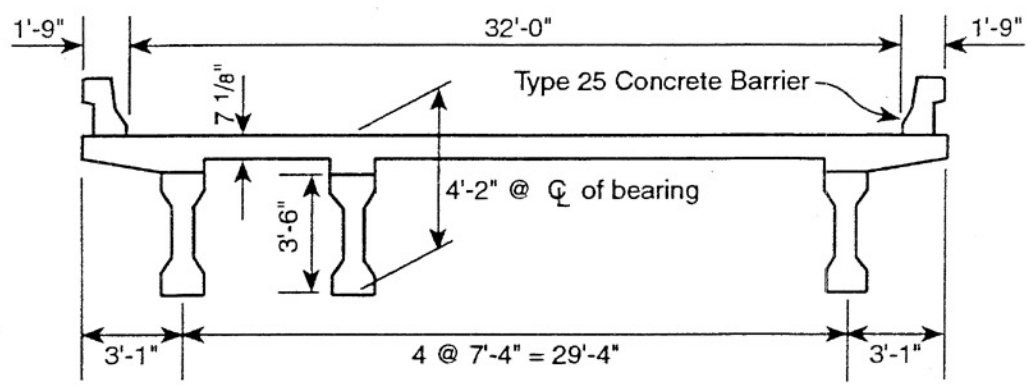

Typical Section

Design Span = 68'

Depth / Span = $\frac{4.17'}{68'}$ = 0.061 > 0.055 OK

Figure 3-3

Note: We will design a typical interior girder. For section properties of standard I girders see BDA 6-1.

Deck Slab

Design Span = (7'-4") – (1'-7") = 5'-9" (BDD 8-30)

Top Slab Thickness, t = 7⅛in

Loads and midspan moments – Interior

Weight of concrete = 150 lb/ft3

Area of Type 25 concrete barrier = 2.61 ft^2

Weight of Asphalt Concrete (AC) surfacing = 35 lb/ft^2

DL Girder = $\frac{150 \times 474}{144}$	= 494 lb/ft	Use 0.50 kips/ft
DL Slab= $[(0.594 \times 7.33) + (0.08 \times 1.58)] \times 150$	= 672 lb/ft	Use 0.67 kips/ft
DL Railing = $2.61 \times 150 \times \frac{2}{5}$	= 157 lb/ft	Use 0.16 kips/ft
DL AC Surf = $35 \times \frac{32}{5}$	= 224 lb/ft	Use 0.22 kips/ft
Total DL	=	1.55 kips/ft

For simple span, $M_{max} = \frac{wL^2}{8}$ For live load moments in simple spans see BDA 9–1 and 9–81.2.

M_{DL} (girder) $= \frac{0.50 \times 68^2}{8} = 289$ kip ft $= 3.47 \times 10^6$ in lbs

M_{DL} (slab) $= \frac{0.67 \times 68^2}{8} = 387$ kip ft $= 4.65 \times 10^6$ in lbs

M_{DL} (railing) $= \frac{0.16 \times 68^2}{8} = 092$ kip ft $= 1.11 \times 10^6$ in lbs

M_{AC} $= \frac{0.22 \times 68^2}{8} = 289$ kip ft $= 1.53 \times 10^6$ in lbs

$(M_{LL+I})_{HS}$ = Maximum Moment HS Loading, one lane × Impact* × Number of Lanes per girder**

$= 950 \times 1.259 \times 0.666 = 797$ kip ft $= 9.56 \times 10^6$ in lbs

$(M_{LL+I})_P$ $= 1560 \times 1.259 \times 0.666 = 1309$ kip ft $= 15.78 \times 10^6$ in lbs

The sequence of imposition of stresses on the girder is as follows:

a. Tendons are stressed within the form for full dead and live loads, the girder is poured and after the concrete sets the cables are cut, transferring stresses to the girder (Figure 3-4a).

b. The girders are erected on the structure supports and the top slab is poured. Additional stresses are introduced into the girder due to the slab weight. Prior to the setting of concrete, the slab does not contribute to the section modulus (Figure 3-4b).

c. After the slab sets, it acts with the girder as a composite member and helps to resist stresses by adding to the section moment of inertia stresses are due to full dead loads and live loads (Figure 3-4c).

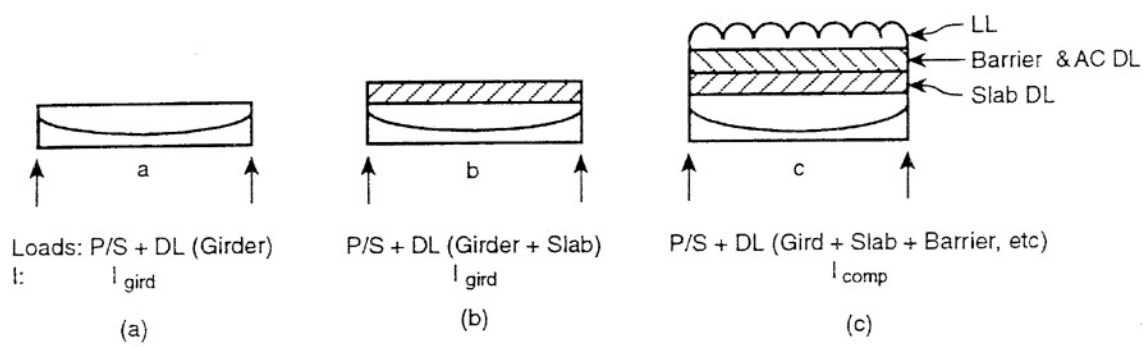

Figure 3-4

---

*Impact, $I = \frac{50}{L+125} = \frac{50}{68+125} = 0.259\%$ (Spec. Article 3.8.2.1)

**Number of Lanes per girder $= \frac{\text{Girder Spacing}}{5.5} \times \text{Wheel Lines} \times \frac{1 \text{ Lane}}{2 \text{ Wheel Lines}} = \frac{7.333}{11} = 0.666$

(Spec. Table 3.23.1)

3.2.1 Design – Cross Section, Pretension

Properties of Girder only – Gross Section

$I = 95{,}000 \text{ in}^4$
$A = 474 \text{ in}^2$
$y_t = 22.0 \text{ in}$
$y_b = 20.0 \text{ in}$

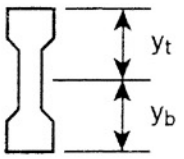

Important Equations

$I_{bottom} = I_{oo} + \Sigma Ay^2$
$I_{cg} = I_{bottom} - \Sigma Ay_b^2$

Stresses at this stage and after the pouring of the slab, at the top and bottom of girder are computed from and $f = \frac{My}{I}$ are as follows:

	Top Fiber (psi)		Bottom Fiber (psi)	
DL Girder	$\frac{3.47 \times 10^6 \times 22}{95{,}000}$	= 804	$\frac{3.47 \times 10^6 \times 20}{95{,}000}$	= 731
DL Slab	$\frac{4.65 \times 10^6 \times 22}{95{,}000}$	= 1077	$\frac{4.65 \times 10^6 \times 20}{95{,}000}$	= 979
Total DL		= 1881 psi (Compression)		= 1710 psi (Tension)

(Note: Carry these stresses forward to the summation of DL + LL stresses.)

Properties of CompositeSection (Girder & Slab)

Assume fillet thickness = ⅞ .

Effective Flange Width: (Spec. Article 8.10.1.1)

$6 \times t_f = 6 \times 0.594 = 3.564$ ft

½ S = ½ (5.75) = 2.875ft < 3.564ft use 2.875ft

Total width $= 2 \times 2.875 + 1.58 = 7.33\text{ft} < {}^1/_4\, L = \frac{68}{4} = 17.0\text{ft}$

Therefore, 7.33 ft controls – use this as the effective flange width. Assume the dimension of the bottom of the girder to the C.G. of the prestressing steel (cgs) to be 3½ in. at midspan.

Then,

$e = 20.0 - 3.5 = 16.5$ in

$$I_{oo}\,\text{Slab} = \frac{bd}{12} = \frac{7.33 \times 12 \times 7.125^3}{12} = 2653 \text{ in}^4$$

Properties of Composite Section

	A	$\bar{y}$	$A\bar{y}$	$A\bar{y}^2$	I_{oo}
Girder	474	20.00	9,480	189,600	95,000
Slab (88 in. × 7 1/8 in.)	627	46.44	29,118	1,352,234	2,653
Σ =	1,101 in.^{2}		38,598 in.^{3}	1,541,834 in.^{4}	97,653 in.^{4}

I about the bottom of girder = 1,541,834 + 97,653 = 1,639,487 in.^{4}

$$\frac{\Sigma A\bar{y}}{\Sigma A} = y_b = \frac{38{,}598}{1{,}101} = 35.06 \text{ in}$$

$$(\Sigma A)y_b^{\,2} = 1{,}353{,}353 \text{ in}^4$$

so:

$$I_{cgc} = 1{,}639{,}487 - 1{,}353{,}353 = 286{,}134 \text{ in.}^4$$

For investigation of fiber stresses at the top of the girder:

$$Y_t = 42.0 - 35.06 = 6.94 \text{ in.}$$

and, similarly, at the bottom of the girder:

$$Y_b = 35.06 \text{ in.}$$

	Top of Girder (psi)		Bottom of Girder (psi)	
DL AC Surface	$\frac{1.53\times10^6\times6.94}{286{,}134}$	= 37	$\frac{1.53\times10^6\times35.06}{286{,}134}$	= 187
DL Railing	$\frac{1.11\times10^6\times6.94}{286{,}134}$	= 27	$\frac{1.11\times10^6\times35.06}{286{,}134}$	= 136
Previously calculated DL		= 1881 *		= 1710 *
Full DL		= 1945		= 2033
$(LL+I)_H$	$\frac{9.56\times10^6\times6.94}{286{,}134}$	= 232	$\frac{9.56\times10^6\times35.06}{286{,}134}$	= 1171
Total DL + LL		= 2177 psi (Compression)		= 3204 psi (Tension)

*Previously calculated stresses, see page 3-17

Determine Prestressing Force, P.

Design stress, DL only = 2033 psi (no tension allowed under DL's

Design stress, DL + LL = 3204 - allow ten = 3204 - $6\sqrt{f'_c}$

= 3204 - $6\sqrt{4000}$ = 2825 > 2033 psi

Design for the larger of the two stresses.

Therefore: f_{des} = 2825 psi

This stress is countered by that induced on the girder by prestressing. At first, the girder will resist the prestress without the contribution of the top slab to the section modulus and:

$$f_{des} = \frac{P}{A} + \frac{Pey_b}{I_{girder}} \text{ solving for } P = \frac{f_{des}}{\left(\frac{1}{A} + \frac{ey_b}{I_{girder}}\right)}$$

$$\therefore P = \frac{2825}{\left(\frac{1}{474} + \frac{16.5 \times 20}{95000}\right)}$$

P = 505,965 lbs., use P = 510 kips. (MTD 11-8)

It should be noted that in most pretension girder designs, the total stress (Σ DL + LL) controls the final force. However, it can be predicted that in certain structures, such as a pedestrian overcrossing, where live loads are small, dead load stress will be higher than the total stress less allowable tension and therefore control the pretensioning force.

We will complete the design for the pre-tensioned girder only, noting that the procedure for a post-tensioned beam is similar and that only the losses in the prestressing steel are handled differently.

Effective Stress = 0.75 f'_s - Assumed Losses (using low lax strands)

Effective Stress = $270 \times 0.75 - 35 = 167.5$ ksi

From above: $P = P_f = 510$ kips

$$A^*_s = \frac{510}{167.5} = 3.04 \text{ in.}^2$$

At the time the girder is stressed a portion of the total loss of 35 ksi will have occurred. We assume that this amount is 13 ksi. The remainder, 22 ksi, will be lost after initial prestressing force, p_i, has been applied.

Therefore, for the purpose of computing f'_c:

$P_i = P_f + A^*_s$ (losses after transfer) = $510 + 3.04 \times 22 = 577$ kips

See Equations 1, 2, 3 & 4	Fiber Stresses at Midspan **Top of Girder (psi)**
@ Stressing (Girder DL only)	$577\times\left(\frac{1}{474}-\frac{16.5\times22}{95{,}000}\right)\times1000+804=-183$ psi (Tension)
Design Load (DL + LL + I)	$510\times\left(\frac{1}{474}-\frac{16.5\times22}{95{,}000}\right)\times1000+2177=1304$ psi (Compression)
See Equations 1, 2, 3 & 4	**Bottom of Girder (psi)**
@ Stressing (Girder DL only)	$577\times\left(\frac{1}{474}-\frac{16.5\times20}{95{,}000}\right)\times1000-731=2491$ psi (Compression)
Design Load (DL + LL + I)	$510\times\left(\frac{1}{474}-\frac{16.5\times20}{95{,}000}\right)\times1000-3204=-356$ psi (Tension)

Table 3-1

Concrete Strength Determination (f'_c) (Spec. Article 9.15.2.1)

Temporary Stress Conditions:

Compression; $f'_{ci} = \frac{2491}{0.60} = 4151$ psi, use 4200 psi minimum.

Tension; allowable stress = $3\sqrt{f'_c}$ or 200 psi maximum.

$3\sqrt{4200} = 194$ psi.

183 psi < 194 psi — OK.

Design Load Stress Conditions:

Compression; $f'_c = \frac{1304}{0.40} = 3260$ psi < 4200 psi, therefore use

$f'_c = f'_{ci} = 4200$ psi minimum.

Allowable Tension; $6\sqrt{f'_c} = 6\sqrt{4200} = 389 > 356$ — OK.

3.2.2 Design – Net/Transformed Section, Pretension (Holes for Prestressing Steel)

It is logical to assume that P_f could be less in a net/transformed section design than in the preceding example. Using the gross section design as a guideline, estimate that P_f will be approximately 480 k. Since this is a pretensioned member, the controlling value for working stress in the steel is $0.75 \times 270 - 35 = 167.5$ ksi and for the purpose of design, $A^*_s = 480/167.5 = 2.87$ in.^{2}. Use an average value of $n = 7$, and again at midspan assume that cgs = 3½ in. above the bottom of the girder.

Properties of the Girder Only – Net Transformed Section

	A	$\bar{y}$	$A\bar{y}$	$A\bar{y}^2$	I_{oo}
Girder	474	20.00	9,480.0	189,600	95,000
Equiv. Conc. Area					
$A_s(n - 1) = 2.87 \times 6$	17	3.50	59.5	208	—
$\Sigma =$	491 in.^{2}		9,539.5 in.^{3}	189,808 in.^{4}	95,000 in.^{4}

I about the bottom of girder = 189,808 + 95,000 = 284,808 in.^{4}

$$\bar{y} = y_b = \frac{9539.5}{491} = 19.43 \text{ in.}$$

$$(\Sigma A)y_b^2 = 491 \times 19.43^2 = 185{,}365 \text{ in.}^4$$

and

$$I_{cg} = 284{,}808 - 185{,}365 \text{ in.}^4 = 99{,}443 \text{ in.}^4 \left[I_{bottom} - (\Sigma A)_{y_b}{}^2\right]$$

$$y_t = 42.0 - 19.43 = 22.57 \text{ in.}$$

$$e = 19.43 - 3.5 = 15.93 \text{ in.}$$

Stresses Net Transformed Section

	Top Fiber (psi)	Bottom Fiber (psi)
DL Girder	$\frac{3.47 \times 10^6 \times 22.57}{99{,}443} = 788$	$\frac{3.47 \times 10^6 \times 19.43}{99{,}443} = 678$
DL Slab	$\frac{4.65 \times 10^6 \times 22.57}{99{,}443} = 1055$	$\frac{4.65 \times 10^6 \times 19.43}{99{,}443} = 909$
Total DL	= 1843 psi (Compression)	= 1587 psi (Tension)

Properties of Composite Section

	A	$\bar{y}$	$A\bar{y}$	$A\bar{y}^2$	I_{oo}
Girder (Net/Trans.)	491	19.43	9,540	185,365	99,443
Slab (88 in. × 7⅛ in.)	627	46.44	29,118	1,352,234	2,653
S =	1,118 in.^{2}		38,658 in.^{3}	1,537,599 in.^{4}	95,000 in.^{4}

I about the bottom of girder = 1,537,599 + 102,096 = 1,639,695 in.^{4}

$$\bar{y} = y_b = \frac{38,658}{1,118} = 34.58 \text{ in.}$$

$(\Sigma A)y_b^2 = 1,118 \times 34.58^2 = 1,336,878$ in.^{4}

and

$I_{cgc'} = 1,639,695 - 1,336,878 = 302,817$ in.^{4}

For investigation of fiber stresses at the top of the girder:

$y_t = 42.0 - 34.58 = 7.42$ in.

Stresses – Composite Section

	Top of Girder (psi)	Bottom of Girder (psi)
DL AC Surface	$\frac{1.53\times10^6\times7.42}{302,817}$ = 37	$\frac{1.53\times10^6\times34.58}{302,817}$ = 175
DL Railing	$\frac{1.11\times10^6\times7.42}{302,817}$ = 27	$\frac{1.11\times10^6\times34.58}{302,817}$ = 127
Previously calculated DL	= 1843 *	= 1587 *
Full DL	= 1907	= 1889
$(LL+I)_H$	$\frac{9.56\times10^6\times7.42}{302,817}$ = 234	$\frac{9.56\times10^6\times34.58}{302,817}$ = 1092
Total DL+LL	= 2141 psi (Compression)	= 2981 psi (Tension)

*Stress carried over from girder only calculation.

Allowable tension at design load after losses = $6\sqrt{f'_c}$

Assume $f'_c = 4000$ psi

$= 6\sqrt{4000} = 379$ psi

Then, try 379 psi tension and using the net/transformed girder area:

$f_{des} = 2981 - 379 = 2602$ psi > 1889 psi (DL + added DL only)

Therefore, use $fd_{es} = 2602$ psi.

$$P_f = \frac{2602}{\left(\frac{1}{491} + \frac{15.93 \times 19.43}{99,468}\right)} = 505{,}146 \text{ lbs. Use 510 kips.}$$

Since this is about the same P_f as the previous solution, we will not redesign again as the answer will not change significantly.

$f_s = 0.75\, f'_s - 35 = 167.5$ ksi

$$A^*_s = \frac{P_f}{f_s}$$

$$A^*_s = \frac{510}{167.5} = 3.04 \text{ in.}^2$$

and for the purpose of computing f'_{ci};

$P_i = P_f + A_s \times \text{Losses} = 510 + 3.04 \times 22 = 577$ kips

For $e = 19.43 - 3.5 = 15.93$ in.

See Equations 1, 2, 3 & 4	Fiber Stresses at Midspan **Top of Girder (psi)**
@ Stressing (Girder DL only)	$577\times\left(\frac{1}{491}-\frac{15.93\times22.57}{99{,}443}\right)\times1000+788=-123$ psi (Tension)
Design Load (DL + LL + I)	$510\times\left(\frac{1}{491}-\frac{15.93\times22.57}{99{,}443}\right)\times1000+2141=1336$ psi (Compression)
See Equations 1, 2, 3 & 4	**Bottom of Girder (psi)**
@ Stressing (Girder DL only)	$577\times\left(\frac{1}{491}-\frac{15.93\times19.43}{99{,}443}\right)\times1000-678=2293$ psi (Compression)
Design Load (DL + LL + I)	$510\times\left(\frac{1}{491}-\frac{15.93\times19.43}{99{,}443}\right)\times1000-2981=-354$ psi (Tension)

Table 3-2

$$f'_{ci}=\frac{2293}{0.60}=3822\text{ psi}$$

$$f'_{c}=\frac{1336}{0.40}=3340\text{ psi}$$

Use $f'_c = 4000$ psi

Current practice allows that pretensioned beams may be constructed with as few as two hold-down positions. The harping of these tendons near the girder ends help to control deflections and tensile stresses in the upper flange. The path of the prestressing steel might then be:

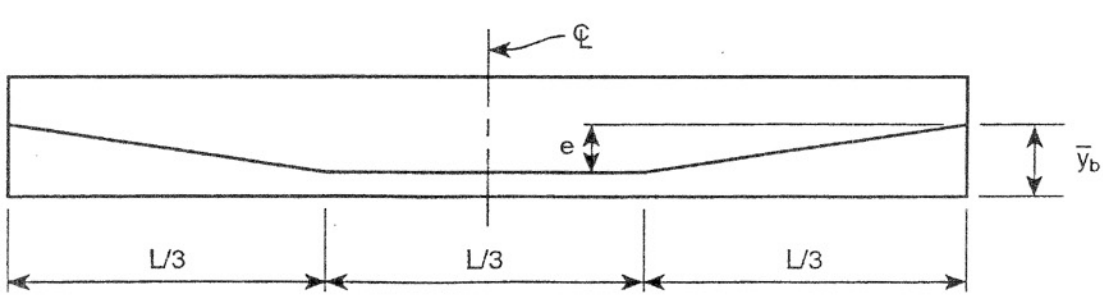

By inspection we can see that at the L/3 points, the stresses (from the prestress effect alone) are unchanged from their values at midspan. The stresses in the composite section, however, are reduced in the ratio of reduced moment.

For the uniformly distributed dead loads, moments at ; $\frac{L}{3} = \frac{W \times (L/3) \times (L - L/3)}{2}$ or $\frac{wL^2}{9}$

and the ratio of L/3 point stresses to midspan stresses is $\frac{wL^2}{9} \div \frac{wL^2}{8}$ or 0.89.

For a 68ft span it can be shown (influence lines) that LL + I moments @ L/3 equal approximately 0.91 of the midspan values. For span lengths in general, it is sufficiently accurate to use the ratio 0.89 for all L/3 point stresses.

Then:

See Equations 1, 2, 3, & 4	Fiber Stresses at L/3 Points **Top of Girder (psi)**
@ Stressing (Girder DL only)	$577 \times \left(\frac{1}{491} - \frac{15.93 \times 22.57}{99{,}443}\right) \times 1000 + (788 \times 0.89) = -210$ psi (Tension)
Design Load (DL+LL+I)	$510 \times \left(\frac{1}{491} - \frac{15.93 \times 22.57}{99{,}443}\right) \times 1000 + (2141 \times 0.89) = 1101$ psi (Compression)
See Equations 1, 2, 3, & 4	**Bottom of Girder (psi)**
@ Stressing (Girder DL only)	$577 \times \left(\frac{1}{491} - \frac{15.93 \times 22.57}{99{,}443}\right) \times 1000 + (678 \times 0.89) = -2368$ psi (Compression)
Design Load (DL+LL+I)	$510 \times \left(\frac{1}{491} + \frac{15.93 \times 22.57}{99{,}443}\right) \times 1000 - (2981 \times 0.89) = -26$ psi (Tension)

Table 3-3

Concrete Strength Requirements

Temporary stress conditions:

Compression; $f'_{ci} = \frac{2368}{0.60} = 3947$ psi > f'_c at midspan, however less than 4000 psi.

Tension; allowable stress = $3\sqrt{f'_c}$ or $3\sqrt{4000}$ = 190 psi or 200 psi maximum.

Maximum temporary tensile stress = 210 > 190. It may be assumed 2-#4 mild reinforcement will resist 20 psi tension (see below).

Compression; $f'_c = \dfrac{1101}{0.40} = 2753$ psi @ L/3 point < f'_c (3340 psi) at midspan.

Use $f'_c = f'_{ci} = 4000$ psi.

The fiber stresses at the L/3 points were -210 psi and +2368 psi at the top and bottom of the girder, respectively. With these stresses, f'_{ci} would appear to be governed by the temporary tensile stress in the top fibers of the girder, with a required value of 4900 psi ($f'_{ci} = (210/3)^2 = 4900$ psi). (1) Specifications, however, allow that auxiliary nonprestressed reinforcement may be provided to resist the total tension force (computed on the assumption of an uncracked section) provided the tensile stress does not exceed $7.5\sqrt{f'_c}$.

If the other controlling stresses permitted the use of 4000 psi concrete, it is more sensible to provide this reinforcement than to raise the value of concrete strength above 4000 psi.

Mild Reinforcement:

Locate neutral axis, x (see Figure 3-5).

$$x = \frac{42 \times 210}{2368 + 210} = 3.42 \text{ in}$$

Condition of Stress:

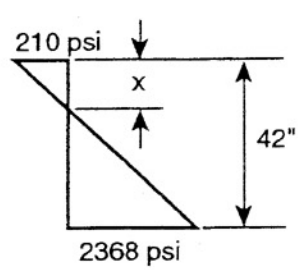

Figure 3-5

(1) $\sigma = 3\sqrt{f'_{ci}}$

$$\therefore f'_{ci} = \left(\frac{\sigma}{3}\right)^2$$

The upper portion of the girder cross section is:

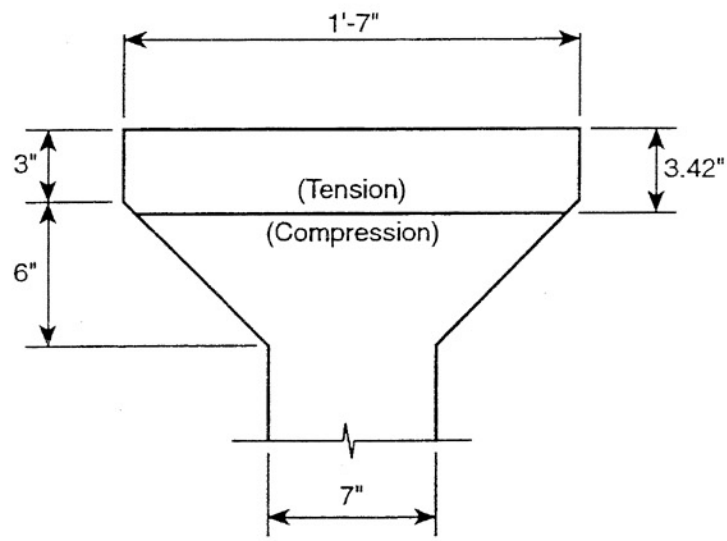

We could be slightly more accurate, but it is conservative and sufficiently correct to say that the total tension force $F_t = (½ \times 210) \times 3.42 \times 19 = 6823$ lbs. Using nonprestressed reinforcement (mild steel) at a working stress of 24 ksi, the required steel area = 6823/24,000 = 0.28 sq. in. which we would supply by using two (2) full length #4 bars. ($A_s = 2 \times 0.20 = 0.40$ in^2). With the addition of this reinforcement, the design to this point will be adequate using f'_c and f'_{ci} = 4000 psi.

3.2.3 Design – Net/Transformed Section, Post-Tension

The design of the girder for these conditions would follow the pattern of the preceding example and will not be repeated here.

Listed below are some differences in the design approach which should be considered:

1. Girder properties would be cross section properties less the effects of the assumed number, size, and location of the tendon holes.

2. It is necessary to investigate fiber stresses only at midspan since the tendon will drape in an approximately parabolic shape from anchorage to anchorage.

3. Post tension losses due to cable relaxation are different and there are additional losses due to anchorage slippage.

3.2.4 Ultimate Moment

The girder design of Section 3.2.2 will be used in a typical example of the required check for ultimate flexural capacity of the girder. Refer to Spec. Articles 9.17 and 9.18.

$A^*_s = 3.04 \text{ in}^2$

$b = 7'\text{-}4''$

$d = 50'' - 3.50'' = 46.50 \text{ in. or } 3.88 \text{ ft}$

$f'_c = 3250 \text{ psi} = 3.25 \text{ ksi (deck concrete)}$

$f'_s = 270 \text{ ksi}$

then

$$p^* = \frac{A^*_s}{bd} = \frac{3.04}{7.33 \times 3.88 \times 144}$$

$$= 7.44 \times 10^{-4}$$

$$f^*_{su} = f'_s\left(1 - \frac{0.5 \times p^* \times f'_s}{f'_c}\right) \qquad \text{(Spec. Article 9.17.4.1)}$$

$$= 270 \times 0.9691$$

$$= 262 \text{ ksi}$$

The neutral axis (at ultimate load) is assumed to be in the web if the flange thickness is less than

$$\frac{1.4\, d\, p^*\, f^*_{su}}{f'_c} = \frac{1.4 \times 3.88 \times (7.44 \times 10^{-4}) \times 262 \times 12}{3.25} \qquad \text{(Spec. Article 9.17.3)}$$

$= 3.90'' < t = 7\frac{1}{8}''$ and the N.A. at ultimate load is in the flange, therefore the design is treated as a rectangular section.

Since

$$\frac{p^*\, f^*_{su}}{f'_c} = \frac{(7.44 \times 10^{-4}) \times 262}{3.25} = 0.060 < 0.30 \qquad \text{(Spec. Article 9.18.1)}$$

failure of the steel rather than of the concrete will occur at ultimate load and the ultimate flexural strength of the section is taken to be

$$M_{ur} = \phi\, A^*_s\, f^*_{su}\, d\left(1 - \frac{0.6 p^* f^*_{su}}{f'_c}\right) \qquad \text{(Spec. Article 9.17.2)}$$

where $\phi = 1.00$ for precast members (see page 3-13)

so,

$$M_{ur} = 1.00 \times 3.04 \times 262 \times 3.88 \left[1 - \frac{0.6 \times (7.44 \times 10^{-4}) \times 262}{3.25}\right]$$

$$= 1.00 \times 3.04 \times 262 \times 3.88 \times 0.9641$$

$$= 2980 \text{ kip ft}$$

Load factor moments applied (Spec. Article 3.22)

$$M_{ua}(H) = 1.3\left[M_{DL} + \frac{5}{3}(M_{LL} + I)_H\right] = 1.3\left[895 + \frac{5}{3}(797)\right] = 2890 \text{ kip ft}$$

$$M_{ua}(P) = 1.3\left[M_{DL} + (M_{LL} + I)_p\right] = 1.3\ (894 + 1309) = 2865 \text{ kip ft}$$

$M_{ur} = 2980 > M_{ua}(H) = 2890$ kip ft OK

Had the value for M_{ur} been significantly smaller than load factor moment applied, it would be possible to use nonprestressed reinforcement in the manner allowed by the Spec. Article 9.19. The contribution of this reinforcing to the tensile strength of the beam (at ultimate) can be computed from the relationship:

$$M'_{ur} = \phi\ A_s f_{sy} d \left[1 - \frac{0.6 p f_{sy}}{f'_c}\right] (1)$$ (Spec. Article 8.16.3.2.1)

where f_{sy} is taken as 60 ksi

3.2.5 Path of Prestressing Steel

The ideal path for the prestressing steel in a simple beam is parabolic with as much eccentricity from cgc at midspan as is possible. The reason for this should be evident in that the moment envelope for dead and live loads is also approximately parabolic. In a pretensioned girder, the parabolic path is approximated with harping points located at two or more positions in the span length.

At the anchorage ends, eccentricity from cgc may either be zero or some value above or below cgc which remains in the kern limit, so as to insure compression over the entire section. Kern limits for prestressed beams are: I/Ay_t, as the limit below cgc, and I/Ay_b as the limit above cgc.

---

(1) This must use an equivalent compression block that is a combination of p/s and mild steel

$$a = \frac{A^*_s f^*_{su} + A_s f_{sy}}{0.85 f'_c b}$$ or equivalent equation for flanged sections.

Changing the eccentricity of cgs at the ends (but remaining in the kern) is an effective means of controlling the deflection pattern of the beam, and is a method often used to establish the condition that DL deflection and prestress uplift are equal values of opposite sense.

3.2.6 Shear

Due to the complicated nature of the prestress shear calculation, as introduced in the 1977 AASHTO, this topic is completely covered under 3.4.12 "Design of a 2-Span Continuous Cast-In-Place Prestressed Box Girder – Shear."

3.2.7 Deflections

The upward deflection due to the uniform load and end eccentricity of the post-tension force is calculated by the equation:

$$p = \frac{PL^2}{48EI}(5e_2 + 6e_1) \text{ when } e_1 \text{ is below girder center of gravity.}$$

$$p = \frac{PL^2}{48EI}(5e_2 - 6e_1) \text{ when } e_1 \text{ is above girder center of gravity.}$$

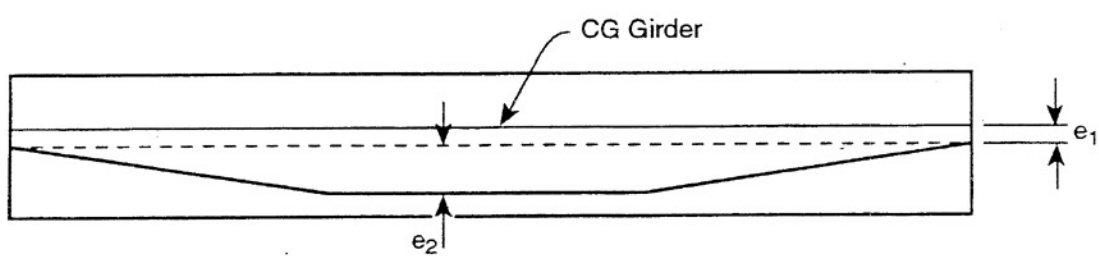

The upward deflection due to the concentrated loads at the harping points and end eccentricity of the pretension force is calculated by the equation:

$$\Delta p = \frac{PL^2}{216EI}(23e_2 + 27e_1) \text{ when } e_1 \text{ is below girder CG.}$$

$$\Delta p = \frac{PL^2}{216EI}(23e_2 - 27e_1) \text{ when } e_1 \text{ is above girder CG.}$$

For deflection calculations assume:

$$E_c = W_c^{1.5} \times 33\sqrt{f'_c}$$

$$= 150^{1.5} \times 33\,\frac{\sqrt{4000}}{1000} = 3834 \text{ ksi}$$

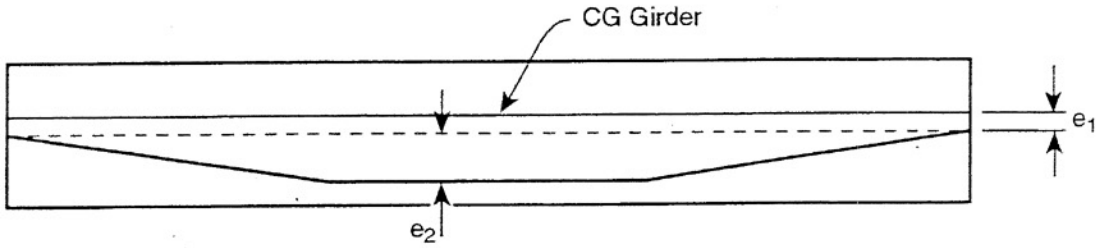

Deflections due to dead loads are:

$$\Delta DL = \frac{5\,w\,L^2}{384\,EI}$$

At the time of stressing the midspan of the girder will rise by an amount equal to (ΔP_i - ΔDL_{gdr}). Because the bottom fiber is more highly stressed than the top fiber, the girder will continue to rise with the passage of time (this is true even though the prestress force decreases). The total amount that the girder will rise is dependent on its age at the time the uniform load of the slab concrete is applied.

Allowances can be made for this situation using the following values for coefficient of creep.

Time	Coefficient of Creep
2 weeks	1.25
9 weeks	1.50
20 weeks	1.75

It is common for us to assume in camber calculations, that the coefficient of creep is approximately 1.5 and that the prestress force has relaxed to a value of about 0.89 P_i.

3.3.0 Design of an "I" Girder Continuous for Live Load

Most multi-span structures using precast prestressed girders are designed for continuity under live loading. This eliminates bearings and expansion joint details at the bents and provides riding qualities superior to those of simple span construction. There are also the added advantages of reduction of prestressing force, reduction of required concrete strengths, and some overall economies resulting from the simplification of details.

Assume the use of the same typical section and standard girders as were used in the previous example (Section 3.2.0).

Using a constant moment of inertia, the frame shown (when loaded to produce maximum conditions) yields the following live loads plus impact moments and DL_{rail} moments (see Table 3-4).

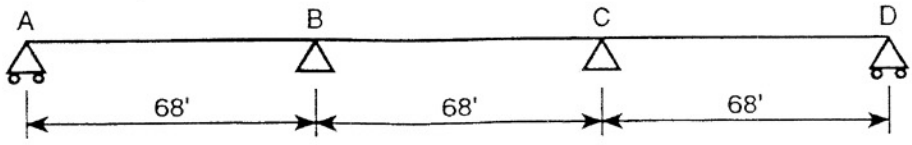

$M_{(LL+I)H}$	$M_{(LL+I)P}$ (Kip-ft)	$M_{D\ RAIL}$ (Kip-ft)	$M_{D\ AC}$ (Kip-ft)	(Kip-ft)
Span AB and CD	613	995	54	74
Span BC	513	820	18	25
Comments	Positive moment per girder at midspan			
Supports B and C	-477	-1188	-73	-100
Comments	Negative moment at face of support			

Table 3-4

Reinforcing for negative moment is placed in the top slab in structures of this type. The girders will resist dead load stresses as simple span members, but will act as continuous frame members when loaded by the rail, AC surface, live and impact loading.

Table 3-5 indicates the design moments for these girders.

The girder design procedure is the same as shown previously and therefore will not be repeated in this example.

	M_{GRD} (Kip-ft)	$M_{D\ SLAB}$ (Kip-ft)	$M_{D\ RAIL}$ (Kip-ft)	$M_{D\ AC}$ (Kip-ft)	$M_{(LL+I)H}$ (Kip-ft)
Span AB and CD	289	387	54	74	613
Span BC	289	387	18	25	513

Table 3-5

3.3.1 Negative Reinforcement

The remaining element of design for this type of structure is to determine the amount of negative reinforcing over the bents as required by the loads for which the structure will act as a continuous frame.

Assume that the design of the girders requires f'_c to be 4000 psi. We will design by ultimate strength theory using load factors of 1.3 $[D + 5/3\ (L + I)_H]$ or 1.3 $[D + (L + I)_P]$ whichever produces the greater moments in order to be consistent with the design of the girders.

For this example assume that the "compression flange" section of the I girder has an effective depth or $h_f = 8.75$ in. so that the analysis may be based on a rectangular section condition.

The ultimate resisting moment of rectangular sections with tension reinforcement only is calculated by:

$$M'_{ur} = \phi A_s f_y \left(d - \frac{a}{2}\right) = 2.25(2d - a)A_s$$

where

$a = \dfrac{f_{sy} A_s}{0.85 f'_c b}$, $\phi = 0.90$, d and a are in inches and A_s is in square inches.

$M_{ua\ H\ Loads} = 1.3\ (173 + \frac{5}{3} \times 477) = 1258$ kip ft

$M_{ua\ P\ Loads} = 1.3\ (173 + 1188) = 1769$ kip ft — controls

$M_{ua} = 1769$ kip ft

$d = 46.5$ in.

$b = 19$ in.

$b_w = 7$ in.

$h_f = 8.75$ in.

$f'_c = 4000$ psi (PCPS Girder Concrete) (MTD 11-3)

$$A_s = \frac{M_{ur}}{2.25(2d - a)} \qquad a = \frac{f_{sy} A_s}{0.85 f'_c b}$$

$$= \frac{1769}{2.25 \times (2 \times 46.5 - a)} \qquad = \frac{60 \times A_s}{0.85 \times 4 \times 19}$$

$$= \frac{786.2}{93 - a} \qquad = 0.929\ A_s\ (\text{in.})$$

Let $a = h_f = 8.75$ in.

$a = 8.75$ in. $\quad A_s = 9.32$ in.^{2}

$a = 8.66 \quad A_s = 9.32$

$a = 8.66 < 8.75$ in. — OK

$A_s = 9.32$ in.^{2}

Note: A_s can also be found by solving a quadratic equation formed from the above relationships between A_s and a.

From reinforced concrete design,

$$A_{s\,max} = 0.0214\ b_w d + 0.75\ A_{sf} = 0.0214\ b_w d + 0.75 \times \frac{0.85 f'_c (b - b_w) h_f}{f_y}$$

$$A_{s\,max} = 0.0214\ (7 \times 46.5) + 0.75 \times \frac{0.85 \times 4.0 \times (19 - 7) \times 8.75}{60} = 11.43 > 9.32\ \text{in.}^2 \text{ — OK}$$

Assume additional #9 bars are to be used as mild steel, in conjunction with the continuous top mat longitudinal slab bars shown on page 8-30 of *Bridge Design Details.*

Try 9- #9's in addition to the continuous slab bars for each girder.

$A_s = 9 \times 1.0 + 0.80 = 9.80 > 8.30\ \text{in.}^2$ — OK

$M_{ur} = 2.25 \times [(2 \times 46.5) - 9.10] \times 9.80 = 1850 > 1769$ kip ft — OK

Therefore, add 9- #9's to slab reinforcement for ultimate moment. At least ⅓ of negative reinforcement shall be extended past the point of inflection, $9.32/3 = 3.11\ \text{in.}^2$. Make 3- #9's continuous and place over each girder.

$A_s(\text{continuous}) = 3 \times 1.0 + 0.80 = 3.80 > 3.11\ \text{in.}^2$ — OK (Spec. Article 8.24.3.3)

See Figure 3-6 for negative ultimate moments and reinforcing layout. Bar cutoffs would be governed by the specifications for reinforced concrete, including extensions beyond the point of inflection.

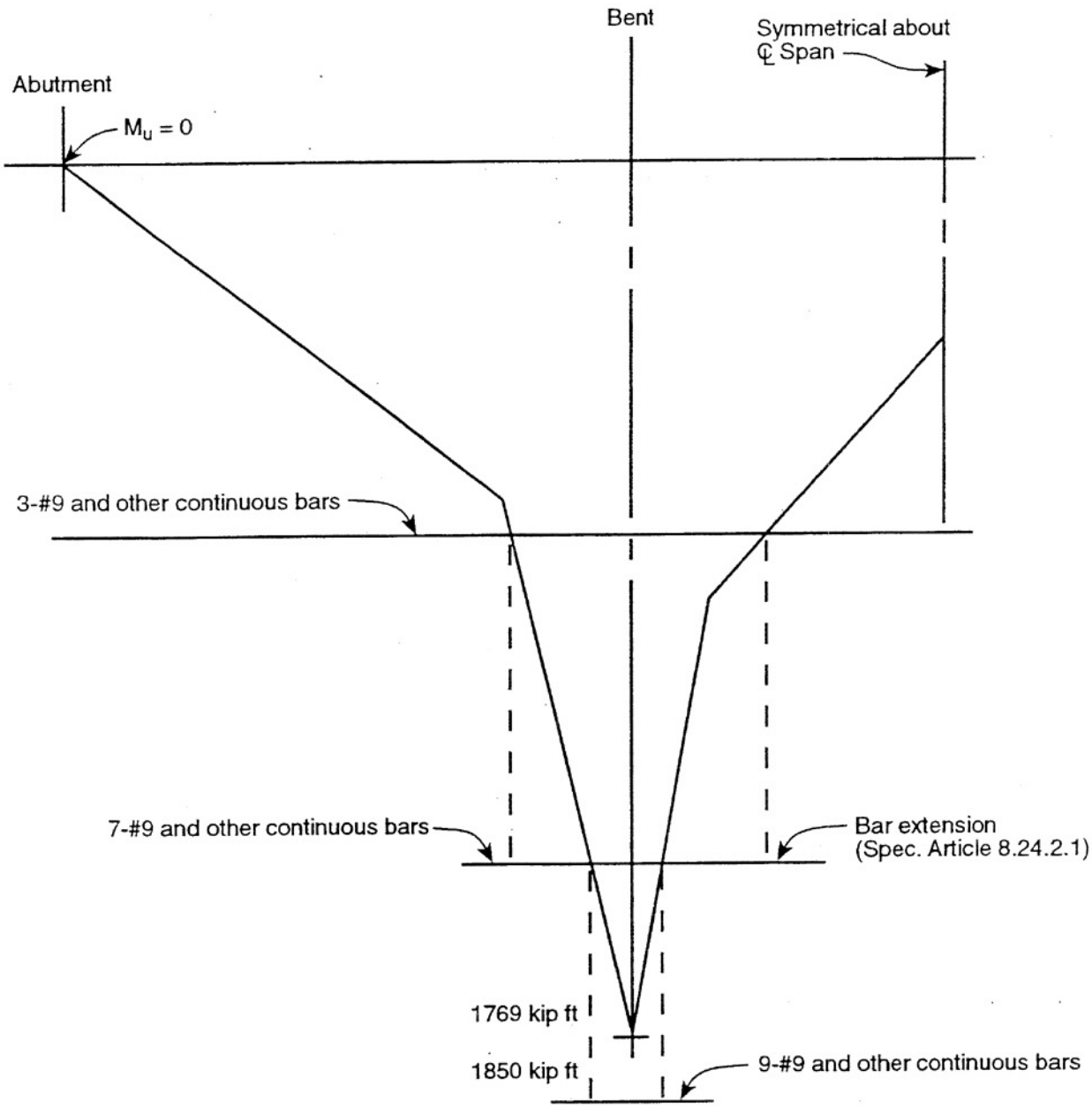

Negative Moments (Ultimate)
1" = 400 kip ft
Figure 3-5

3.3.2 Summary

No attempt is made in this section to cover all steps of the design. For those not covered, the analysis will be similar to the illustrations in Section 3.2 "Design of a Simple Span Prestressed Precast I Girder Bridge". Among these items are: Girder Design, Deflections, Shear, Ultimate Moment Design.

3.4 Design of a 2-span Continuous Cast-In-Place Prestressed Box Girder Superstructure

3.4.1 Introduction

The design of continuous post-tensioned concrete members differ from the design of precast members in that secondary moments are induced in the members due to prestressing. Precast members are generally designed to be simply supported for dead load, and continuous for additional dead load and live load, whereas the cast-in-place box girder is designed as continuous for all loadings. Also, the cable path is usually much longer, and the effects of friction loss due to the angle change play a role in the design process. Certain design criteria and specifications also differ between the two types of design.

This section proceeds by hand similar to the way you would input into the BDS computer program. Bridge geometry is found, structure loading is calculated, a cable path is introduced, prestress losses, stresses, and cable force are then calculated, and ultimate moment and shear are checked. The reader should always hand check some of the calculations produced by BDS, and use the plotting options to graphically check results.

3.4.2 Cross-Sectional Geometry

The designer usually has limited information when the design process begins. For purposes of this example problem, the following information is given:

* Continuous 2-span cast-in-place box girder superstructure.

* Span lengths of 162 and 150 feet.

* EOD to EOD width of 37' - 6"

* Column longitudinal moment of inertia given a 92 ft^4.

The elevation view of this frame is shown in Figure 3–8. Given this preliminary information, it is the designer's job to develop the typical and longitudinal sections.

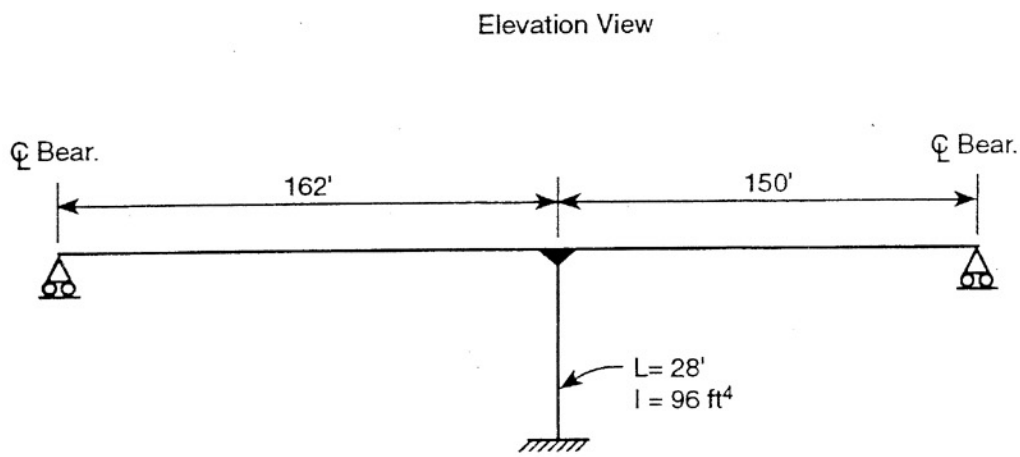

Figure 3-7

3.4.2.1 Structure Depth

The depth of a superstructure is a function of the span length. The depth-to-span ratio equates the depth of the superstructure to the length of the span. The AASHTO recommended depth-to-span ratio for CIP post-tensioned box girders is 0.045 for single span superstructures and 0.040 for continuous spans. The suggested structure depth of the example problem is:

$D = r * L$ Where: D = Structure depth (ft)

r = Depth-to-span ratio

$D = 0.04 * 162ft = 6.48ft$ L = Span Length (ft)

Use D = 6' - 6"

When span lengths are of similar length on the same structure, is usually a good idea to use the same depth for the entire structure.

3.4.2.2 Girder Spacing

The spacing of girders is a function of the depth of the structure. For a CIP post-tensioned box structure, it is suggested that the girders be spaced not more than 2 times the structure depth. The suggested maximum girder spacing for the example problem is:

$S < 2 * D$ Where: S = girder spacing (C/L to C/L)

D = Structure Depth (ft)

$S < 2 * 6.5ft$ = **13 ft. Maximum**

Using an overhang width of 4' - 0", the C/L to C/L distance between the exterior girders is:

37.5 ft - 2 (4.0 ft) - 2 (0.5 ft) = **28.5 ft.**

Trying 3 girders, 2 bays, we need 28.5 ft/2 bays = 14.25 ft, girder spacing, which is greater than the suggested maximum value. If we try 4 girders, 3 bays, we have a girder spacing of 28.5 ft/3 bays = **9.50 ft**, which is within the suggested range.

3.4.2.3 Typical Section

The width of the overhang is 4'-0" from the face of the exterior girder to the EOD. The thickness of this overhang shall be 7 in. at the EOD, flaring to 12 in. at the face of the exterior girder. All girders shall be 1'-0" wide, with the exterior girders flaring to 18in at the anchorages. The length of this girder flare shall be 16ft, and the structural effects of the 6in. increase in web width will be neglected in future analysis.

The deck and soffit thickness is a function of the clear distance between two adjacent girders. The clear distance for the example problem is 9'-6" – (2'-6") = 8'-6". The *Bridge Design Details* manual contains a table showing the design thickness of the deck and soffit as a function of clear spacing between girders. These thicknesses are a product of the AASHTO specifications. It should be noted that much of the steel contained in the superstructure is also designed as a function of girder spacing, and is shown in the table mentioned above. The deck and soffit thickness corresponding to a clear distance of 8' - 5" are 8.125 in. and 6.375 in. respectively. Four-inch fillets are to be located between perpendicular surfaces except for those located adjoining the soffit. Figure 3–8 shows the typical section based on the above design procedure.

Typical Section

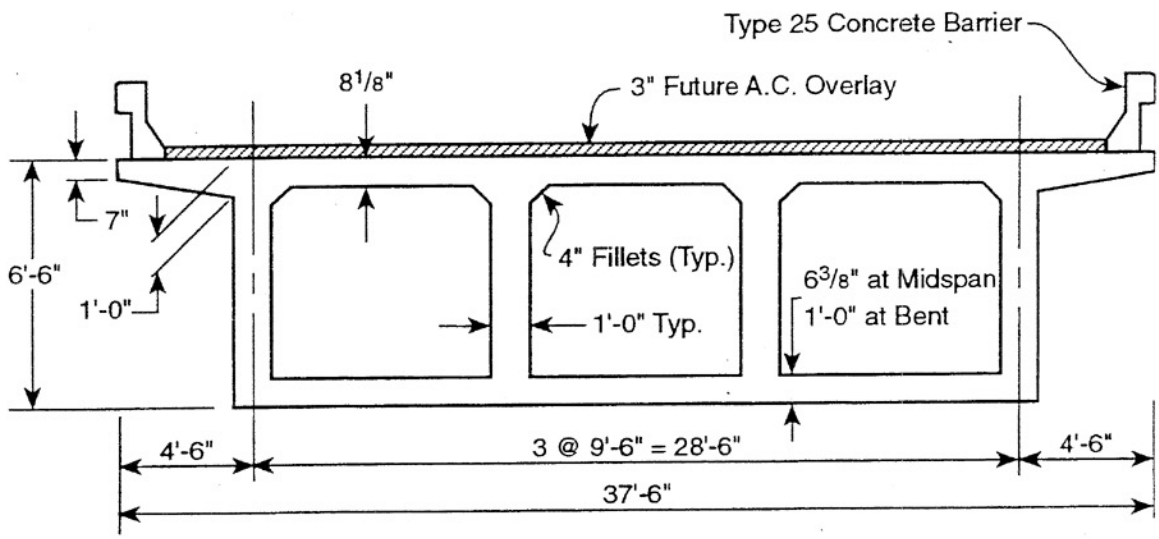

Figure 3-8

3.4.3 Loads

After the development of the elevation view and typical section, there is enough information to analyze the frame under the effects of gravity loads. There are several ways to accomplish this, but the most commonly used method currently used at Caltrans is the use of the BDS frame analysis program. Section and member properties for the example problem have been input into this program based on the elevation view and typical section, and the output is included in the following several pages. The BDS program is well suited to analyze both gravity loads *and* the effects of prestressing. However, it is important to know how to do the prestressing analysis by hand for two reasons. First, hand analysis leads to a thorough understanding of prestressing mechanics, and second, hand analysis is a great method for checking computer results.

3.4.3.1 Dead Load

The term "dead load" refers to the weight of the box girder, which includes the deck, girders and soffit. BDS computer output relating to dead load is referred to as "Trial 0". The superstructure weight used to develop the section properties is 150 lbs./ft.^{3} Page 3 of the BDS output contains the relevant section properties associated with dead load, and they are summarized as follows:

Property	Location Midspan	Face of Bent
Area (ft^2)	63.48	75.42
$Y_{(b)}$ (ft)	3.70	3.24
1 (ft^4)	400.29	487.09

The term $y_{(b)}$ is defined as the distance from the center of gravity to the bottom fiber of the superstructure. Horizontal member moments, shears, and stresses are tabulated on Page 9 of the BDS output.

3.4.3.2 Additional Dead Load

Additional dead load refers to dead load that is applied to the initial section. In the example problem, "ADL" refers to the weight of the future A.C. overlay and the Type 25 barrier rail. Most new bridges are designed based on a future A.C. overlay weight of 35 lbs./ft.^{2} This value equates to no overlay thickness of 3 inches, using a unit weight of A.C. of 140 lbs/ft^3. The uniform weight of the future A.C. overlay is calculated as follows:

$$\omega_{(A.C.\ Overlay)} = (\text{Deck width - Barrier width}) * 35\ \text{lbs./ft}^2$$

$$= [37.5' - 2\ (1.75\text{ft})] * 35\ \text{lbs.} / = 35\ \text{lbs./ft}^2$$

$$= 1190\ \text{plf}$$

$$\omega_{(A.C.\ Overlay)} = \mathbf{1.19\ klf}$$

Type 25 barrier rail has a weight of 0.392 klf. Therefore $w_{(barrier)} = 0.392\ \text{klf} * 2 = \mathbf{0.784\ klf.}$ BDS computer output relating to additional dead load is referred to as "Trial 1". Additional dead load is not load resistant, and has no structural significance whatsoever.

3.4.3.3 Live Load

The term "live load" refers to AASHTO design trucks which represent worst case loading conditions. The two load cases that are used in the design of the box girder are Case 1 and Case IV, which are the HS20-44 and Permit truck, respectively. The BDS computer program calculates moments, shears and stresses using a live load generator, which utilizes the influence line concept. The only information that BDS needs is the number of live load lanes. The live load lane calculation for the box girder is shown below:

$$\#\ \text{LL lanes} = \text{Deck width} / 11\ \text{ft.}$$

$$= 37.5\text{ft} / 14\ \text{ft.}$$

$$\#\ \text{LL lanes} = \mathbf{2.68\ lanes}$$

The same number of lanes is used for both the HS20-44 and permit truck loading cases. BDS computer output relating to the HS20-44 and the permit truck loading cases are referred to as "LL No. 1" and "LL No. 4", respectively.

3.4.4 Longitudinal Section

At this point, the items of interest regarding the longitudinal section are the soffit flare and cable path. The longitudinal section is included as Figure 3–9.

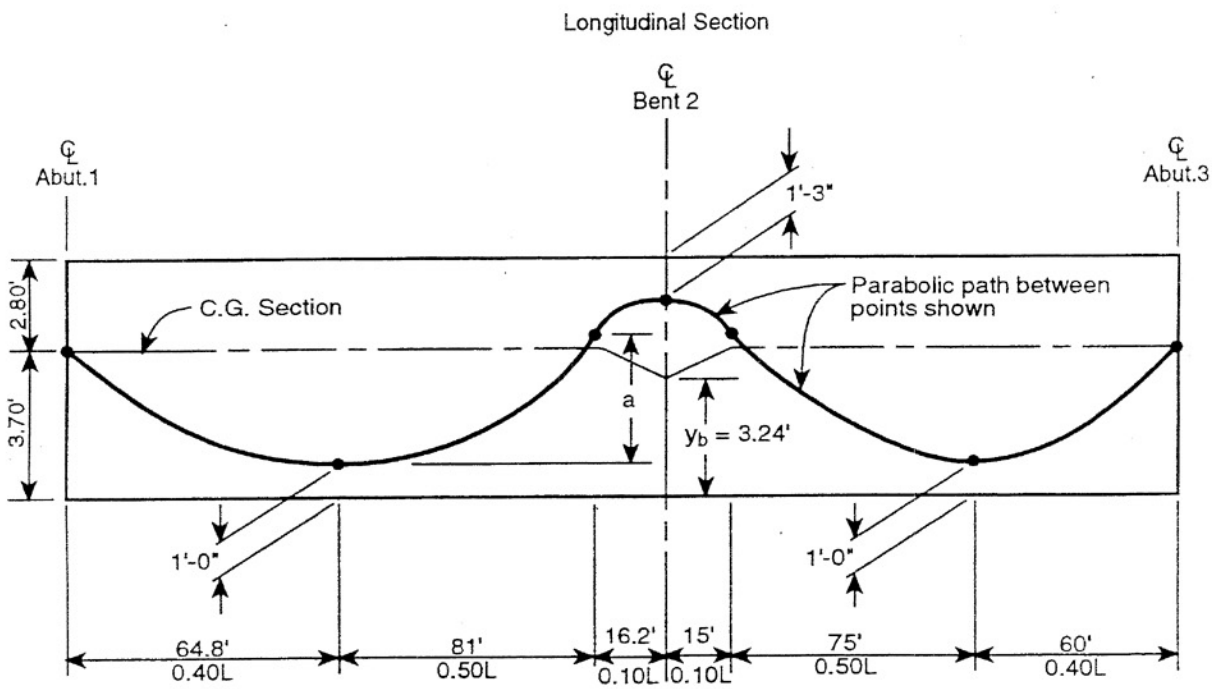

Figure 3-9

3.4.4.1 Soffit Flare

The soffit is typically flared to 1'-0" thick at the face of a bent cap in a CIP post-tensioned box office structure, the main reason for this flare is to lower the center of gravity of the superstructure, and thus, increase the eccentricity between the CG of the P/S steel and the C.G. of the superstructure. Usually, high tensile stresses are present at the top fibers of the superstructure near the bent cap. An increase in eccentricity in this area allows for more tensile stresses to be "unloaded" by the primary moment due to prestressing, which is simply:

$$M_p = P_j \times e$$

Where: M_p = Primary moment due to prestressing

P_j = Total jacking force

e = Cable path eccentricity

Figure 3-9 shows graphically the effects of soffit flare. In the example problem, the flare lengths are assumed to begin at the 0.9L point of Span 1, and the 0.1L point of Span 2.

3.4.4.2 Cable Path

Generally, the maximum eccentricities (vertical distance between the C.G. of the superstructure and the C.G. of the P/S steel) should occur at the points of maximum gravity moment. These points are usually at the bent cap, and for our example, close to the 0.4L and 0.6L points of Spans 1 and 2, respectively. The maximum eccentricity that is physically possible depends on the amount of prestressing steel required and the geometric limitations created by the transverse steel in the deck and soffit. There must be enough clearance to accommodate a wide range of currently used prestressing systems.

The first step in determining the cable path is to get a good preliminary estimate of the P_j. In order to estimate P_j, it is necessary to estimate the pounds of prestressing steel per square foot of deck area.

Using the chart shown in BDA 11-61 for 2- Span Box Girder Steel in Lbs. per deck area, with a d/s ratio of 0.4 and an average span length of 156 feet, the chart reads an estimate of 4.2 pounds of P/S steel per sq. ft. In order to estimate the total pounds of P/S steel needed for the entire structure, we simply multiply the square foot estimate x deck area as shown below:

#P/S steel = 4.1 lb/ft2 × (37.5ft × 312ft) - **47,970 lbs**

BDA 11-11 contains an equation that is used to estimate P_j or #P/S steel, given one or the other. The equation is as follows:

$$\#P/S\ steel = \frac{P_j}{(0.75)(270)} \times Length \times 3.4$$

$$\text{Rearranging: } P_j = \frac{(0.75)(270)(\#\,P/S\ Steel)}{(Length)(3.4)}$$

Where: 0.75 % of Ultimate

270 =Ultimate Strength of P/S steel

Length = Bridge length

$$Pj = \frac{(0.75)(270)(47.970)}{(312)(3.4)}$$

9380 Kips/4 girders = **2290 kips/girder**

Now that we have a preliminary estimate of Pj, we can find the minimum distance between extreme tensile fibers in the superstructure and the C.G. of the P/S steel. Referring to MTD 11-28, this distance = "k" + "D", "k" values have been assumed and are shown in MTD 11-28. The minimum distances between the extreme tensile fibers and the C.G. of the P/S steel are as calculated:

At midspan: Min. Dist. = "K" + "D " = $4\frac{7}{8}$ in. + $7\frac{1}{2}$ in. = 12.375 in.

∴ Use **12 in.**

At Bent: Min. Dist. = "K" + "D" = $6\frac{5}{8}$in. + $7\frac{1}{2}$ in. = $14\frac{1}{8}$ in.

Use **15 in.**

Figure 3-9 shows the above results for the vertical dimension of the cable path at the 0.4L and centerline Bent 2 locations. The final step in defining the cable path is to find the vertical position of the two inflection points, located at the 0. 9L and 0.1L points of Spans 1 and 2 respectively. By definition the position of "a" in Figure 3-9 is located where the straight line between the two adjacent intersects the horizontal location of the point of inflection.

By similar triangles,

$$\frac{\text{"a"}}{81\text{ ft}} = \frac{4.25\text{ ft}}{97.2\text{ ft}} \rightarrow \underline{\text{"a"} = 3.54\text{ ft}}$$

$$\frac{\text{"b"}}{75\text{ ft}} = \frac{4.25\text{ ft}}{90\text{ ft}} \rightarrow \underline{\text{"b"} = 3.54\text{ ft}}$$

3.4.5 Losses

The force applied to the prestressing strands, as a function of A'_s is: P_j = (0.75)(270 ksi)(A'_s) is: P_j = (0.75)(270 ksi)(A'_s). However, because losses of force in the strands occurs, the actual amount of force in the P/S path will be somewhat less than the jacking force. The three types of losses addressed in the design of the CIP post-tensioned box girder bridge are as follows:

1. Frictional losses.
2. Anchor set losses
3. Long term losses

Because we first have to calculate losses before we can solve for P_j, all losses are found as fractions of this jacking force.

3.4.5.1 Frictional Losses

Due to the frictional forces that develop from the curvature of the prestress tendon and the deviation of the tendon within the semirigid duct. (Friction and wobble coefficients).

Angle changes

$$\alpha = \frac{2e}{L}\begin{cases}\text{where e is the vertical distance of the parabola between control} \\ \text{points and L is the horizontal distance between control points}\end{cases}$$

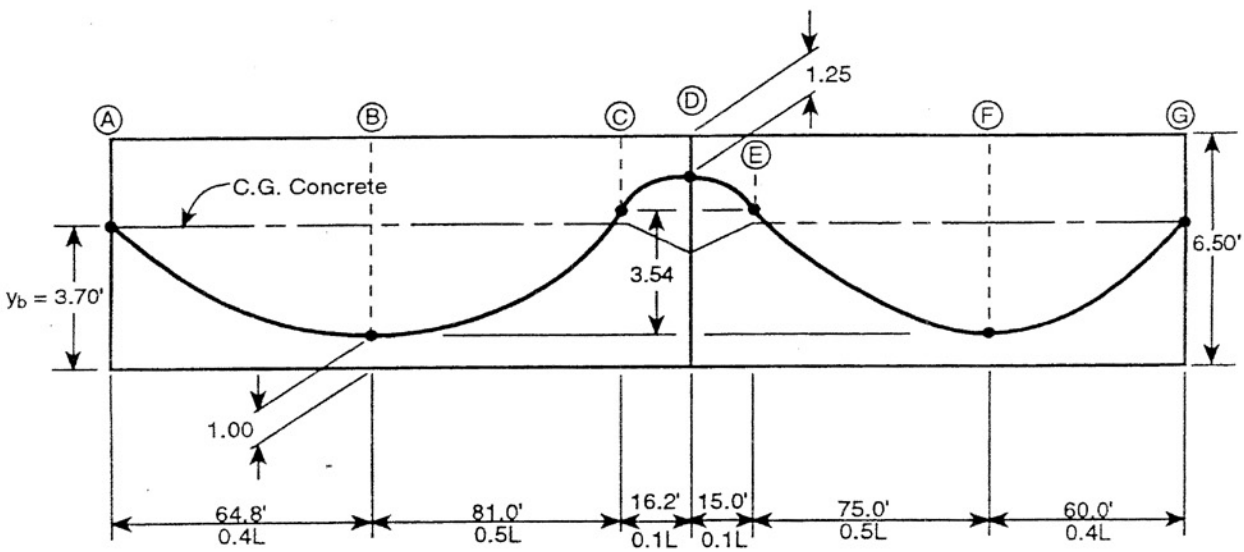

By similar triangles:

$$a = \frac{81.0\text{ft}}{81.0\text{ft} + 16.2\text{ft}}(6.5 - 2.25) = 3.542 \text{ ft}$$

$$b = \frac{75.0\text{ft}}{75.0\text{ft} + 15.0\text{ft}}(6.5 - 2.25) = 3.542 \text{ ft}$$

2. Friction loss coefficients

$$\alpha = \frac{2e}{L} \quad \rightarrow \quad \text{PT} \quad B \rightarrow \alpha = \frac{2(2.70)}{64.8} = 0.0833 \text{ RAD}$$

$$\text{PT} \quad C \rightarrow \alpha = \frac{2(3.54)}{81.0} = 0.0874 \text{ RAD}$$

$$\text{PT} \quad D \rightarrow \alpha = \frac{2(0.71)}{16.2} = 0.0874 \text{ RAD}$$

$$\text{PT} \quad E \rightarrow \alpha = \frac{2(0.71)}{15.0} = 0.0944 \text{ RAD}$$

$$\text{PT} \quad F \rightarrow \alpha = \frac{2(3.54)}{75.0} = 0.0944 \text{ RAD}$$

$$\text{PT} \quad G \rightarrow \alpha = \frac{2(2.70)}{60.0} = 0.0900 \text{ RAD}$$

Segment	(RAD) α	(RAD) cum α.	$-\mu\alpha$.	$e^{-(\mu\alpha)}$
$\overline{AB}$	0.0833	0.0833	– 0.0167	0.983
$\overline{BC}$	0.0874	0.1707	– 0.0341	0.966
$\overline{CD}$	0.0874	0.2581	– 0.0516	0.950
$\overline{DE}$	0.0944	0.3525	– 0.0705	0.932
$\overline{EF}$	0.0944	0.4469	– 0.0894	0.914
$\overline{FG}$	0.0900	0.5369	– 0.1074	0.898

F.C.i. $= e^{-(\mu\alpha + KL)}$ where: $\mu = 0.2$

$KL = 0$

Spec. 9.16.1 gives the equation for calculation of friction losses as:

$$T_o = T_x e^{(KL + \mu\alpha)}$$

The K value indicates friction wobble per foot of prestressing steel and is given a value of 0 for the galvanized rigid duct most widely used in cast-in-place post-tensioned bridges.

This value T_o is also called the initial force coefficient F.C.i which illustrate losses that occur immediately during the stressing operation before the strand is set and anchor set and long term losses occur.

The F.C.i values calculated between segments can be linearly interpolated along $^1/_{10}$ points and are given in Table 3-6.

3.4.5.2 Anchor Set Losses

The recommended method of detailing requires jacking the tendons to 0.75 $f'_{s\,max}$ and anchoring at a stress resulting from a minimum anchor set of $\frac{3}{8}$ in. (stress after anchor set not to exceed 0.70 f'_s).

The effect of anchor set on the cable stress is approximately as follows:

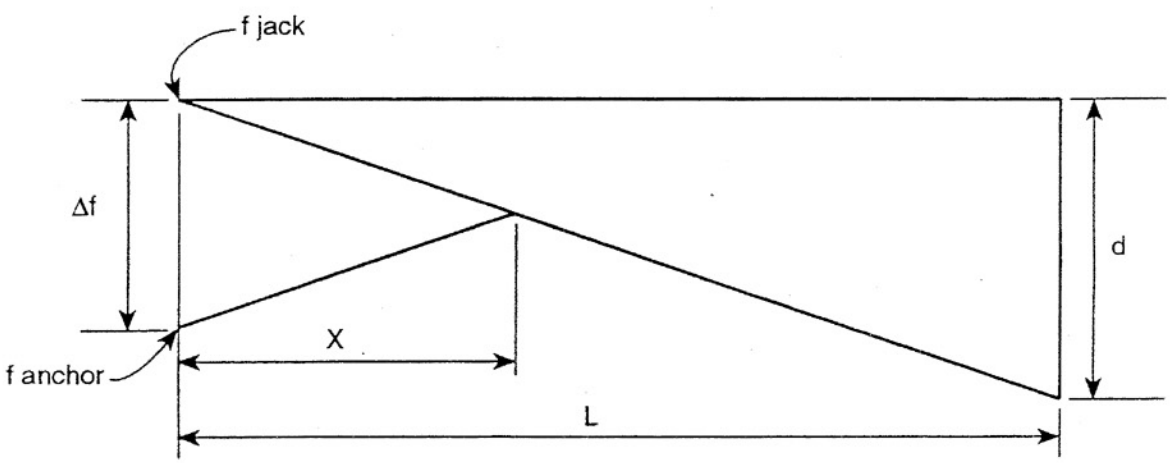

Figure 3-10

Δf = change in stress due to anchor set (ksi)

x = length influenced by anchor set (ft)

d = friction loss in length L (ksi)

L = length to a point where loss is known (ft)

ΔL = anchor set (in)

E = Modulus of Elasticity (ksi)

Assume $E = 27 \times 10^3$ ksi

average unit stress = E × (unit strain)

$$\frac{\Delta f}{2} = E\left(\frac{\Delta L}{12x}\right)$$

$$\Delta f = E\left(\frac{\Delta L}{6x}\right)$$

by similar triangles:

$$\frac{x}{\Delta f/2} = \frac{L}{d}$$

or

$$\Delta f = \frac{2dx}{L}$$

$$x = \frac{(\Delta f)L}{2d}$$

$$\frac{E(\Delta L)L}{6(x)2(d)}$$

rewriting

$$x^2 = \frac{E(\Delta L)L}{12d}$$

$$x = \sqrt{\frac{E(\Delta L)L}{12d}}$$

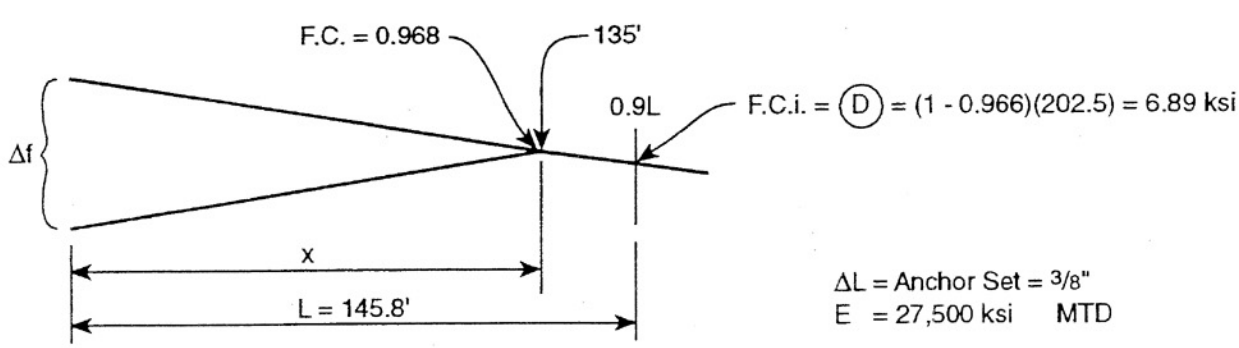

$$\sqrt{\frac{E(\Delta L)L}{12d}} = \sqrt{\frac{27{,}500(0.375)(145.8)}{12(6.89)}} = 134.85 < 145.8 \setminus \text{O.K.}$$ Length influenced by anchor set is less than PT. to which a loss is known. Similar triangle assumption valid.

$$\Delta f = \frac{2d_x}{L} = \frac{2(1-0.966)(134.85)}{145.8} = 0.063$$

3.4.5.3 Long Term Losses

Assume a low Relaxation Strand is used, *Spec.* Article 9.16.2.2 allows 20 ksi or 0.0988 P_j.

3.4.6 Force Coefficients

Final force coefficients (F.C.f) can be found algebraically by subtracting the anchor set and long term losses as shown in Table 3-6 from the initial force coefficients due to frictional losses. The last column show the ratio of initial to final forces.

Location	$e^{-\mu\alpha}$	F.C.i.	ASET	F.C. PJ	F.C.i./F.C.f
0.00L1	1.000	1.000	0.937	0.838	1.193
0.1L1		0.996	0.941	0.842	1.183
0.2L1		0.992	0.945	0.846	1.173
0.3L1		0.987	0.949	0.850	1.161
0.4L1	0.983	0.983	0.952	0.853	1.152
0.5L1		0.980	0.956	0.857	1.144
0.6L1		0.976	0.960	0.861	1.134
0.7L1		0.973	0.964	0.865	1.125
0.8L1		0.969	0.967	0.868	1.116
0.9L1	0.966	0.966	0.966	0.867	1.114
1.0		0.950		0.851	1.116
0.0L2	0.950	0.950		0.851	1.116
0.1L2	0.932	0.932		0.833	1.119
0.2L2		0.928		0.829	1.119
0.3L2		0.935		0.826	1.120
0.4L2		0.921		0.822	1.120
0.5L2		0.918		0.819	1.121
0.6L2	0.914	0.914		0.815	1.121
0.7L2		0.910		0.811	1.122
0.8L2		0.906		0.807	1.123
0.9L2		0.902		0.803	1.123
1.0L2	0.898	0.898		0.799	1.124

Table 3-6

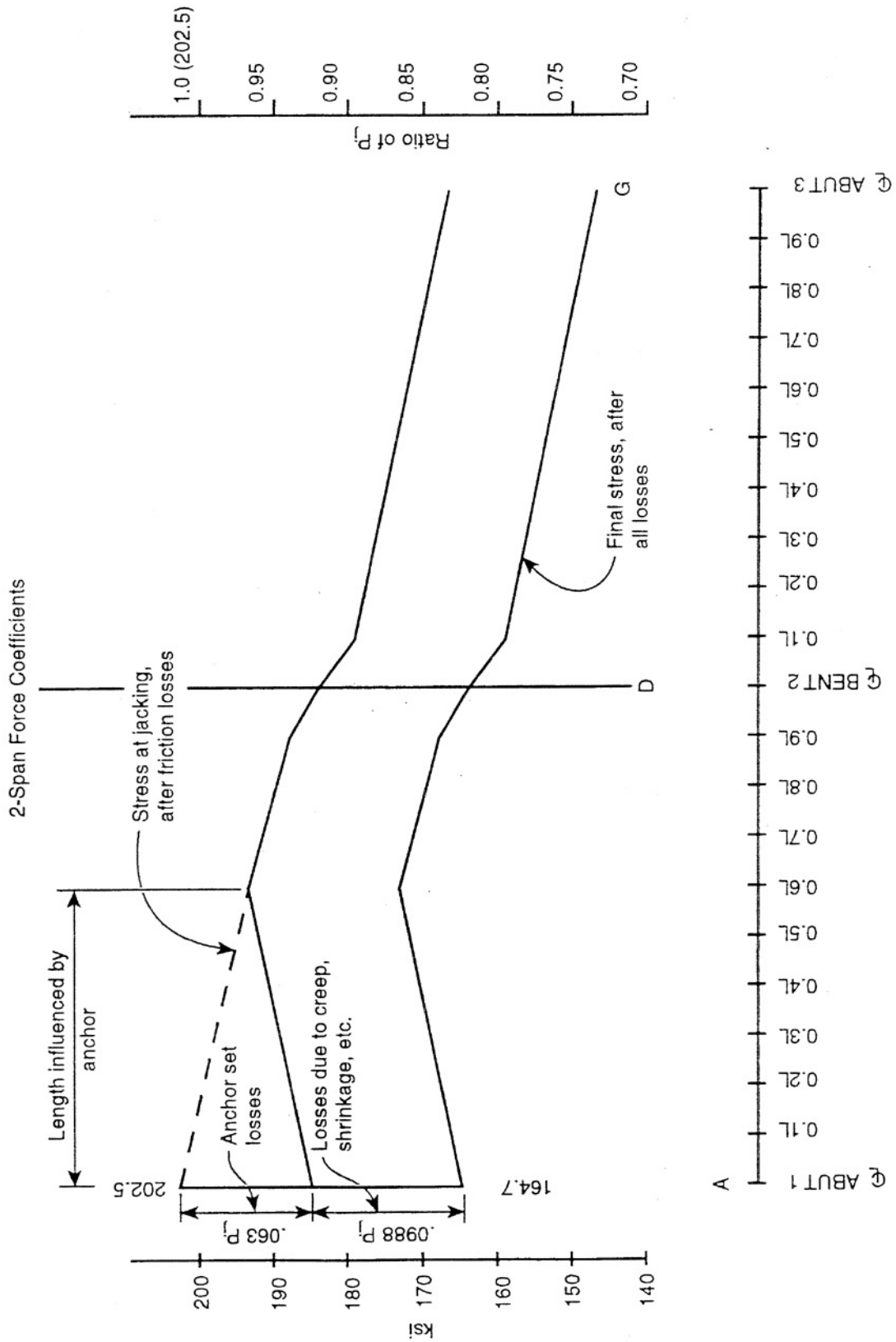
2-Span Force Coefficients
Length influenced by anchor
Stress at jacking, after friction losses
Anchor set losses
Losses due to creep, shrinkage, etc.
Final stress, after all losses
202.5
164.7
.063 Pj
.0988 Pj
ksi
200
190
180
170
160
150
140
Ratio of Pj
1.0 (202.5)
0.95
0.90
0.85
0.80
0.75
0.70
A
D
G
℄ ABUT 1
℄ BENT 2
℄ ABUT 3
0.1L
0.2L
0.3L
0.4L
0.5L
0.6L
0.7L
0.8L
0.9L

Figure 3-11

3.4.7 Secondary Moments

In addition to the "Pe" (primary) moments, secondary moments (M1) are introduced because of resistance to beam distortions as the prestressing is applied. The conjugate beam method is a general method for finding the magnitude of the secondary moments. This method involves the following procedures:

1) Each span is considered to be a simple span so that the ends can rotate freely. The applied moments are equal to a relative value of "Pe".

2) The angle of rotation at the ends of these simple spans caused by the "Pe" loads is found using the conjugate beam method.

3) Moments are applied at the ends of the beam which will rotate the angle of rotation back to zero. These are the fixed end secondary moments due to prestressing.

4) The final secondary moments over the supports are found by distributing these fixed end moments.

5) The total moment in the member due to prestressing in terms of Pj is the algebraic sum of the "Pe" value and the secondary moment. We call this the Moment Coefficient. This moment coefficient divided by the relative P can be thought of as an effective eccentricity, e′. A line through these e′ ordinates is called the thrust line, pressure line or c– line in some textbooks.

The dead and live load moments were computed neglecting the flare in the bottom slab. The secondary moment will be computed in the same manner. No appreciable error is introduced with this procedure since the increased "e" and increased "I" tend to compensate for each other. This is more accurate than measuring "e" from the neutral axis of the flared section with a minimum "I". The relative values of M/I at the bent are shown below:

Actual Ordinate

$$\frac{P_j e_{flare}}{I_{flare}} = \frac{0.75(2.00)}{458.75} = 0.00327$$

Neglecting Flare

$$\frac{P_j e_{min}}{I_{min}} = \frac{0.75(1.75)}{370.79} = 0.00354$$

Using e_{flare} And I_{min}

$$\frac{P_j e_{flare}}{I_{min}} = \frac{0.75(2.00)}{370.79} = 0.00405$$

The flare properties will, of course, be used to find stresses.

By the conjugate beam method, the rotation that would occur at the bent due to the "Pe" moments (if the beam was free to rotate) is equal to the reaction of the conjugate beam at that point. Take moments about point $\Sigma M_A = 0$.

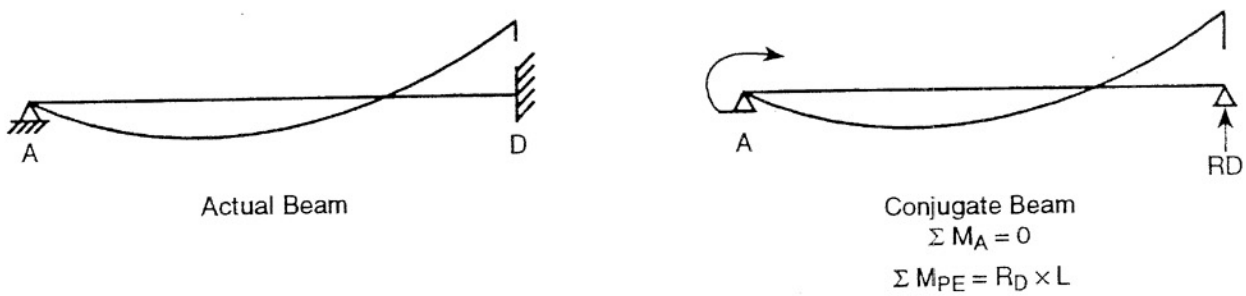

Figure 3-12

Secondary Moments

Span 1

	No.	Section	Area (P_jL/EI)	APM	Moment (P_jL2/EI)
1	1	(0)(0.1)	0	0.050	0
	2	(0.5)(– 0.994)(0.1)	– 0.0497	0.067	– 0.00333
2	3	(– 0.994)(0.1)	– 0.0994	0.150	– 0.01491
	4	(0.5)(– 0.723)(0.1)	– 0.0362	0.167	– 0.00604
3	5	(– 1.717)(0.1)	– 0.1717	0.250	– 0.04293
	6	(0.5)(– 0.434)(0.1)	– 0.0217	0.267	– 0.00579
4	7	(– 2.151)(0.1)	– 0.2151	0.350	– 0.07529
	8	(0.5)(– 0.152)(0.1)	– 0.0076	0.367	– 0.00279
5	9	(– 2.194)(0.1)	– 0.2174	0.450	– 0.09873
	10	(0.5)(– 0.109)(0.1)	– 0.0055	0.433	– 0.00236
6	11	(– 1.834)(0.1)	– 0.1834	0.550	– 0.10087
	12	(0.5)(– 0.360)(0.1)	– 0.0180	0.533	– 0.00959
7	13	(– 1.237)(0.1)	– 0.1237	0.650	– 0.08041
	14	(0.5)(– 0.597)(0.1)	– 0.0299	0.633	– 0.01890
8	15	(– 0.373)(0.1)	– 0.0373	0.750	– 0.02798
	16	(0.5)(– 0.864)(0.1)	– 0.0432	0.733	– 0.03167
9	17	(0.5)(– 0.373)(0.034)	– 0.0063	0.811	– 0.00514
	18	(0.5)(0.728)(0.066)	0.0240	0.878	0.02109
10	19	(0.728)(0.1)	0.0728	0.950	0.06916
	20	(0.5)(0.983)(0.1)	0.04915	0.967	0.04753
			– 1.1200		**– 0.38895**

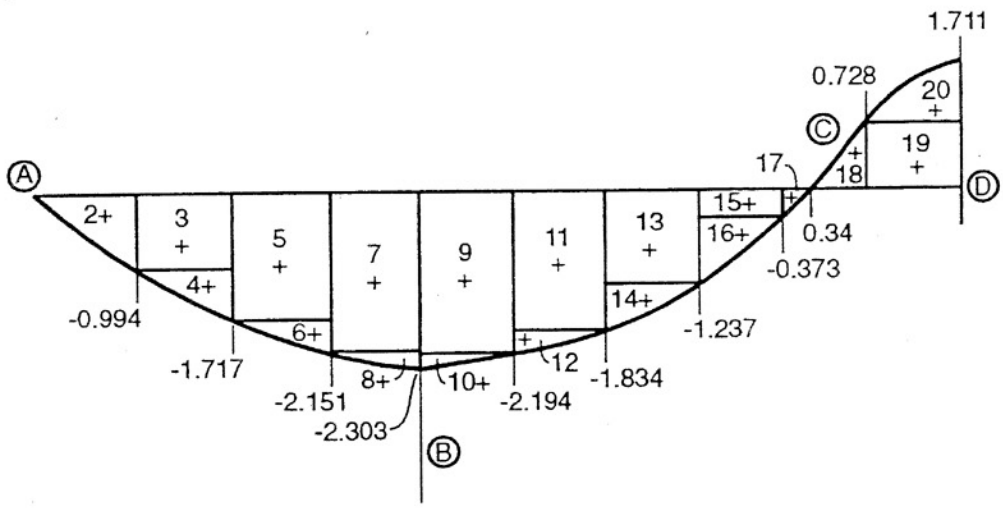

Span 2

	No.	Section	Area (PjL/EI)	APM	Moment (PjL2/EI)
1	1	(0)(0.1)	0	0.050	0
	2	(0.5)(– 0.945)(0.1)	– 0.0474	0.067	– 0.00318
2	3	(– 0.948)(0.1)	– 0.0945	0.150	– 0.01422
	4	(0.5)(– 0.690)(0.1)	– 0.0345	0.167	– 0.00576
3	5	(– 1.638)(0.1)	– 0.1638	0.250	– 0.04095
	6	(0.5)(– 0.414)(0.1)	– 0.02007	0.267	– 0.00553
4	7	(– 2.052)(0.1)	– 0.2052	0.350	– 0.07182
	8	(0.5)(– 0.149)(0.1)	– 0.0075	0.367	– 0.00273
5	9	(– 2.097)(0.1)	– 0.2097	0.450	– 0.09437
	10	(0.5)(– 0.104)(0.1)	– 0.0052	0.433	– 0.00225
6	11	(– 1.751)(0.1)	– 0.1751	0.550	– 0.09631
	12	(0.5)(– 0.346)(0.1)	– 0.0173	0.533	– 0.00922
7	13	(– 1.181)(0.1)	– 0.118	0.650	– 0.07677
	14	(0.5)(– 0.570)(0.1)	– 0.0285	0.633	– 0.01804
8	15	(– 0.356)(0.1)	– 0.0356	0.750	– 0.02670
	16	(0.5)(– 0.825)(0.1)	– 0.0413	0.733	– 0.03027
9	17	(0.5)(– 0.356)(0.034)	– 0.0061	0.811	– 0.00491
	18	(0.5)(0.700)(0.066)	0.0231	0.878	0.02028
10	19	(0.700)(0.1)	0.0700	0.950	0.06650
	20	(0.5)(1.011)(0.1)	0.0506	0.9	0.04888
			– 1.0650		**– 0.36737**

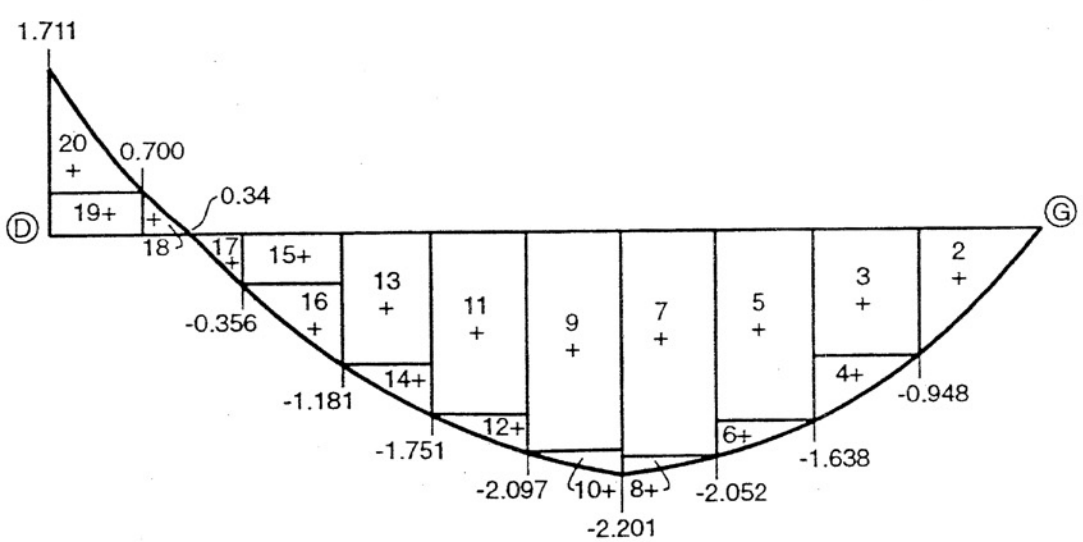

Secondary Moments Span 1

Conjugate reaction at D = rotation $= -0.38845 \dfrac{P_j L^2}{EI} \div L = -0.38895 \dfrac{P_j L}{EI}$

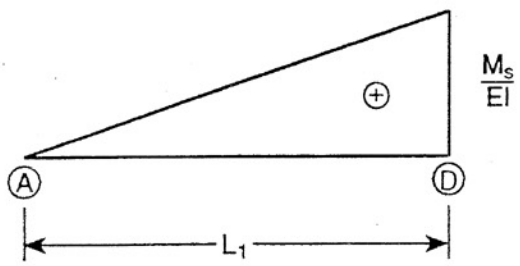

$$R_{DF}\, L = \frac{M_s}{EI} \times \frac{L}{2} \times \frac{2}{3}$$

$$R_D = \frac{M_s L}{3EI}$$

$$\frac{M_s L}{3EI} \; 0.38895 \frac{P_j L}{EI} = 0$$

$$\frac{M_s}{3} = 0.38895 P_j \qquad M_s = 3(0.38895)\, P_j$$

$$M_s = 1.1669\, P_j \quad \rightarrow \quad \mathbf{M_{s\ AD} = 1.1669}$$

Check:

$$\Sigma M_A = \frac{M}{EI}\left(M_P\right):$$

$$\left(\frac{-2.303}{EI} \times 0.2667L \times 0.2667L\right)$$

$$+\left(\frac{-2.303}{EI} \times 0.2893L \times 0.5447L\right) +$$

$$+\left(\frac{1.711}{EI} \times 0.083L \times 0.9447L\right) +$$

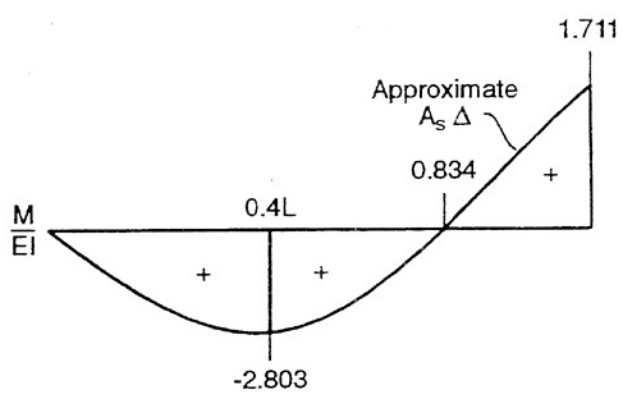

$$= -0.1638 \frac{L^2}{EI} - 0.3629 \frac{L^2}{EI} + 0.1342 \frac{L^2}{EI} = 0.3925 \frac{P_j L}{EI}$$

$$\frac{M_S}{3} = 0.3892\, P_j \qquad M_s = 3(0.3925) P_j$$

$$M_s = 1.1775\, P_j \quad \rightarrow \quad \mathbf{M_{s\ AD} = 1.1775}$$

$$\%\ \text{error} = 1.1775 - \frac{1.1775 - 1.1669}{1.1669} = \mathbf{0.9\%} \therefore \text{OK}$$

Secondary Moments Span 2

Conjugate reaction at D = Rotation = $-0.36737\,\dfrac{P_j L^2}{EI} = -0.36737\,\dfrac{P_j L}{EI}$

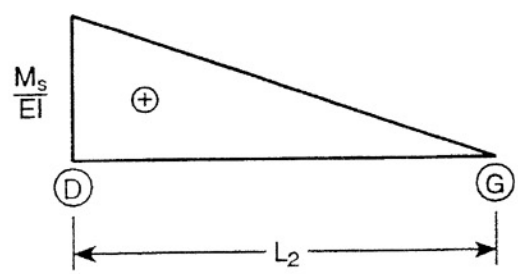

$$R_{DF}\,L = \frac{M_s}{EI} \times \frac{L}{2} \times \frac{2}{3}$$

$$R_D = \frac{M_s L}{3EI}$$

$$\frac{M_s L}{3EI} - 0.36737\,\frac{P_j L}{EI} = 0$$

$$\frac{M_s}{3} = 0.36737\,P_j \quad \rightarrow \quad M_S = 3\,(0.36737)\,P_j$$

$$M_S = 1.10211 \quad \rightarrow \quad \mathbf{M_{SC\text{-}D} = 1.10211\,P_j}$$

Check:

$$\Sigma M_A = \frac{M}{EI}\left(M_P\right):$$

$$\left(\frac{-2.201}{EI} \times 0.2667L \times 0.2667L\right)$$

$$+\left(\frac{-2.201}{EI} \times 0.2593L \times 0.5447L\right) +$$

$$+\left(\frac{1.711}{EI} \times 0.083L \times 0.9447L\right) +$$

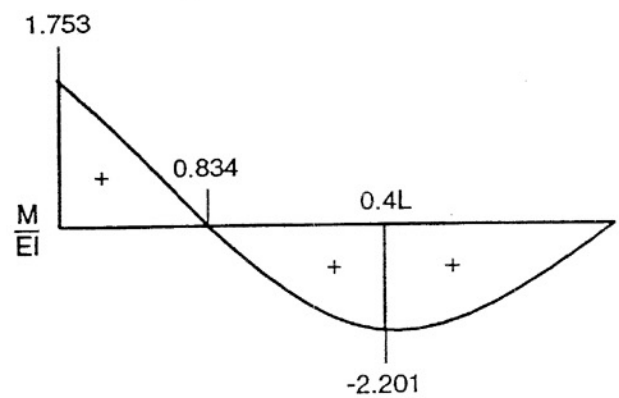

$$= 0.1566\,\frac{L^2}{EI} - 0.3468\,\frac{L^2}{EI} + 0.1342\,\frac{L^2}{EI} = 0.3692\,\frac{L^2}{EI}$$

$$\frac{M_s}{3} = 0.3659\,P_j \quad \rightarrow \quad M_s = 3(0.3692)\,P_j$$

$$M_s = 1.1076\,P_j \quad \rightarrow \quad \mathbf{M_s = 1.1076\,P_j}$$

% error = 1.1076 – 1.10211/ = **0.5%** ∴ OK

Distributed End Moments

Summary of fixed end moments (conjugate beam):

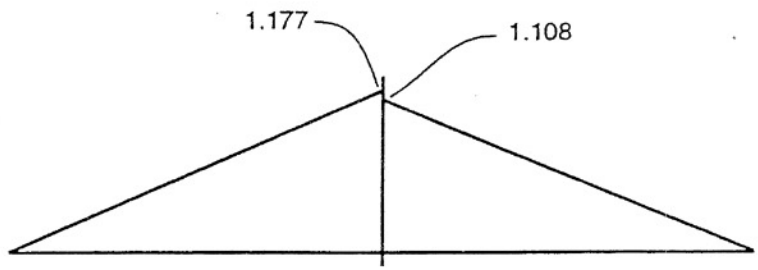

L = 162 ft
E = 3600 ksi
I = 400.3 ft^4
R = 8896

F = 1
K = 26688
D = 0.272

F = 1
K = 28821
D = 0.293

L = 150 ft
E = 3600 ksi
I = 400.3 ft^4
R = 9607

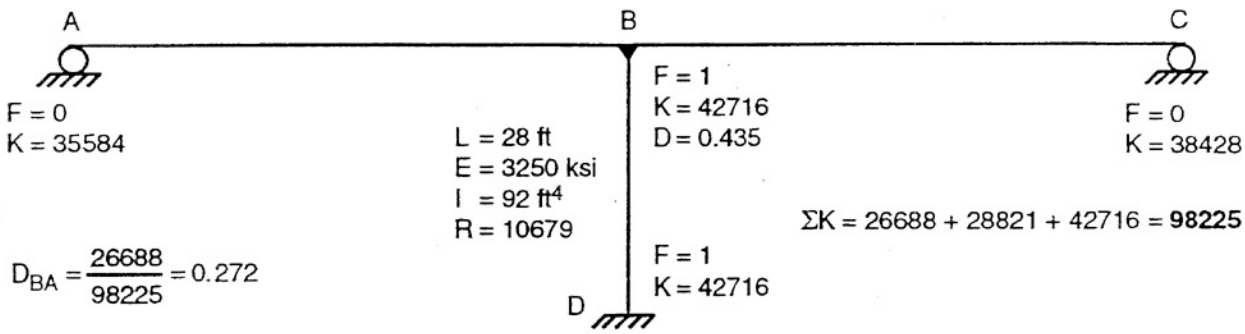

$\Sigma K = 26688 + 28821 + 42716 = \mathbf{98225}$

$$D_{BA} = \frac{26688}{98225} = 0.272$$

$$D_{BC} = \frac{28821}{98225} = 0.293$$

$$D_{BD} = \frac{42716}{98225} = 0.435$$

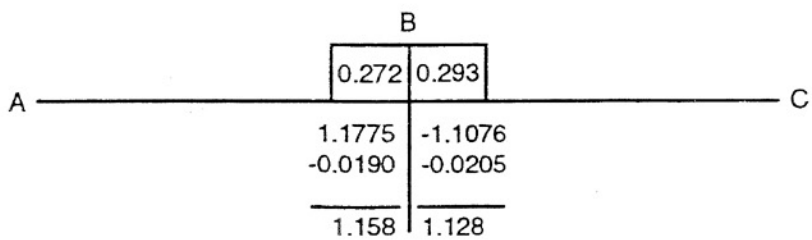

Figure 3-13

Eccentricities at each 10th Point:

$$e(x) = \left(y_{max}\left(1 - \frac{x^2}{L^2}\right)\right) + c$$

parabola $\overline{AB} \rightarrow e_{0.0} = 0$

$$e_{0.1} = -\ 2.70\ \left(1 - \frac{0.3^2}{0.4^2}\right) + 0 = -\ 1.18 \text{ ft}$$

$$e_{0.2} = -\ 2.70\ \left(1 - \frac{0.2^2}{0.4^2}\right) + 0 = -\ 2.03 \text{ ft}$$

$$e_{0.3} = -\ 2.70\ \left(1 - \frac{0.1^2}{0.4^2}\right) + 0 = -\ 2.53 \text{ ft}$$

$$e_{0.4} = -\ 2.70$$

parabola $\overline{BC} \rightarrow \left(1 - \frac{0.1^2}{0.5^2}\right) + 0.5 = -\ 3.54 + 0 = -\ 2.56 \text{ ft}$

$$e_{0.6} = -\ 3.54\ \left(1 - \frac{0.2^2}{0.5^2}\right) + 0.84 = -\ 2.13 \text{ ft}$$

$$e_{0.7} = -\ 3.54\left(1 - \frac{0.3^2}{0.5^2}\right) + 0.84 = -\ 1.43 \text{ ft}$$

$$e_{0.8} = -\ 3.54\left(1 - \frac{0.4^2}{0.5^2}\right) + 0.84 = -\ 0.43 \text{ ft}$$

$$e_{0.9} = 0.84 \text{ ft}$$

$$e_{1.0} = 0.84 + 0.71 + 0.46 = 2.01 \text{ ft}$$

*By symmetry eccentricities in Span 2 are a mirror image those in Span 1.

Determine Moment Coefficient (M.C.)

Location	e	F.C.i	Aset	F.C.$_f$ (0.099) 20/202.5 L.T. Loss	M_p	M_s	M.C.	F.C.$_i$ / F.C.$_f$
0.0L	0	1.000	0.937	0.838	0	0	0	1.19
0.1L	−1.18	0.996	0.941	0.842	−0.994	0.116	−0.878	1.18
0.2L	−2.03	0.992	0.945	0.846	−1.717	0.232	−1.485	1.17
0.3L	−2.53	0.987	0.949	0.850	−2.151	0.347	−1.804	1.16
0.4L	−2.70	0.983	0.952	0.853	−2.303	0.463	−1.840	1.15
0.5L	−2.56	0.980	0.956	0.857	−2.194	0.579	−1.615	1.14
0.6L	−2.13	0.976	0.960	0.861	−1.834	0.695	−1.139	1.12
0.7L	−1.43	0.973	0.964	0.865	−1.237	0.811	−0.426	1.12
0.8L	−0.43	0.969	0.967	0.868	−0.373	0.926	0.553	1.11
0.9L	0.84	0.966	0.966	0.867	0.728	1.042	1.770	1.11
1.0L	2.01	0.950	–	0.851	1.711	1.159	2.870	1.12
0.0L	2.01	0.950	–	0.851	1.711	1.128	2.839	1.12
0.1L	0.54	0.932	–	0.833	0.700	1.015	1.715	1.12
0.2L	−0.43	0.928	–	0.829	−0.356	0.902	0.546	1.12
0.3L	−1.43	0.925	–	0.826	−1.181	0.790	−0.391	1.12
0.4L	−2.13	0.921	–	0.822	−1.751	0.677	−1.074	1.12
0.5L	−2.56	0.913	–	0.819	−2.097	0.564	−1.533	1.12
0.66	−2.70	0.914	–	0.815	−2.201	0.451	−1.750	1.12
0.7L	−2.53	0.910	–	0.811	−2.052	0.338	−1.714	1.12
0.8L	−2.03	0.906	–	0.807	−1.638	0.226	−1.378	1.12
0.9L	−1.18	0.902	–	0.803	−0.948	0.113	−0.835	1.12
1.0L	0	0.895	–	0.799	0	0	0	1.12

Table 3-7

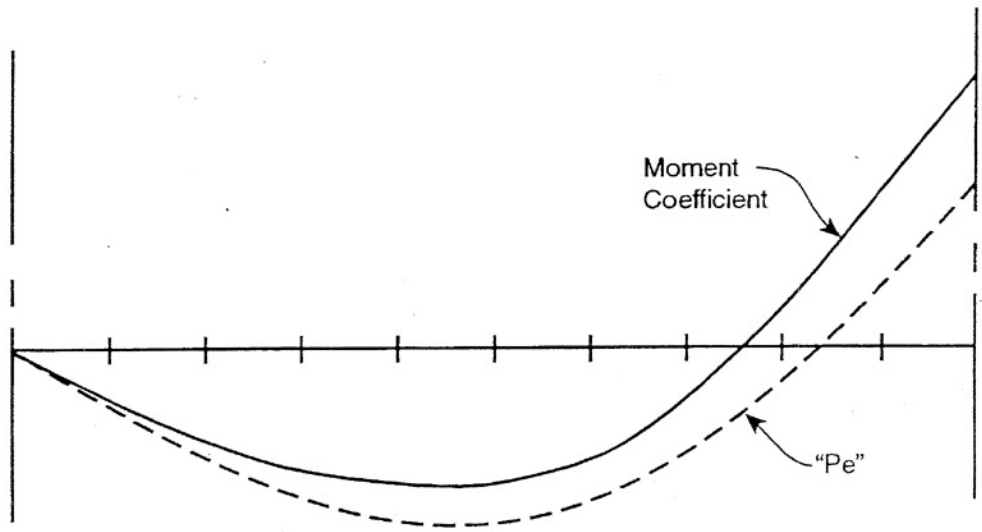

Figure 3-14

3.4.8 Prestress Force

Check for control point at places of maximum eccentricity, 0.4 Span 1, 0.6 Span 2, and at Bent.

$$\text{Equations: } DL_{\text{Trials } 0.1} \rightarrow \left(-M_{\text{Trials}}\, 0.1 * \frac{C}{I}\right) + \frac{P_j(F.C.)}{A} + \frac{P_j(M.C.)c}{I} = 0$$

$$\therefore P_j = \frac{M_{TO,TI}\left(\frac{C}{I}\right)}{\frac{(F.C.)}{A} + \frac{(M.C.)c}{I}}$$

$$SL_{\text{Trials } 0,1,\text{LL}\#1} \rightarrow \left(M_{\text{Trials } 0,1,\text{LL},\#1} * \frac{C}{I}\right) + \frac{P_j(F.C.)}{A} + \frac{P_j(M.C.)c}{I}\, 6\sqrt{f'_c} = 0$$

$$\therefore P_j = \frac{M_{TO,TI,LL\#1}\left(\frac{C}{I}\right) - 6\sqrt{f'_c}}{\frac{(F.C.)}{A} + \frac{(M.C.)c}{I}}$$

0.4 Point Span 1:

$$DL_{\text{Trial } 0,1} \rightarrow \quad P_j = \frac{M_{(0,1)}\left(\frac{C}{I}\right)}{\frac{(F.C.)}{A} + \frac{(M.C.)c}{I}}$$

$$P_j = \frac{(17931 + 3668)\frac{3.70}{400.3}}{\frac{0.853}{63.48} + \frac{(1.840)\ 3.70}{400.3}}$$

$$P_j = 6558 \text{ kips}$$

Where:

C	$= 3.70$ ft
I	$= 400.3$ ft^3
F.C.	$= 0.853$
A	$= 63.48$ ft^2
M.C.	$= 1.840$
M_{Trial_0}	$= 17931$ k · ft
M_{Trial_1}	$= 3668$ k · ft
$M_{Trial_{\#1}}$	$= 6147$ k · ft
$6\sqrt{4000}$	$= 379 \text{ psi} \left(\frac{144}{1000}\right)$
	$= 54.6$ ksf

$$SL_{\text{Trial } 0,1,\text{ LL}}\#1 \rightarrow P_j = P_j = \frac{M_{(0,1,LL\#1)}\left(\frac{C}{I}\right) - 6\sqrt{f'_c}}{\frac{(F.C.)}{A} + \frac{(M.C.)c}{I}}$$

$$\frac{(17931 + 3668 + 6348)\frac{3.70}{400.3} - 54.6}{\frac{0.853}{63.48} + \frac{(1.840)\ 3.70}{400.3}}$$

$$P_j = 6692 \text{ kips}$$

1.0 Point Span 1: Face of Bent:

$$DL_{\text{Trial } 0,1} \quad \rightarrow P_j = \frac{(28443 + 6004)\frac{3.26}{487.1}}{\frac{0.851}{75.42} + \frac{(2.870)\ 3.26}{487.1}}$$

$$P_j = 7561 \text{ kips}$$

$$SL_{\text{Trial 0,1,LL\#1}} \rightarrow P_j = \frac{(28443+6004+7842)\dfrac{3.26}{487.1} - 54.6}{\dfrac{0.851}{75.42} + \dfrac{(2.870)\ 3.26}{487.1}}$$

$$P_j = 7491 \text{ kips}$$

Where:

C	$= 6.5$ ft - 3.24 ft $= 3.26$ ft
I	$= 487.1\ ft^4$
F.C.	$= 0.851$
A	$= 75.42\ ft^2$
M.C.	$= 2.870$
M_{Trial_0}	$= 28443\ k \cdot ft$
M_{Trial_1}	$= 6004\ k \cdot ft$
$M_{Trial_{\#1}}$	$= 7842\ k \cdot ft$
$6\sqrt{4000}$	$= 379\ psi \left(\frac{144}{1000}\right)$
	$= 54.6$ ksf

Moments taken from BDS Output Section 3.4.13

0.6 Point Span 2:

$$DL_{\text{Trial 0,1}} \rightarrow P_j = \frac{(13937+2942)\dfrac{3.70}{400.3}}{\dfrac{0.815}{63.48} + \dfrac{(1.750)\ (3.70)}{400.3}}$$

$$P_j = 5377 \text{ kips}$$

$$SL_{\text{Trial 0,1,LL\#1}} \rightarrow P_j = \frac{(13937+2942+5721)\dfrac{3.70}{400.3} - 54.6}{\dfrac{0.815}{63.48} + \dfrac{(1.750)\ (3.70)}{400.3}}$$

$$P_j = 5318 \text{ kips}$$

Where: $C = 3.70$ ft

$I = 400.3$ ft^2

$F.C. = 0.815$

$A = 63.48$ ft^2

$M.C. = 1.750$

$M_{Trial_0} = 13937$ k·ft

$M_{Trial_1} = 2942$ k·ft

$M_{Trial\#1} = 5721$ k·ft

$6\sqrt{4000} = 379 \text{ psi} \left(\frac{144}{1000}\right)$

$= 54.6$ ksf

$\therefore P_j = 7613$ pound up to nearest 10 kips = **7570 kips**

Controlling condition: DL + ADL, left face of bent.

3.4.9 Stresses

Top Fiber Stresses

Location	Dead Load Stress	Service Load Stress	(1000/14.4) P_j (F.C.) /A	(1000/14.4) P_j (M.C.)$^{C}/_{I}$	Final P/S Stress	Initial P/S Stress	Total Initial Stress	Total Final Stress
0.0L	0	0	694	0	694	828	828	694
0.1L	400	600	697	–304	393	465	865	1015
0.2L	678	1051	701	–546	155	182	860	1206
0.3L	835	1291	704	–663	41	48	883	1332
0.4L	871	1347	707	–667	30	35	906	1377
0.5L	785	1228	710	–594	116	133	918	1344
0.6L	578	934	713	–419	294	333	911	1228
0.7L	250	471	716	–157	559	629	879	1030
0.8L	–200	–356	719	203	922	1029	829	566
0.9L	–771	–1166	718	651	1369	1525	754	203
1.0L	–1324	–1968	593	1010	1603	1790	466	–365
0.0L	–1294	–1901	593	1005	1598	1783	489	–303
0.1L	–818	–1209	690	631	1321	1479	661	112
0.2L	–311	–492	687	201	888	994	683	396
0.3L	92	280	684	–144	540	605	697	820
0.4L	391	701	681	–395	286	320	711	987
0.5L	586	975	678	–564	114	125	714	1089
0.6L	677	1098	675	–643	32	36	713	1130
0.7L	664	1067	672	–630	42	47	711	1109
0.86	546	877	668	–507	161	181	727	1038
0.9L	325	523	665	–307	358	402	727	881
1.0L	0	0	662	0	662	744	744	662

Stress values reported in Psi

$P_j = 7570$

$A = 63.48\ FY^2$ (Mid) $I = 400.3\ Ft^4$ (Mid) $C = 6.50' - 3.70' = 2.80$ Ft (Mid)

$A = 75.42\ FY^2$ (Bent) $I = 487.1\ Ft^4$(Bent) $C = 6.50' - 3.24' = 3.26$ Ft (Bent)

Table 3-8

STRESSES (PSI) FOR TOP FIBER

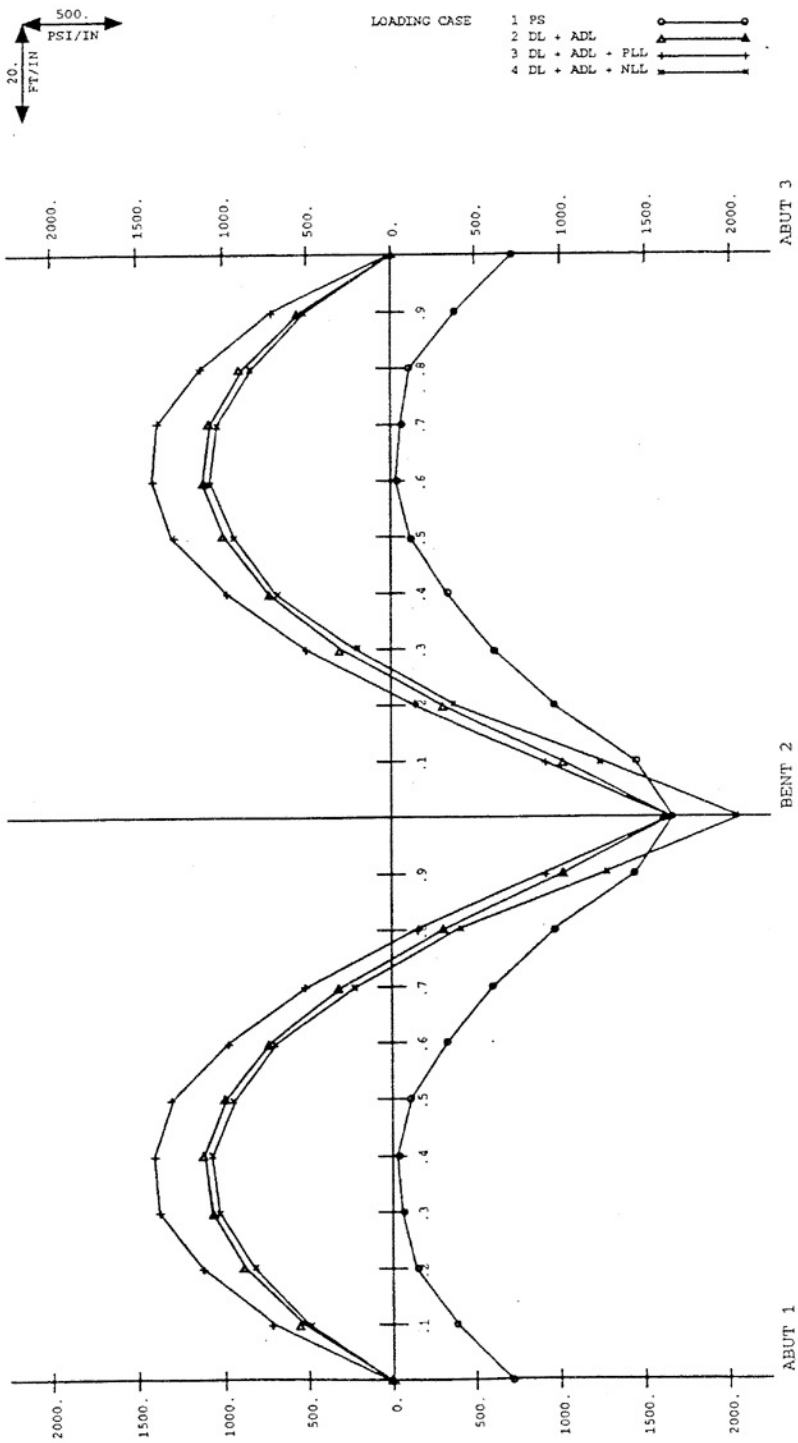

Figure 3-15

Bottom Fiber Stresses

Location	Dead Load Stress	Service Load Stress	(1000/14.4) P_j (F.C.) /A	(1000/14.4) P_j (M.C.)$^{C}/_{I}$	Final P/S Stress	Initial P/S Stress	Total Initial Stress	Total Final Stress
0.0L	0	0	694	0	694	828	828	694
0.1L	–528	–822	697	402	1099	1300	772	277
0.26	–897	–1389	701	722	1423	1669	772	34
0.3L	–1104	–1706	704	877	1581	1836	732	–105
0.4L	–1151	–1781	707	894	1601	1844	693	–180
0.5L	–1038	–1623	710	795	1495	1710	672	–128
0.6L	–764	–1235	713	553	1266	1436	672	31
0.7L	–330	–623	716	207	923	1038	708	300
0.8L	265	471	719	–269	450	502	767	921
0.9L	1020	1541	718	–860	–142	–158	862	1349
1.0L	1312	1951	593	–1395	–802	–895	417	1149
0.0L	1283	1835	593	–1379	–786	–877	406	1099
0.1L	1091	5	690	–833	–143	160	921	1455
0.26	411	351	687	–265	422	472	383	1073
0.36	–122	–370	684	190	374	972	350	504
0.4L	–51	–927	681	522	1203	1342	830	276
0.56	– 5	–1237	678	745	1423	11595	820	134
0.66	–875	–1451	675	850	1525	1710	815	74
0.7L	–877	–1411	672	833	1505	1689	812	114
0.8L	–723	–1160	668	670	1338	1503	780	178
0.9L	–430	–692	665	406	1071	1203	773	379
1.0L	0	0	662	0	662	744	744	662

Stress values reported in Psi
Pj = 7570
A = 63.48 FY^2 (Mid) I = 400.3 Ft^4 (Mid) C= 3.70 Ft (Mid)
A = 75.42 FY^2 (Bent) I = 457.1 Ft^4(Bent) C= 3.24 Ft (Bent)

Table 3-9

STRESSES (PSI) FOR BOTTOM FIBER

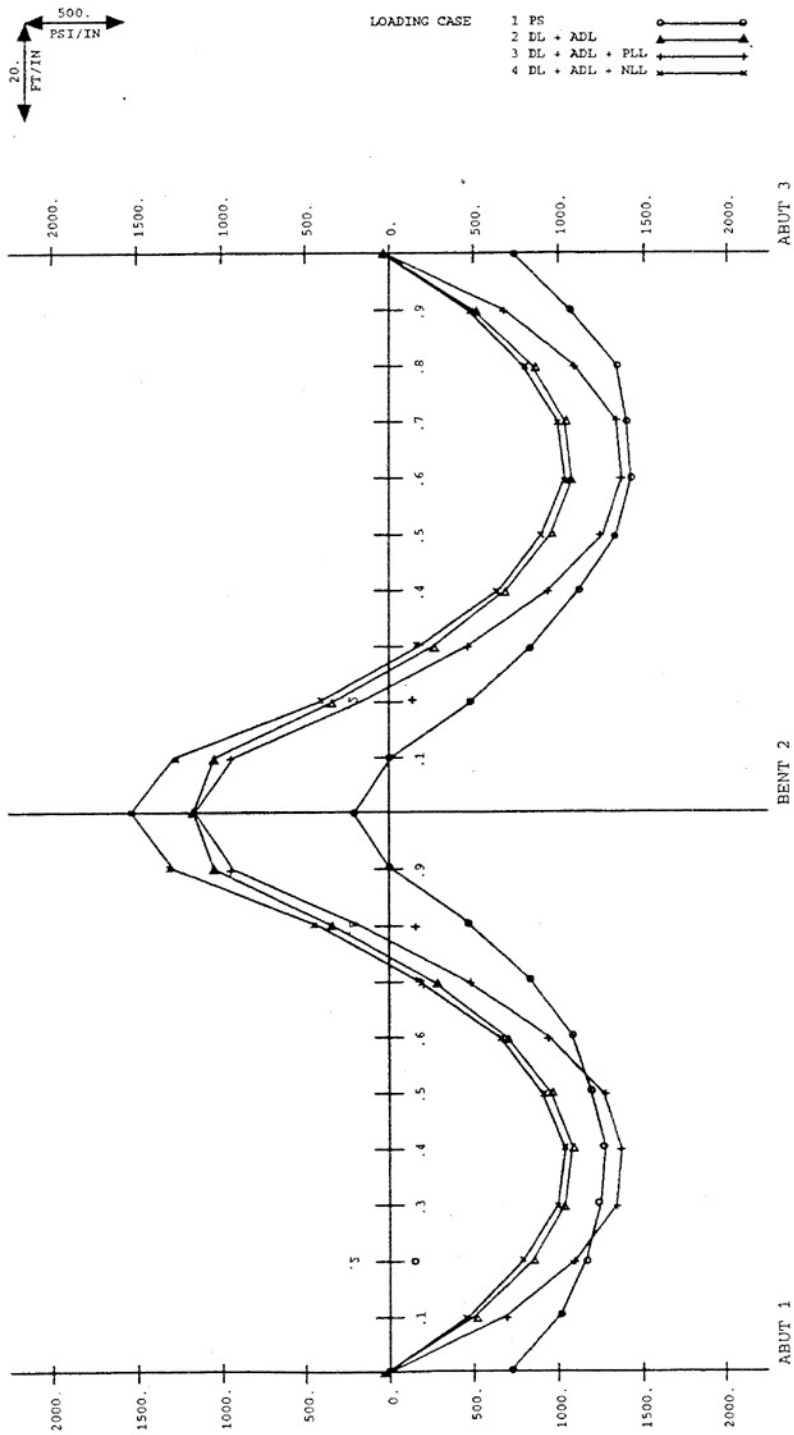

Figure 3-16

3.4.10 Concrete Strength Required

1. f'_{ci} → (choose 3500 psi unless calcs show greater strength required:

$$f'_{ci} = \frac{f_{DL} + fP/_{si}}{0.55} = \frac{921 \text{ psi}}{0.55} = 3638 \text{ psi} < 4000$$

$\therefore$ **f'_{ci} = 3500 psi**

2. f'_c → choose 4000 psi unless calcs show greater strength required:

$$f'_c = \frac{f_{DL} + ADL + LL\#1 + fP/_{si}}{0.40} = \frac{1455 \text{ psi}}{0.40} = 3638 \text{ psi} < 4000$$

$\therefore$ **f'_c = 4000 psi**

3.4.11 Ultimate Moment

Prestressed members are designed at service load level. At ultimate conditions, the member is subject to loads in excess of the Design Loads. Therefore, the ultimate flexural strength of the member must be checked at critical sections. These critical sections include points of maximum positive and negative moment and changes in cross-sections.

If the ultimate applied moment is less then the capacity of the section, no additional mild reinforcement is needed. If, however, the ultimate applied moment is greater then the capacity of the section, additional mild reinforcement may be added.

For example:

If $M_u \leq \phi M_n$, then, no additional mild reinforcement is needed

If $M_u > \phi M_n$, then, additional mild reinforcement is needed.

3.4.11.1 Ultimate Applied Moment, M_u

A. STEP 1:

The ultimate applied moment at any section can be calculated by the greater of the two equations.

$$M_u = 1.3(M_d + 1.67M_{LL\#1}) + M_s$$

or

$$M_u = 1.3(M_d + M_{LL\#4}) + M_s$$

Take note, the member is at the level of incipient failure, therefore, the beam is fully loaded, where,

M_d = maximum dead load moment due to Trail) + Trial 1

$M_{LL\#1}$ = maximum live load moment due to LL#1 (HS20)

MLL#1 = maximum live load moment due to LL#4 (P13)

MS = secondary moment where MX = (MCs)PJ

3.4.11.2 Capacity, ϕM_n (without mild reinforcement)

A. STEP 2:

First calculate the capacity of the section with no additional mild reinforcement to determine if mild reinforcement is needed if $M_u > \phi M_n$, then calculate the area of mild reinforcement required.

Three basic assumptions are made in calculating the capacity of the section:

1. no additional mild reinforcement at this time
2. section is rectangular section ($a < h_f$)
3. section is under– reinforced ($\omega \leq 0.30$)

At ultimate conditions, prestressed concrete acts similar to reinforced concrete, therefore, many of the principles of reinforced concrete are utilized in calculating the ultimate capacity of the section. The parabolic stress shape may be assumed to be an equivalent rectangular stress block with an average compressive stress equal to $0.85f'_c$ over a compression block depth a.

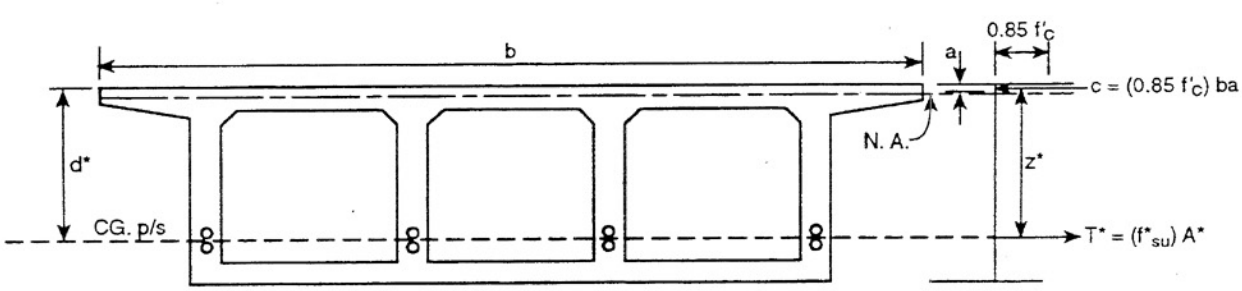

Figure 3-17

The compressive force equals the average stress, ($0.85f'_c$), times the area on which it acts, (ba). And, the tensile force equals the stress in the prestressing steel at ultimate conditions, (f^*_{su}), times the area of prestressing steel, (A*). Equilibrium must be maintained, therefore:

C=T*

By substitution,

$$(.85\, f'_c)\, b_a = (f^*_{su})\, A^*, \text{ where } f^*_{su} = f'_s\left[1 - 0.5\frac{\rho^*\, f'_s}{f'_c}\right] \qquad \text{Spec. 9.17.4.1}$$

$$\therefore \quad a = \frac{(f^*_{su})A^*}{(.85\, f'_c)b} \qquad \text{(Equation 1)}$$

Summing moments about the compressive force yields:

$M_n = (T^*)(z^*)$, where

$z^* = \text{moment arm}\left(d^* - \frac{a}{z}\right)$

d^* = distance from outermost compression fiber to the center of gravity of prestressing steel

By substitution and multiplying both sides of the equation by ϕ,

$$\phi\, M_n = \phi\left[(f^*_{su})A^*\left(d^* - \frac{a}{z}\right)\right] \qquad \text{(Equation 2)}$$

Substiuting Equation 1 into Equation 2 yields:

$$\phi\, M_n = \phi\left[(f^*_{su})A^*\left(d^* - \frac{(f^*_{su})A^*}{2(.85\, f'_c)b}\right)\right]$$

So now, algebraically manipulate equation to look like equation in specifications.

$$\phi\, M_n = \phi\left[(f^*_{su})A^*d^*\left(1 - 0.60\frac{(f^*_{su})A^*}{(f'_c)\, d^*b}\right)\right] \qquad \text{Spec. 9.17.2}$$

$$\phi\, M_n = \phi\left[(f^*_{su})A^*d^*\left(1 - 0.60\, \rho^*\frac{f^*_{su}}{f'_c}\right)\right] \qquad \text{(Equation 3)}$$

Note:

1. Check assumptions

   a. $a \le h_f$ b. $\omega \le 0.30$

2. If $M_u \le \phi M_n$ If $M_u > \phi M_n$

   Then, must calculate area of mild reinforcement required

3.4.11.3 Capacity, ϕM_n (With Mild Reinforcement)

A. STEP 3:

If $M_u > \phi M_n$, add additional mild reinforcement to increase the resisting moment.

Three basic assumptions are made in calculating the capacity of the section:

1. No additional mild reinforcement at this time
2. Section is rectangular section ($a \leq h_f$)
3. Section is under– reinforced ($\omega \leq 0.30$)

The mild reinforcement produces an additional tensile force equal to the stress in the steel, $f_s = f_y$, times the area of steel, A_s.

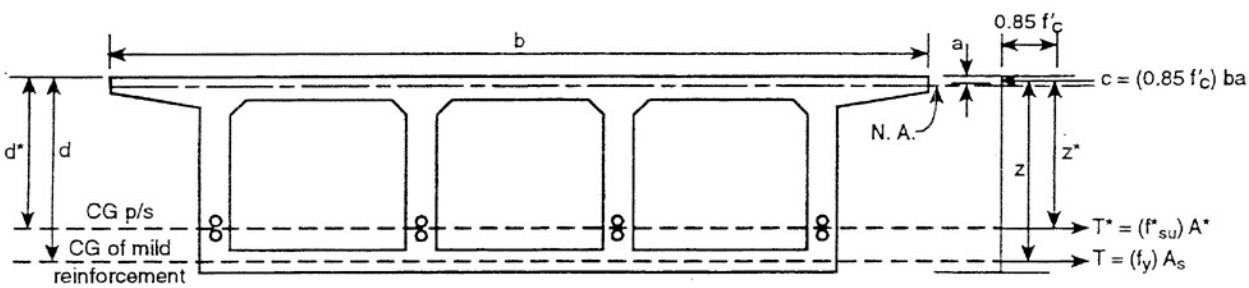

Figure 3-18

Again, equilibrium must be maintained, therefore:

$$C = T^* + T$$

By substitution,

$$(0.85\, f'_c)\, b\, a = (f^*_{su})\, A^* + (f_y)\, A_s, \qquad \text{where } f^*_{su} = f'_s\left[1 - 0.5\frac{\rho^*\, f'_s}{f'_c}\right]$$

$$\therefore\ a = \frac{(f^*_{su})A^* + (f_y)A_s}{(.85\, f'_c)b}$$

summing moments about the compressive force yields:

$\phi M_n = (T^*)(z^*) + (T)(z)$, where:

$$z^* = \text{moment arm}\left(d^* - \frac{a}{z}\right)$$

d^* = distance from outermost compression fiber to the center of gravity of prestressing steel

$z =$ moment arm $\left(d - \frac{a}{z}\right)$

$d =$ distance from outermost compression fiber to the center of gravity of mild reinforcement

By substitution and multiplying both sides of the equation by ϕ,

$$\phi M_n = \phi\left[\left(f^*_{su}\right)A^*\left(d^*\frac{a}{z}\right) + \left(f_y\right)A_s\left(d - \frac{a}{z}\right)\right]$$

Now, set $M_u = \phi M_n$

$$\phi M_n = \phi\left[\left(f^*_{su}\right)A^*\left(d^*\frac{a}{z}\right) + \left(f_y\right)A_s\left(d - \frac{a}{z}\right)\right] \qquad \text{(Equation 5)}$$

Having two equations and two unknowns, the area of mild reinforcement can be determined by first substituting Equation 4 into Equation 5. Then, solve the quadratic equation for A_s.

Note:

1. Check assumptions

   a. $a \leq h_f$

   b. $\omega \leq 0.30$

3.4.11.4 0.4 Point

This procedure will be demonstrated on the 0.4L, point.

STEP 1: Calculate M_u

$M_u = 1.3(M_{d+} 1.67M_{LL\#l}) + M_S$

$= 1.3[17{,}931 + 3{,}668 + (1.67)(6{,}147)] + (0.463)(7{,}570)$

$\mathbf{M_u = 44{,}929\ k{\cdot}ft}$

$M_u = 1.3(M_d + M_{LL\#4}) = M_s$

$= 1.3[17{,}931 + 3.668 + 17{,}414] + (0.463)(7{,}570)$

$\mathbf{M_u = 54{,}222\ k{\cdot}ft}$ ← CONTROLS

STEP 2: Calculate ϕM_n (without mild reinforcement)

Equation 1:

$$a = \frac{(f^*_{su})A^*}{(.85\ f'_c)b}, \text{ where}$$

$A^* = P_j / [0.75\ f'_s] = 7{,}570 / [(0.75)(270)] = 37.38\ in^2$

$\rho^* = A^* / [bd^*] = 37.38 / [(37.5 \times 12)\ (5.5 \times 12)] = 0.00126$

$$f^*_{su} = f'_s \left[1 - 0.5 \frac{\rho^* f'_s}{f'_c}\right]$$

$= 270\ [1 - (0.5)(0.00126)(270/4)] = 258.5$ ksi

$$= \frac{(258.5)(37.38)}{.85(4)(37.5 \times 12)}$$

$a = 6.32\ in \leq (h_f = 8.25\ in)$

Equation 3:

$$\phi M_n = \phi \left[(f^*_{su})A^* d^* \left(1 - 0.60\ \rho^* \frac{f^*_{su}}{f'_c}\right)\right]$$

$= 0.95\ \{(258.5)(37.38)(5.5)[1 - (0.60)(0.00126)(^{258.5}/_4)]\}$

$\phi M_n = 48.021$ k•ft

$M_u > \phi M_n$ (54,222 > 48,021)

∴ Additional mild reinforcement is needed. So now calculate A_s.

Note:

1. Check assumptions

   a. $a \leq h_f$

      $6.62\ in \leq 8.25\ in$ (O.K.)

   b. $\omega \leq 0.30$

      $$\omega = \rho^* \frac{f^*_{su}}{f'_c}$$

      $= (0.00126)(258.5) / (4)$

      $= 0.08 \leq 0.30$ (O.K.)

STEP 3: Calculate A_s

Equation 4:

$$a = \frac{(f^*_{su})A^* + (f_y)A_s}{(.85\ f'_c)b}$$

$$\therefore \quad \frac{a}{z} = \frac{(37.38)(258.5) + 60A_s}{2(0.85)(4)(37.5 \times 12)}$$

$$\frac{a}{z} = \frac{9662.17 + 60A_s}{2244.0}$$

Equation 5: (set $M_u = \phi M_n$)

$$M_u = \phi\left[(f^*_{su})\ A^*\left(d^* - \frac{a}{z}\right) + (f_y)\ A_s\left(d - \frac{a}{z}\right)\right]$$

Multiply both sides of the equation by 2244.0 and divide by ϕ,

(54,222)(12)=

$$(9.50)\left\{(258.5)(37.38)\left[66 - \left(\frac{9662.734 + 60A_s}{2244}\right)\right] + 60A_s\left[74.81 - \left(\frac{966273 + 60A_s}{2244}\right)\right]\right\}$$

$(54{,}222)(12)(2244)/(0.95) = (258.5)(37.38)\ [(66)(2244) - 9662.73 - 60\ A_s]$

$+ 60\ A_s\ [(74.81)(2244) - 9662.73 - 60\ A_s]$

Algebraically manipulate equation yielding:

$(A_s)^2 - 3{,}494.09\ A_s + 66{,}058.0 = 0$

Solve quadratic equation,

$\mathbf{A_s = 19.0\ in^2}$

Note:

1. Check assumptions

   a. $a \le hf$

      Substitute A_s into equation 4,

      7.06 in $\le$ 8.25 (O.K.)

   b. $w \le 0.30$

      $\omega = \rho^* \frac{254.3}{4} + \rho\frac{60}{4}$, where $\rho = 19/(37.5 \times 12 \times 74.81)$

      $= (0.00126)(258.5)\ /\ (4) + (0.00056)(60)\ /\ (4)$

      $= 0.09 \le 0.30$ (O.K.)

3.4.12 Shear

As in the previous design considerations of this example, only Span 1 will be analyzed. Again we mention that in actual design where there is an absence of symmetry, these illustrated procedures should be applied throughout the structure length.

The distortion of the member from prestressing causes a change in the reactions which in turn will affect the shear values. The various section properties, concrete strength, dead load moments and shears and other live load moments and shears have been calculated. To calculate P_f, = 7570^k for this example.

We will use the method in the *Spec.* for shear design. Since this method involves lengthy calculations, we will demonstrate the procedure only on the 0.9L point.

V_u equals the greater of the two equations. "P" loads will control for this example.

$$V_u = 1.3\,[V_D + 1.67\,V_{LL\#1}]\,V_{MS}$$

or

$$V_u = 1.3[V_{DL} + V_{LL\#4}] + V_{ms} \qquad \text{(Spec. 3.22.1A)}$$

From BDS output:	**Abut 1**	**0.4L**	**0.9L**	**Bent 2**
Dead Load Shears (Trial 0)	585.2^K	– 31.8	– 803.1	– 971.6
Dead Load Shears (Trial 1)	120.6^K	7.3	– 167.2	– 199.2
Live Load #1 and Impact Shears:	214.7^K	92.8,– 102.8	– 250.0	– 285.1
Live Load #4 Impact shears	594.3^k	192.1,– 188.1	– 695.4	– 780.8

Shears induced by M_s:

These shears are equal to reactions at supports to resist M_s.

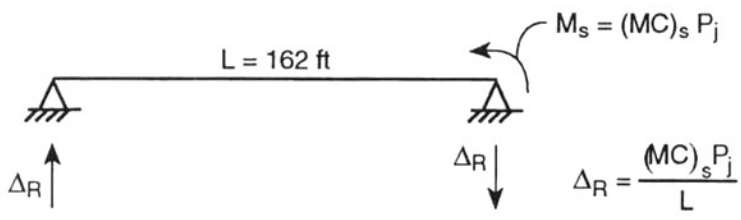

$$\Delta_R = \frac{(MC)_s P_j}{L} = \frac{(1.159)(7570^K)}{(162\text{ ft})}$$

$$\Delta_R = 54.2^K$$

Note: $V_{MS} = \Delta_R$

$\therefore V_{MS} = 54.2^K$

Summary of factored shears, Span1:

	Abut 1	0.4L		0.9L	Bent 2
$V_{U,DL} = 1.3V_{DL}$	917.5	– 50.0	– 50.8	– 1261.4	– 1522.0
$V_{U,LL+I}=1.3V_{LL+I}$	772.6	249.7	– 244S	– 904.0	– 1015.0
V_{ms}	54.2^K	54.2	54.2	54.2	54.2
Total V_u:	1744^k	253^k		– 2111	$– 2483^k$

Note: Skewed bridges require modification of design shears. Consult *Memo to Designers 15– 1.*

Resisting shears:

Members subject to shear shall be designed such that:

$V_u \leq \phi\ (V_c+V_s)$ where $\phi = 0.90$ (Spec. 9.20.1.3, eq. 9– 26)

Shear resistence of concrete, V_c: (Spec. 9.20.2)

The shear resistence of concrete, V_c, is taken as the lesser of the values

V_{ci} and V_{cw} but not less then V_{cijmin}, (Spec. 9.20.2.1& 9.20.2.2)

where $V_{cijmin} = 1.7\left(\sqrt{f'_c}\right)b'\,d$

@ 0.9L:

V_d = Due to unfactored self weight shear (trial 0)

$=803.1^k$

V_{ci}: (Spec. 9.20.2.1)

$$V_{ci} = 0.6\sqrt{f'_c}\,b'\,d + Vd + Vi\left(\frac{M_{cr}}{M_{Max}}\right)$$ (Spec. 9.20.2.2, eq. 9– 27)

$V_{ci} \geq 1.7\sqrt{f'_c}\,b'\,d$

b' =width of web = $4 \times 1ft = 4$ ft

d = effective depth to prestressing steel or 0.8H, whichever is greater

V_1 = associated factored shear to M_{max}

$=1.3\ (167.2 + 537.6) = 916.2^K$

M_{max} =maximum factored moment due to externally applied loads.

$=1.3(3403 + 8832) = 15{,}905\ k\cdot ft$

$$M_{cr} = \left(\frac{I}{Y_t}\right)\left(6\sqrt{f'_c} + f_{pe} - f_d\right)$$ (Br. Des. Spec. 9.20.2.2, eq. 9–28)

$I = 400.3$

Y_t = distance from NA to extreme tension fiber. = 6.50'– 3.70'– 2.80 ft

f_{pe} = compressive stress in concrete due to effective prestresses at extreme fiber where tensile stresses are produced by externally applied loads

= 1369 psi

f_d = stress due to unfactored self wt. at extreme fiber where tensile stresses are produced by externally applied loads.

= 771 Psi

$$\therefore M_{cr} = \frac{400.3}{2.80}\left[6\sqrt{4000}\left(\frac{144}{1000}\right) + 1369 - 771\right]\left(\frac{144}{1000}\right)$$

$$= 20{,}123\ k\bullet ft$$

so,

$$V_{ci} = 0.6\sqrt{4000}\left(\frac{144}{1000}\right)(4)(5.20) + 8031 + 916.2\left(\frac{20{,}123}{15{,}905}\right) = 2076^k$$

check minimum value of V_{ci}: (Spec. 9.20.2.2)

$$V_{ci,min} = 1.7\sqrt{4000}\left(\frac{144}{1000}\right)(4)(5.20) = 322^k \quad \rightarrow \quad \text{does not control}$$

V_{cw}

$$V_{cw} = \left(3.5\sqrt{f'_c} + 0.3f_{pc}\right)b'd + V_p$$ (Spec. 9.20.2.3, eq 9-29)

$d = 5.2$ ft

$b' = 4.0$ ft

f_{pc} = compressive stress in concrete at N.A. Due to effective prestress

$$= \frac{0.867(7570)}{63.48} = 103.39\ k\cdot ft^2$$ (Spec. 9.20.3.1)

V_P = vertical component of cable force (Spec. 9.2.1)

$V_P = (F.C.)\, P_j \phi$

ϕ = angle change from horizontal axis to prestressing cable ∴ for 0.9 point

$\phi = \alpha_{BC} = \alpha_{CD} = 0.0874$ radians

$V_P = (0.867)(7570)(0.0874) = 574^k$

$$\text{so, } V_{cw} = \left[3.5\sqrt{4000}\left(\frac{144}{1000}\right) + 0.3(103.39)\right](4)(5.2) + 574$$

$$= 1882k$$

since $1882 < 2076$, $V_c = 1882^k$

Assume # 5 stirrups in each of the four girder webs.

$$\text{so total } A_v = (4 \text{ girders})(2 \text{ legs/girder})\left(\frac{0.31 \text{ in}^2}{\text{leg}}\right)$$

$$= 2.48 \text{ in}^2$$

$$V_u = \leq \phi\,(V_c + V_s), \text{ where } V_{s,prov.} = \frac{A_v f_y d}{s}$$

$$\text{so,} \quad s_{req'd} = \frac{A_v f_y d}{\left(\frac{V_u}{\phi} - V_c\right)}$$

$$= \frac{2.48(60)(5.2)(12)}{\left(\frac{2111}{0.9} - 1882\right)} = 20 \text{ in.}$$

(Spec. 9.20.3.1, eq. 9-30)

Checking minimum steel, minimum web width, and maximum spacing:

Min. steel:

$$A_v\,(\min) = \frac{50b's}{f_y} = \frac{50(48)(20)}{60000} = 0.80 \text{ in}^2$$ (Spec. 9.20.3.3, eq 9-31)

$0.80 < 2.48$, O.K.

Min. web width:

$$V_s = \frac{A_v f_y d}{s} \le 8\sqrt{f'_c}\, b' d \qquad \text{(Spec. 9.20.3.1)}$$

$$\therefore b'_{min} \ge = \frac{A_v f_y d}{8\sqrt{f'_c}\, s} = \frac{2.48(60000)}{8\sqrt{4000}(20)} 14.7 \text{ in since } 14.7 \text{ in} \le 48 \text{ in, ok web width}$$

Max. spacing:

$$V_s = \frac{2.48(60000)[5.2(12)]}{20(1000)} = 464.3k \qquad \text{(Spec. 9.20.3.2)}$$

$$\frac{4\sqrt{4000}}{1000}(48)[5.2(12)] = 758k$$

since 4.64 < 758

s_{max} = minimum of: 0.75 (6.5(12)) = 58.5 in. or 24 in.

s = 20 in. < 24 in., O.K.

For the rest of the span, the spacings are:

Location	s
Abut 1	24 in.
0.4L	24 in.
0.9L	20 in.
Bent 2	6 in.

The spacing shown are correct and comply with the *Spec.* requirements. However, it has been shown that in practical situations, it is prudent to limit the stirrup spacing to an 18 in. maximum and to 12 in. maximum within about 8 feet of the supports.

3.4.13 BDS Computer Output

The following pages are selected parts of the BDS Version 3.0 computer output for the example problem. The reader is encouraged to compare these results to the hand calculations. BDS calculates moments and stresses every $^1/_{40}$th point on the span and provides output at the $^1/_{10}$th point. These extensive calculations might not match exactly with the hand calculations.

```
************************************
YOUR BDS1 FILENAME IS: MANUAL
************************************
          1 1 2R H1620        0   0            0150     0    0    0    0 0   0S                100
          2 2 3 RH1500        0   0            0150     0    0    0    0 0   0                 100
          3 4 2    280        0  40            0150     0    0    0    0 0   0                 100
          0    1 0   0   0 375 650 812 638 212012       0012   0 40 712 40 712     10         200
          0    2 0   0   0 375 650 8121200 212012       0012   0 40 712 40 712     20         200
          1    010   0   0   0   0   0   0 0 00 0      00 0   0  0 0 0  0 0 0      0          200
          1148010    0   0    0    0    0    0 0 00 0   00 0   0   0 0 0   0 0 0        0    200
          1160020    0   0    0    0    0    0 0 00 0   00 0   0   0 0 0   0 0 0        0    200
          1162020    0   0    0    0    0    0 0 00 0   00 0   0   0 0 0   0 0 0        0    200
          2   020    0   0    0    0    0    0 0 00 0   00 0   0   0 0 0   0 0 0        0    200
          2  2020    0   0    0    0    0    0 0 00 0   00 0   0   0 0 0   0 0 0        0    200
          2 14010    0   0    0    0    0    0 0 00 0   00 0   0   0 0 0   0 0 0        0    200
          2150010    0   0    0    0    0    0 0 00 0   00 0   0   0 0 0   0 0 0        0    200
          0   3 0+26       0     0     0     0 2600    9200         30                        201
          3   030  0       0     0     0     0    0       0          0                        201
          3 28030  0       0     0     0     0    0       0          0                        201
          1 1    784U      01620        0       0 0 TYPE 25 BARRIERS                          300
          1 2    784U      01500        0       0 0 TYPE 25 BARRIERS                          300
          1 1   1190U      01620        0       0 0 3-INCH A.C. OVERLAY                       300
          1 2   1190U      01500        0       0 0 3-INCH A.C. OVERLAY                       300
          1 2680 2680     0   0     0    000                                                  400
          2 2680 2680     0   0     0    000                                                  400
          1 2680 2680     0   0 0                                                             500
          2 2680 2680     0   0 0                                                             500
          11   1 04010 280 550 125   0   0 0  0  0 0L    1 0                0 0     0          600
11   21060 0 125 550 280   0   0 0  0  0 0       0    0 0   0     600
```

ACCOUNT: CALTRANS BDS-VERSION 3.00 REL-10 05/10/92, FEB. 02, 1993 PAGE 2

D I V I S I O N O F S T R U C T U R E S – C A L T R A N S

FRAME DESCRIPTION

END MEM CALL NO	JT. LT	JT. RT	COND LT	COND RT	DIR	SPAN	I	SUPPORT OR HINGE	E	DEAD LOAD UNI	DEAD LOAD SEC	K LT	K RT	CARRY OVER FACTORS LT	CARRY OVER FACTORS RT	RE-MEM
/-/	/-/	/-/	/-/	/-/	/—/	/——/	/—/	/——/	/——/	/——/	/—/					
1	1	2	R		H	162.0	0.00	0.0.	3600	0.000	.150	0.00	0.00	0.00	0.00	0
2	2	3	R		H	150.0	0.00	0.0	3600	0.00	.150	0.00	0.00	0.00	0.00	0
3	4	2				28.0	0.00	4.0	3250	0.00	.150	0.00	0.00	0.00	0.00	0

ACCOUNT: CALTRANS BDS-VERSION 3.00 REL-10 05/10/92, FEB. 02, 1993 PAGE 5

D I V I S I O N O F S T R U C T U R E S – C A L T R A N S

NO ERRORS FOUND

FRAME PROPERTIES

MEM NO	JT LT	JT RT	END COND LT	END COND RT	DIR	SPAN	MIN E*I	SUPPORT OR HINGE	E	CARRY OVER FACTORS LT	CARRY OVER FACTORS RT	DISTRIBUTION FACTORS LT	DISTRIBUTION FACTORS RT
/-/	/——/	/—/	/-/	/—/	/——/	/——/	/——/	/——/					
1	1	2	R		H	162.0	0.1441E+07	0.0	3600	0.513	0.000	0.000	0.275
2	2	3		R	H	150.0	0.1441E+07	0.0	3600	0.000	0.513	0.297	0.000
3	4	2				28.0	0.2990E+06	4.0	3250	0.500	0.500	0.000	0.428

***** IF MEMBER IS HORIZONTAL SUPPORT OR HINGE FIELD EQUALS LOCATION OF HINGE FROM LEFT END OF MEMBER ***** ***** IF MEMBER IS VERTICAL SUPPORT OR HINGE FIELD EQUALS SUPPORT WIDTH USED FOR MOMENT REDUCTION *****

```
ACCOUNT:                    CALTRANS BDS-VERSION 3.00  REL-10  05/10/92,    FEB. 02, 1993 PAGE   9

                D I V I S I O N   O F   S T R U C T U R E S  –  C A L T R A N S

*** SIDESWAY INCLUDED. *** HORIZONTAL MEMBER MOMENTS TRIAL 0 MEM
NO   LEFT    1 PT    .2 PT    3 PT    .4 PT    .5 PT    .6 PT    .7 PT    .8 PT    .9 PT    RIGHT

1      0.  8231.  13963.   17197.   17931.   16167.   11903.    5141.   -4120.  -15879.  -30212.
( -28443.) 2 -29500. -16844. -6403. 1896. 8052. 12066. 13937. 13666. 11253. 6698. 0.
(  -27812.)
HORIZONTAL MEMBER STRESSES  TRIAL  0    BOTTOM FIBER
1      0.  -528.    -897.   -1104.   -1151.   -1038.    -764.    -330.     265.   1020.   1312.
2   1283.  1081.     411.    -122.    -517.    -775.    -895.    -877.    -723.   -430.      0.
HORIZONTAL MEMBER STRESSES  TRIAL  0     TOP FIBER
1      0.   400.    678.     835.    871.     785.    578.     250.    -200.    -771.   -1324.
2  -1294.  -818.    -311.     92.    391.     586.    677.     664.     546.     325.       0.
VERTICAL MEMBER MOMENTS  TRIAL  0
3   712.   712.     712.     712.    712.     712.     712.     712.     712.     712.     712.
HORIZONTAL MEMBER SHEARS  TRIAL  0
1   585.2  431.0    276.7    122.5   -31.8   -186.0   -340.3   -494.5   -648.8   -803.1   -971.6
2   924.6  767.5    624.7    481.8    339.0    196.2     53.3   -89.5   -232.3   -375.1   -517.9
VERTICAL MEMBER SHEARS  TRIAL 0
3     0.0     0.0      0.0      0.0      0.0      0.0      0.0     0.0      0.0      0.0      0.0
VERTICAL MEMBER REACTIONS  TRIAL  0

MEM        LT                  RT          MEMBER

NO      REACTION            REACTION       WEIGHT

3 2005.4 1896.2 109.2
```

ACCOUNT: CALTRANS BDS-VERSION 3.00 REL-10 05/10/92, FEB. 02, 1993 PAGE 15

D I V I S I O N O F S T R U C T U R E S – C A L T R A N S

LL NO. 1. **NEGATIVE** LIVE LOAD MOMENT ENVELOPE AND ASSOCIATED SHEARS

MEM NO	LEFT	.1 PT	.2 PT	.3 PT	.4 PT	.5 PT	.6 PT	.7 PT	.8 PT	9 PT	RIGHT
1	0.	-207.	-414.	-620.	-827.	-1034.	-1241.	-1447.	-2269.	-4723.	-8282.
											(-7842.)
SHEAR	0.0	-12.8	-12.8	-12.8	-12.8	-12.8	-12.8	-12.8	-47.4	-189.5	-248.2
2	-7837.	-4675.	-2508.	-1782.	-1528.	-1273.	-1019.	-764.	-509.	-255.	0.
											(-7416.)
SHEAR	238.5	182.0	42.1	17.0	17.0	17.0	17.0	17.0	17.0	17.0	0.0

HORIZONTAL MEMBER STRESSES LL MAX NEG BOTTOM FIBER

1	0.	13.	27.	40.	53.	66.	80.	93.	146.	303.	362.
2	342.	300.	161.	114.	98.	82.	65.	49.	33.	16.	0.

HORIZONTAL MEMBER STRESSES LL MAX NEG TOP FIBER

1	0.	-10.	-20.	-30.	-40.	-50.	-60.	-70.	-110.	-229.	-365.
2	-345.	-227.	-122.	-87.	-74.	-62.	-49.	-37.	-25.	-12 .	0.

ACCOUNT: CALTRANS BDS-VERSION 3.00 REL-10 05/10/92, FEB. 02, 1993 PAGE 17

D I V I S I O N O F S T R U C T U R E S – C A L T R A N S

LL NO. 1. **POSITIVE** LIVE LOAD MOMENT ENVELOPE AND ASSOCIATED SHEARS

MEM NO	LEFT	.1 PT	.2 PT	.3 PT	.4 PT	.5 PT	.6 PT	.7 PT	.8 PT	9 PT	RIGHT
1	0.	2885	4801.	5851.	**6147.**	5828.	4933.	3585.	1991.	557.	0.
SHEAR	0.0	178.1	148.2	102.5	75.1	-112.0	-136.1	-157.4	-175.2	-119.6	0.0
2	0.	520	1901.	3390.	4632.	5443.	**5721.**	5432.	4453.	2673.	0.0
SHEAR	0.0	120.2	175. 0	156.9	135.5	111.2	-75.9	-103.3	-148.4	-178	0.0

HORIZONTAL MEMBER STRESSES LL MAX POS BOTTOM FIBER

1	0.	-185.	-308.	-376.	-395.	-374.	-317.	-230.	-128.	-36.	0.
2	0.	-33.	-122.	-218.	-297.	-349.	-367.	-349.	-286.	-172.	0.

HORIZONTAL MEMBER STRESSES LL MAX POS TOP FIBER

1	0.	140.	233.	284.	299.	283.	240.	174.	97.	27.	0.
2	0.	25.	92.	165.	225.	264.	278.	264.	216.	130.	0.

ACCOUNT: CALTRANS BDS-VERSION 3.00 REL-10 05/10/92, FEB. 02, 1993 PAGE 25

D I V I S I O N O F S T R U C T U R E S – C A L T R A N S

LL NO. 4. **POSITIVE** LIVE LOAD MOMENT ENVELOPE AND ASSOCIATED SHEARS

*** SPECIAL TRUCK WITH 7 AXLES WAS REQUESTED THIS LIVE LOAD ***

MEM NO	LEFT	.1 PT	.2 PT	.3 PT	.4 PT	.5 PT	.6 PT	.7 PT	.8 PT	.9 PT	RIGHT
1	0.	774	13177.	16300.	**17414.**	16532.	13585.	8704.	2448.	0.	0.
SHEAR	0.0	478.1	339.6	201.1	78.9	-198.7	-317.8	-413.5	-495.8	0.0	0.0
2	0.	0.	2255.	7973.	12318.	14877.	15574.	14502.	11732.	6904.	0.
SHEAR	0.0	0.0	485.4	401.7	305.3	190.8	-92.3	-200.7	3330.3	-460.2	0.0
HORIZONTAL MEMBER STRESSES LL MAX POS BOTTOM FIBER											
1	0.	-497.	-846.	-1047.	-1118.	-1061.	-872.	-559.	-157.	0.	0.
2	0.	0.	-145.	-512.	-791.	-955.	-1000.	-931.	-753.	-443.	0.
HORIZONTAL MEMBER STRESSES LL MAX POS TOP FIBER											
1	0.	376.	640.	792.	846.	803.	660.	423.	119.	0.	0.
2	0.	0.	110.	387.	598.	722.	756.	704.	570.	335.	0.

ACCOUNT: CALTRANS BDS-VERSION 3.00 REL-10 05/10/92, FEB. 02, 1993 PAGE 30

D I V I S I O N O F S T R U C T U R E S – C A L T R A N S

PRESTRESS COMBINATION DATA

NO PRESTRESS COMBINATION DATA GIVEN SO DEFAULTS WERE USED.

LIVE LOAD NUMBER '1' RESULTS USED FOR P/S DESIGN AND OTHER LIVE LOADS, IF PRESENTED, ALSO WILL BE CHECKED TO DETERMINE THE ULTIMATE MOMENT CAPACITY.

THE FOLLOWING VALUES ARE BEING USED IN THE CALCULATION OF MOMENT & SHEAR REQUIREMENTS.

D.L. LOAD FACTOR: 1.30

L.L. LOAD FACTOR: 2.17 OR 1.30

PHI FACTOR FOR SHEAR : 0.90

PHI FACTOR FOR MOMENT: 0.95

LL NO. 1 ULTIMATE MOMENT APPLIED = 1.30 X (DL+ADL) + 2.17 X (LL+I) + 1.00 X (P/S SEC. MOMENT)

LL NO. 4 ULTIMATE MOMENT APPLIED = 1.30 X (DL+ADL) + 1.30 X (LL+I) + 1.00 X (P/S SEC. MOMENT)

LL NO. 1 ULTIMATE SHEAR APPLIED = 1.30 X (DL+ADL) + 2.17 X (LL+I) + 1.00 X (P/S SEC. SHEAR)

LL NO. 4 ULTIMATE SHEAR APPLIED = 1.30 X (DL+ADL) + 1.30 X (LL+I) + 1.00 X (P/S SEC. SHEAR)

```
ACCOUNT:                    CALTRANS BDS-VERSION 3.00  REL-10  05/10/92,    FEB. 02, 1993 PAGE  31

                D I V I S I O N   O F   S T R U C T U R E S  -  C A L T R A N S

INPUT PRESTRESSED DATA
TRIAL  1    FRAME 1    PATH
MEM NO. LLT/X   LLP/Y    LRT/Z     YLT/TYPE   YLP/SLOPE   YRT       U          K

1       0.00    0.40     0.10       2.80       5.50       1.25    0.200    0.00000

2       0.10    0.60     0.00       1.25       5.50       2.80    0.200    0.00000
XLT(FT) =   0.0  XRT(FT) =   0.0  STEEL STRESS(KSI) = 270.  JACKING % = 0.75  JACKING ENDS = L
ANCHOR SET(IN); LEFT = 0.35  RIGHT = 0.0  CONC. STRENGTH(PSI) = 4000. ALLOW. TENSION(PSI) = -39.
P-JACK(KIPS) =  0.  SHORTENING PERCENT= 100   TOTAL LOSSES(KSI) = 20   RELATIVE HUMIDITY % = 70.
LOW-LAX = YES   PLOT PATHS = NO    PLOT STRESSES = NO
```

ACCOUNT: CALTRANS BDS-VERSION 3.00 REL-10 05/10/92, FEB. 02, 1993 PAGE 32

D I V I S I O N O F S T R U C T U R E S – C A L T R A N S

CABLE PATH OFFSETS
TRIAL 1 FRAME 1 PATH

MEMBER	LEFT	.1 PT	.2 PT	.3 PT	.4 PT	.5 PT	.6 PT	.7 PT	.8 PT	.9 PT	RIGHT
1	2.80	3.98	4.82	5.33	5.50	5.36	4.93	4.23	3.23	1.96	1.25
2	1.25	1.96	3.23	4.23	4.93	5.36	5.50	5.33	4.82	3.98	2.80
CABLE PATH ECCENTRICITIES											
1	0.001	1.182	2.026	2.532	2.701	2.559	2.134	1.426	0.434	-0.841	-2.014
2	-2.014	-0.841	0.434	1.426	2.134	2.559	2.701	2.532	2.026	1.182	0.001
FORCE COEFFICIENTS											
1	0.837	0.841	0.846	0.850	0.854	0.856	0.860	0.863	0.867	0.868	0.854
2	0.854	0.841	0.836	0.833	0.829	0.826	0.822	0.819	0.815	0.811	0.807

THE POINT OF NO MOVEMENT FOR PRESTRESSING IS IN SPAN 2, 150.00 FEET FROM THE LEFT END OF THE SPAN

THE LEFT ANCHOR SET LENGTH IS 141.96 THE RIGHT ANCHOR SET LENGTH IS 0.00

THE FORCE COEF. AT THE LEFT END IS 0.837 THE FORCE COEF. AT THE RIGHT END IS 0.807

INITAL FORCE COEFF. AT POINT OF NO MOVEMENT = **0.905**

The Initial Force Coefficient at the point of no movement is used by the contractor to calculate elongations.

The Force Coefficients can be compared to those calculated by hand in Table 3-7.

ACCOUNT: CALTRANS BDS-VERSION 3.00 REL-10 05/10/92, FEB. 02, 1993 PAGE 35

D I V I S I O N O F S T R U C T U R E S – C A L T R A N S

TRIAL 1 FRAME 1 PATH

HORIZONTAL MEMBER STRESSES PRESTRESS ONLY BOTTOM FIBER AFTER ALL LOSSES (PSI) MEM

NO	LEFT	.1 PT	.2 PT	.3 PT	.4 PT	.5 PT	.6 PT	.7 PT	.8 PT	.9 PT	RIGHT
1	680.	1100.	1387.	1542.	1561.	1451.	1226.	883.	420.	-163.	-421.
2	-418.	-172.	392.	840.	1172.	1390.	1496.	1481.	1334.	1058.	655.

HORIZONTAL MEMBER STRESSES PRESTRESS ONLY TOP FIBER AFTER ALL LOSSES (PS1)

1	680.	369.	157.	46.	37.	124.	299.	564.	918.	1362.	1597.
2	1595.	1329.	896.	553.	296.	126.	41.	48.	154.	356.	655.

ACCOUNT: CALTRANS BDS-VERSION 3.00 REL-10 05/10/92, FEB. 02, 1993 PAGE 35

D I V I S I O N O F S T R U C T U R E S – C A L T R A N S

TRIAL 1 FRAME 1 PATH

HORIZONTAL MEMBER STRESSES PRESTRESS ONLY BOTTOM FIBER AFTER ALL LOSSES (PSI) MEM

NO	LEFT	.1 PT	.2 PT	.3 PT	.4 PT	.5 PT	.6 PT	.7 PT	.8 PT	.9 PT	RIGHT
1	680.	1100.	1387.	1542.	1561.	1451.	1226.	883.	420.	-163.	-421.
2	-418.	-172.	392.	840.	1172.	1390.	1496.	1481.	1334.	1058.	655.

HORIZONTAL MEMBER STRESSES PRESTRESS ONLY TOP FIBER AFTER ALL LOSSES (PS1)

1	680.	369.	157.	46.	37.	124.	299.	564.	918.	1362.	1597.
2	1595.	1329.	896.	553.	296.	126.	41.	48.	154.	356.	655.

ACCOUNT: CALTRANS BDS-VERSION 3.00 REL-10 05/10/92, FEB. 02, 1993 PAGE 36

D I V I S I O N O F S T R U C T U R E S – C A L T R A N S

TRIAL 1 FRAME 1 PATH
HORIZONTAL MEMBER MOMENTS DUE TO P/S MEM

NO	LEFT	.1 PT	.2 PT	.3 PT	.4 PT	.5 PT	.6 PT	.7 PT	.8 PT	.9 PT	RIGHT
1	-5.	-6482.	-10914.	-13268.	-13513.	-11765.	-8216.	-2830.	4415.	13530.	21780.
2	21725.	13307.	4469.	-2545.	-7763.	-11208.	-12902.	-12707.	-10463.	-6219.	-5.

VERTICAL MEMBER MOMENTS DUE TO P/S MEM

NO	LEFT	.1 PT	.2 PT	.3 PT	.4 PT	.5 PT	.6 PT	.7 PT	.8 PT	.9 PT	RIGHT
3	-55.	-55.	-55.	-55.	-55.	-55.	-55.	-55.	-55.	-55.	-55.

TANGENTIAL ROTATIONS - RADIANS - CLOCKWISE POSITIVE

SPAN	LT. END	RT. END	SPAN	LT. END	RT. END	SPAN	LT. END	RT. END
1	-0.003139	0.000036	2	0.000036	0.002770	3	0.000000	0.000036

HORIZONTAL MEMBER DEFLECTIONS IN FEET AT 1/4 POINTS FROM LEFT END - DOWNWARD POSITIVE

MEMBER 1	E= 3600.	0.000	-0.320	-0.373	-0.169	0.000
MEMBER 2	E= 3600.	0.000	-0.135	-0.303	-0.261	0.000

VERTICAL MEMBER DEFLECTIONS IN FEET AT 1/ 4 POINTS FROM LEFT END.

MEMBER 3	E= 3250.	0.000	0.000	0.000	0.001	0.000

MEMBER DEFLECTIONS HAVE BEEN MULTIPLIED BY A CREEP FACTOR OF 3. * * * * *

ACCOUNT: CALTRANS BDS-VERSION 3.00 REL-10 05/10/92, FEB. 02, 1993 PAGE 37

D I V I S I O N O F S T R U C T U R E S – C A L T R A N S

TRIAL 1 FRAME 1 PATH

HORIZONTAL MEMBER STRESSES FOR ALL P/S PATHS BEFORE LOSSES BOTTOM FIBER

MEM NO	LEFT	.1 PT	2 PT	.3 PT	.4 PT	.5 PT	.6 PT	.7 PT	.8 PT	9 PT	RIGHT
1	5.	6482.	10914.	13268.	13513.	11765.	8216.	2830.	4415.	13530.	780.
2	21725.	13307.	4469.	2545.	7763.	11208.	12902.	12707.	10463.	6219.	5.

HORIZONTAL MEMBER STRESSES FOR ALL P/S PATHS BEFORE LOSSES TOP FIBER (PSI)

NO	LEFT	.1 PT	.2 PT	.3 PT	.4 PT	.5 PT	.6 PT	.7 PT	.8 PT	.9 PT	RIGHT
1	55.	55.	55.	55.	355.	555.	475.	55.	558.	655.	465.
2	21725.	13307.	4469.	-2545.	7763.	-11208.	-12902.	-12707.	-10463.	-6219.	-5.

ACCOUNT: CALTRANS BDS-VERSION 3.00 REL-10 05/10/92, FEB. 02, 1993 PAGE 38

D I V I S I O N O F S T R U C T U R E S – C A L T R A N S

TRIAL 1 FRAME 1

HORIZONTAL MEMBER STRESSES FOR ALL P/S PATHS AFTER ALL LOSSES BOTTOM FIBER (PSI) MEM

NO	LEFT	1 PT	.2 PT	.3 PT	.4 PT	.5 PT	.6 PT	.7 PT	.8 PT	.9 PT	RIGHT
1	680.	1100.	1387.	1542.	1561.	1451.	1226.	883.	420.	-163.	-421.
2	-418.	-172.	392.	840.	1172.	1390.	1496.	1481.	1334.	1058.	655.

HORIZONTAL MEMBER STRESSES FOR ALL P/S PATHS AFTER ALL LOSSES TOP FIBER (PSI)

1	680.	369.	157.	46.	37.	124.	299.	564.	918.	1362.	1597.
2	1595.	1329.	896.	553.	296.	126.	41.	48.	154.	356.	655.

ACCOUNT: CALTRANS BDS-VERSION 3.00 REL-10 05/10/92, FEB. 02, 1993 PAGE 39

D I V I S I O N O F S T R U C T U R E S – C A L T R A N S

TRIAL 1 FRAME 1

HORIZONTAL MEMBER STRESSES DL + P/S BEFORE ALL LOSSES BOTTOM FIBER (PSI) MEM

NO	LEFT	.1 PT	.2 PT	.3 PT	.4 PT	.5 PT	.6 PT	.7 PT	.8 PT	.9 PT	RIGHT
1	761.	700.	653.	617.	590.	580.	601.	652.	731.	836.	842.
2	815.	889.	849.	818.	795.	782.	781.	783.	773.	757.	736.

HORIZONTAL MEMBER STRESSES DL + P/S BEFORE ALL LOSSES TOP FIBER (PSI)

1	760.	811.	853.	886.	913.	924.	912.	879.	824.	748.	459.
2	486.	667.	691.	710.	723.	727.	723.	717.	718.	725.	735.

ACCOUNT: CALTRANS BDS-VERSION 3.00 REL-10 05/10/92, FEB. 02, 1993 PAGE 40

D I V I S I O N O F S T R U C T U R E S – C A L T R A N S

TRIAL 1 FRAME 1

HORIZONTAL MEMBER STRESSES DL + P/S AFTER ALL LOSSES BOTTOM FIBER (PSI) MEM

NO	LEFT	.1 PT	.2 PT	.3 PT	.4 PT	.5 PT	.6 PT	.7 PT	.8 PT	.9 PT	RIGHT
1	680.	571.	491.	438.	410.	413.	462.	553.	685.	856.	891.
2	865.	910.	803.	718.	655.	615.	601.	604.	611.	628.	655.

HORIZONTAL MEMBER STRESSES DL + P/S AFTER ALL LOSSES TOP FIBER (PSI)

1	680.	768.	835.	881.	908.	909.	877.	813.	718.	591.	274.
2	301.	511.	585.	645.	687.	712.	718.	712.	700.	682.	655.

HORIZONTAL MEMBER STRESSES DL + ADDED DL + P/S AFTER ALL LOSSES BOTTOM FIBER (PSI)

1	680.	461.	305.	209.	171	198.	303.	484.	740.	1068.	1163
2	1130.	1134.	888.	693.	548.	455.	416.	422.	461.	539.	655.

HORIZONTAL MEMBER STRESSES DL + ADDED DL + P/S AFTER ALL LOSSES TOP FIBER (PSI)

1	680.	851.	975.	1054.	1088.	1072.	997.	865.	677.	431.	0*.
2	33.	341.	521.	664.	768.	834.	858.	849.	813.	749.	655.

* Point of control for Pjack Design

ACCOUNT: CALTRANS BDS-VERSION 3.00 REL-10 05/10/92, FEB. 02, 1993 PAGE 41

D I V I S I O N O F S T R U C T U R E S – C A L T R A N S

TRIAL 1 FRAME 1

HORIZONTAL MEMBER STRESSES DL + ADDED DL + MAX POS LL + I + P/S BOTTOM FIBER (PSI) MEM

NO	LEFT	.1 PT	.2 PT	.3 PT	.4 PT	.5 PT	.6 PT	.7 PT	.8 PT	.9 PT	RIGHT
1	680.	276.	-3.	-167.	-224.	-176.	-14.	254.	612.	1032.	1160.
2	1127.	1101.	766.	475.	250.	105.	48.	73.	175.	367.	655.

HORIZONTAL MEMBER STRESSES DL + ADDED DL + MAX POS LL + I + P/S TOP FIBER (PSI)

1	680.	991.	1208.	1338.	1387.	1355.	1237.	1039.	773.	458.	3
2	36.	367.	613.	828.	993.	1098.	1136.	1113.	1030.	879.	655.

HORIZONTAL MEMBER STRESSES DL + ADDED DL + MAX NEG LL + I + P/S BOTTOM FIBER (PSI)

1	680.	475.	332.	249.	224.	264.	383.	577.	885.	1371.	**1525*.**
2	1472.	1434.	1049.	807.	646.	537.	481.	471.	494.	555.	655.

HORIZONTAL MEMBER STRESSES DL + ADDED DL + MAX NEG LL + I + P/S FOR TOP FIBER (PSI)

1	680.	841.	955.	1024.	1048.	1022.	937.	795.	566.	202.	365.
2	-312.	114.	399.	577.	694.	772.	809.	812.	789.	737.	655.

**** MIN PJACK = **7420**. KIPS CONC STRENGTH AT 28 DAYS = **3811**. PSI AT STRESSING = 1680. PSI ***

**** REDESIGN HAS TAKEN PLACE FOR PJACK TO ELIMINATE TENSION UNDER (DL + ADDED DL + P/S) CONDITION.
**** POINT OF CONTROL CAN BE FOUND UNDER (DL + ADDED DL + P/S) STRESSES.

* $1525/.4 = 3811$ psi

ACCOUNT: CALTRANS BDS-VERSION 3.00 REL-10 05/10/92, FEB. 02, 1993 PAGE 42

D I V I S I O N O F S T R U C T U R E S – C A L T R A N S

TOTAL PE MOMENTS FOR ALL MEMBERS. MEM

NO	LEFT	.1 PT	.2 PT	.3 PT	.4 PT	.5 PT	.6 PT	.7 PT	.8 PT	.9 PT	RIGHT
1	-5.	-6482.	-10914.	-13268.	-13513.	-11765.	-8216.	-2830.	4415.	13530.	2178
2	21725.	13307.	4469.	-2545.	-7763.	-11208.	-12902.	-12707.	-10463.	-6219.	-5.
3	-55.	-55.	-55.	-55.	-55.	-55.	-55.	-55.	-55.	-55.	-55.

TOTAL P/S DEFLECTION FOR TRIAL

TANGENTIAL ROTATIONS - RADIANS - CLOCKWISE POSITIVE

SPAN	LT. END	RT. END	SPAN	LT. END	RT. END	SPAN	LT. END	RT. END
1	-0.003139	0.000036	2	0.000036	0.002770	3	0.000000	0.000036

HORIZONTAL MEMBER DEFLECTIONS IN FEET AT 1/ 4 POINTS FROM LEFT END - DOWNWARD POSITIVE

MEMBER 1	E= 3600.	0.000	-0.320	-0.373	-0.169	0.000
MEMBER 2	E= 3600.	0.000	-0.135	-0.303	-0.261	0.000

VERTICAL MEMBER DEFLECTIONS IN FEET AT 1/ 4 POINTS FROM LEFT END.

MEMBER 3	E= 3250.	0.000	0.000	0.000	0.001	0.000

MEMBER DEFLECTIONS HAVE BEEN MULTIPLIED BY A CREEP FACTOR OF 3. * * * * *

ACCOUNT: CALTRANS BDS-VERSION 3.00 REL-10 05/10/92, FEB. 02, 1993 PAGE 43

DIVISION OF STRUCTURES – CALTRANS

TOTAL TOP PF FOR TRIAL MEM

NO	LEFT	.1 PT	.2 PT	.3 PT	.4 PT	.5 PT	.6 PT	.7 PT	.8 PT	.9 PT	RIGHT
1	0.	0.	0.	0.	0.	0.	0.	0.	0.	6447.	6341.
2	6341.	6240.	0.	0.	0.	0.	0.	0.	0.	0.	0.

TOTAL BOTTOM PF FOR TRIAL

1	6215.	6246.	6277.	6307.	6338.	6358.	6383.	6408.	6434.	0.	0.
2	0.	0.	6207.	6181.	6155.	6129.	6103.	6080.	6049.	6018.	5988.

ACCOUNT: CALTRANS BDS-VERSION 3.00 REL-10 05/10/92, FEB. 02, 1993 PAGE 44

D I V I S I O N O F S T R U C T U R E S – C A L T R A N S

LONG TERM LOSSES TOTAL LOSS (KSI) = SH + ES + CRC + CRS

MEM NO	LEFT	.1 PT	.2 PT	.3 PT	.4 PT	.5 PT	.6 PT	.7 PT	.8 PT	.9 PT	RIGHT
1	21.1	20.7	19.8	18.9	18.6	18.9	19.9	21.1	22.0	21.3	15.6
2	15.9	20.2	21.4	21.5	21.1	20.6	20.3	20.2	20.2	20.3	20.3

* * * * THE AVERAGE LONG TERM PRESTRESS LOSSES IS 20.0 KSI. * * * *

SHEAR DESIGN - AASHTO 1981

LEFT .	1 PT	.2 PT	.3 PT	.4 PT	.5 PT	.6 PT	.7 PT	.8 PT	.9 PT	RIGHT
MEMBER: 1										
V-CABLE	500.	390.	261.	131.	1.	111.	223.	336.	449.	520. 69.
SECONDARY	56.	56.	56.	56.	56.	56.	56.	56.	56.	56. 56.
VU	1747.	1354.	972.	605.	255.	595.	969.	1355.	1739.	2109.2481.
VC	1774.	1433.	725.	381.	322.	447.	771.	1375.	1428.	187. 1257.
REQD WEB	48.	48.	48.	48.	48.	48.	48.	48.	48.	48. 48.
AS(IN)/FT	0.53	0.48 *	1.14	0.93	0.48 *	0.69	0.98	0.48 *	1.61	1.69 4.81
MEMBER: 2										
V-CABLE75.	543.	468.	350.	232	116	1.	137	272	405.	520.
SECONDARY	-60.	-60.	-60.	-60.	-60	60	-60.	60	-60	-60. -60.
VU	2372.	2014.	1659.	293.	929	584	254.	542	887	1247. 1619.
VC	1262.	1632.	1222.	1620.	885	516	322.	397	761	1507. 1772.
REQD WEB	48.	48.	48.	48.	48.	48.	48.	48.	48.	48. 48.
AS(IN)/FT	4.40	1.94	1.99	0.48*	0.48*	0.48*	0.48*	0.66	0.72	0.48* 0.48 *

NOTE: * AFTER REQD WEB INDICATES ADDITIONAL WEB WIDTH REQD. * AFTER AS(IN)/FT INDICATES MINIMUM

ACCOUNT: CALTRANS BDS-VERSION 3.00 REL-10 05/10/92, FEB. 02, 1993 PAGE 45

D I V I S I O N O F S T R U C T U R E S - C A L T R A N S

AASHTO ULTIMATE MOMENT

	SECOND MOMENT (K-FT)	ULT MOM APPLD (K-FT)	ULT MOM P/S CAP (K-FT)	AVERAGE FSU (KSI)	NEUTRAL AXIS (IN)	MILD STEEL REQD (SQ.IN)	COMBINED REINFORCEMENT INDEX	ULT MOM MILD CAP (K-FT)	ULT MOM TOTAL CAP (K-FT)
MEMBER: 1									
0.0 PT.	0.	0.	0.	0.00	0.00	0.00	0.000	0.	0.
0.1 PT.	901.	23889.	34062.	262.96	7.40	0.00	0.112	0.3	62.
0.2 PT.	1802.	40848.	41950.	264.03	7.43	0.00	0.093	0.	4950.
0.3 PT.	2703.	50883.	46409.	264.11	8.07	13.50	0.091	4577.	5086.
0.4 PT.	3604.	54385.	47865.	264.09	8.35	19.70	0.091	6668.	5433.
0.5 PT.	4505.	51369.	46648.	264.11	8.10	14.25	0.091	4830.	5177.
0.6 PT.	5406.	41748.	42958.	264.13	7.44	0.00	0.091	0.	4258.
0.7 PT.	6307.	25690.	36341.	263.33	7.41	0.00	0.106	0.	125.
0.8 PT.	7208.	5795.	24619.	241.65	16.01	0.00	0.222	0.	249.
0.9 PT.	8109.	28296.	36416.	250.86	18.43	0.00	0.222	0.	316.
1.0 PT.	9010.	58094.	43935.	261.37	11.95	44.06	0.137	14411.	586.
MEMBER: 2									
0.0 PT.	8955.	54072.	44288.	261.96	11.17	30.33	0.128	9970.	542.
0.1 PT.	8060.	28523.	36416.	250.86	18.43	0.00	0.222	0.	136.
0.2 PT.	7164.	10763.	24619.	241.65	16.01	0.00	0.222	0.	249.
0.3 PT.	6269.	19608.	36341.	263.33	7.41	0.00	0.106	0.	341.
0.4 PT.	5373.	34023.	42958.	264.13	7.44	0.00	0.091	0.	428.
0.5 PT.	4478.	42755.	46931.	264.50	7.44	0.00	0.084	0.	4.
0.6 PT.	3582.	45703.	48243.	264.59	7.47	0.00	0.082	0.	483.
0.7 PT.	2687.	42989.	46678.	264.48	7.44	0.00	0.084	0.	4678.
0.8 PT.	1791.	34705.	41950.	264.03	7.43	0.00	0.093	0.	410.
0.9 PT.	896.	20382.	34062.	262.96	7.40	0.00	0.112	0.	3462.
1.0 PT.	0.	0.	0.	0.00	0.00	0.00	0.000	0.	0.

NOTE: THE ULTIMATE MOMENT CAPACITY IS BASED ON THE CONCRETE STRENGTH OF 4.00 KSI. GIVEN BY USER.
THE MAXIMUM CALACULATED REINFORCEMENT INDEX ALLOWED FOR THIS STRUCTURE IS 0.306. * * * * *

ACCOUNT: CALTRANS BDS-VERSION 3.00 REL-10 05/10/92, FEB. 02, 1993 PAGE 46

D I V I S I O N O F S T R U C T U R E S – C A L T R A N S

TENDON ELONGATION

PATH NO.	P-JACK (KIPS)	% JACK	FY (KSI)	AS (SQ IN)	AVE STRESS (KSI)	TENDON LENGTH (FT) *	ELONGATION (IN)
	7420.	75.	270.		192.92	316.00	26.13

NOTE: TENDON LENGTH INCLUDES 4 FEET FOR JACKS.

MODULUS USED FOR P/S STEEL IS 28000. KSI.

ACCOUNT: CALTRANS BDS-VERSION 3.00 REL-10 05/10/92, FEB. 02, 1993 PAGE 47

D I V I S I O N O F S T R U C T U R E S – C A L T R A N S

'APPROXIMATE QUANTITY'
==========

*****	CONCRETE SUPER	740 C.Y.	*****
*****	CONCRETE SUB	26 C.Y.	*****
*****	P/S TRIAL	38888 LBS.	*****

THE SUPERSTRUCTURE CONCRETE QUANTITY IS BASED ON THE UNIT WEIGTH OF CONCRETE SUPPLIED ON THE FRAME DESCRIPTION CARD. IT ASSUMES THAT ALL THE DEAD LOAD IS GIVEN IN TRIAL 0.

THE CONCRETE SUBSTRUCTURE QUANTITY IS BASED ON TRIAL 0 ONLY.

THE P/S QUANTITIES FOR STRAND ONLY ARE FOR EACH TRIAL THAT WAS ENTERED AND IN THAT ORDER. STRAND USE IS BASED ON THE LENGTH FROM ANCHOR TO ANCHOR.

END OF JOB - 022086

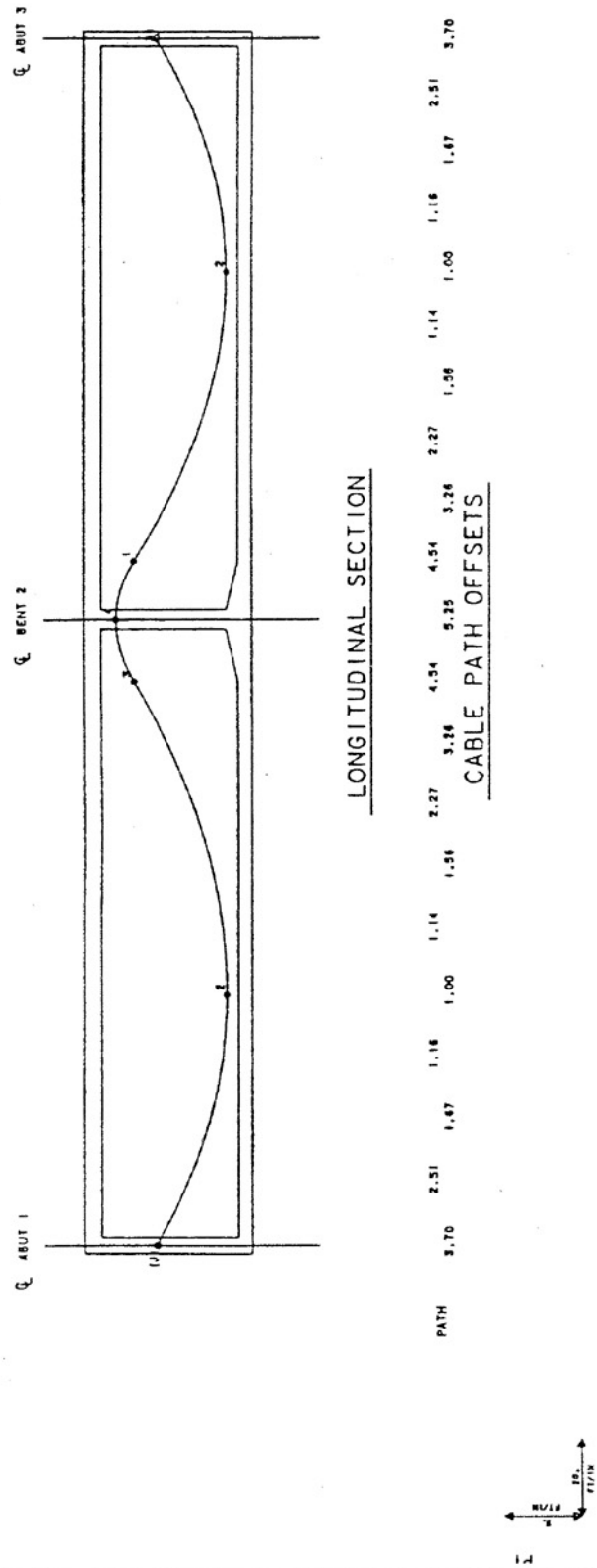
℄ ABUT 1
℄ BENT 2
℄ ABUT 3
PATH
3.70
2.51
1.67
1.16
1.00
1.14
1.56
2.27
3.26
4.54
5.25
4.54
3.26
2.27
1.56
1.14
1.00
1.16
1.67
2.51
3.70
LONGITUDINAL SECTION
CABLE PATH OFFSETS

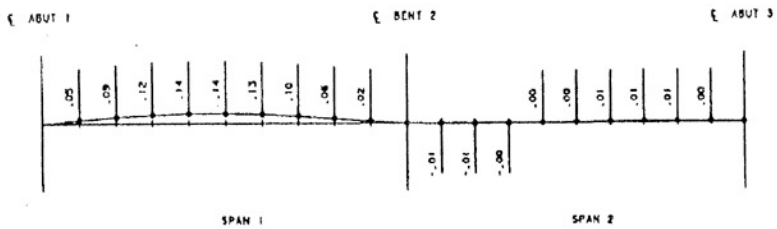

CAMBER DIAGRAM

●——● = CAMBER LINE

PRESTRESSING NOTES

1. DESIGN BASED ON 270 KSI LOW RELAXATION STRAND.
2. TENDON LENGTH INCLUDES 4 FEET FOR JACKS.
3. DISTRIBUTION OF PRESTRESS FORCE (PJACK) BETWEEN GIRDERS SHALL NOT EXCEED THE RATIO OF 3:2.
   THE MAXIMUM FINAL FORCE VARIATION BETWEEN THE GIRDERS SHALL NOT EXCEED 725 KIPS.
   CONCRETE: F'_c = 4000 PSI AT 28 DAYS.
   F'_{ci} = 3500 PSI AT TIME OF STRESSING.
   TOTAL NUMBER OF GIRDERS = 4
4. MODULUS USED FOR P/S STEEL IS 28000 KSI.
5. (J) INDICATES AT WHICH END JACKING IS DONE.
6. FORCE COEFF. = INITIAL STRESS AT POINT OF NO MOVEMENT OF PATH.
7. △ INDICATES POINT OF NO MOVEMENT OF PATH.
8. CAMBER DIAGRAM E_c = 3600/3 KSI.
9. OFFSETS FOR CABLE PATH ARE MEASURED IN FEET FROM THE SOFFIT AT 1/10TH POINTS.
10. CENTER OF GRAVITY OF PATH MAY BE ADJUSTED ±6" AT ANCHORAGE.
11. CAMBER IS MEASURED IN FEET FROM THE PROFILE GRADE LINE AT 1/10TH POINTS.
12. ⊙ INDICATES HIGH, LOW, OR INFLECTION POINTS -- PATH PARABOLIC BETWEEN POINTS.
13. CONTRACTOR SHALL SUBMIT ELONGATION CALCULATIONS BASED ON INITIAL STRESS AT △ = FORCE COEFF TIMES JACKING STRESS.
14. PATH NO.

P-JACK (KIPS)	% JACK	LOSSES (KSI)	FORCE COEFF	AS (SQ IN)	F'_s (KSI)	TENDON LENGTH (FT)	ELONGATION (IN)	ANCHOR SET LT	ANCHOR SET RT	POINT OF NO MOVEMENT SPAN	POINT OF NO MOVEMENT DIST
7420	78	20	.905	38.64	270	314.00	28.12	.375	0.000	2	150.00

CABLE DATA

(DISTANCES ARE MEASURED IN FEET FROM THE LEFT END OF EACH MEMBER.)
(OFFSETS ARE SHOWN BELOW DISTANCES.)

SPAN 1= 162.00			SPAN 2= 150.00		
1	2	3	1	2	3
0.00	64.80	145.80	15.00	90.00	150.00
3.70	1.00	4.54	4.54	1.00	3.70

3.5 Design of a 4-Span Continuous Cast-in-Place Prestressed Box Girder

3.5.1 Introduction

This example builds upon experience gained in the 2-span example and highlights the special considerations needed for multi-span frames. The BDS program serves as the main design tool with simple hand checks verifying output. As is the practice in design, only select points of control are hand checked against the computer output.

Only the point of control for Pjack determination will be hand verified. Shear design will be addressed in subsequent versions as the LRFD specification is implemented.

3.5.2 Bridge Configuration and Component Properties

- 4-Span continuous
- Span Lengths 120', 130', 120', 70' (assume physical constraints restrict bent location)
- EOD to EOD width 108'
- 4 column bents, Diameter 5'

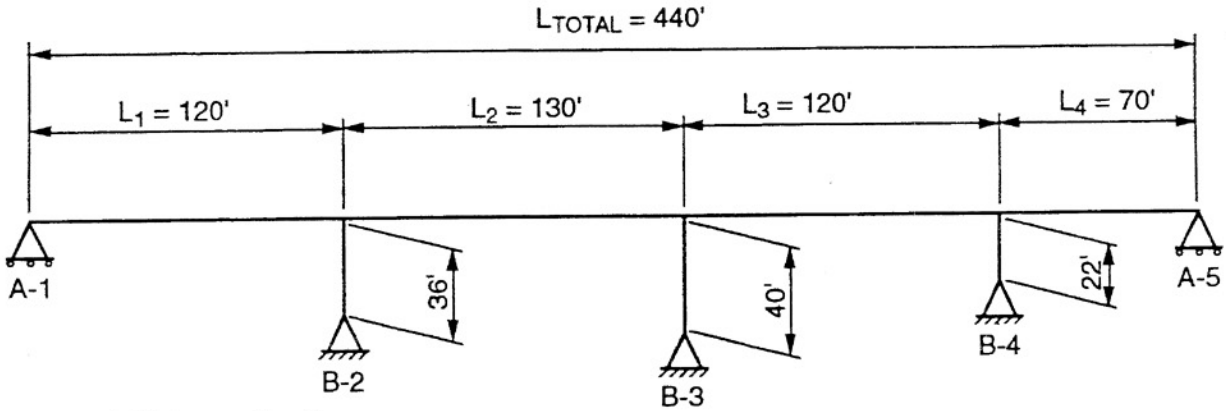

Note: Soffit flares at bents, length = 12'-0"

(a) Elevation
Figure 3-19

3.5.2.1 Structure Depth

$0.04 \times 130' = 5.2'$ Use 5'-3"

Use 5'-3" throughout structure for consistency

3.5.2.2 Girder Spacing

Assume 4'-0" overhang

108'-0" – (2 × 4'-0") – (2 × 6") = 99'

With 2 × D as a guide, use 11'-0" spacing

Therefore, 99/11 = 9 spaces, 10 girders

3.5.2.3 Typical Section

Based on 11'-0" girder spacing, *Bridge Design Details* suggests,

Top Slab $t = 8\frac{5}{8}$"

Bottom Slab $t = 7\frac{1}{2}$"

Assume 12'-0" bottom slab flare at all bents. t = 1'-0"

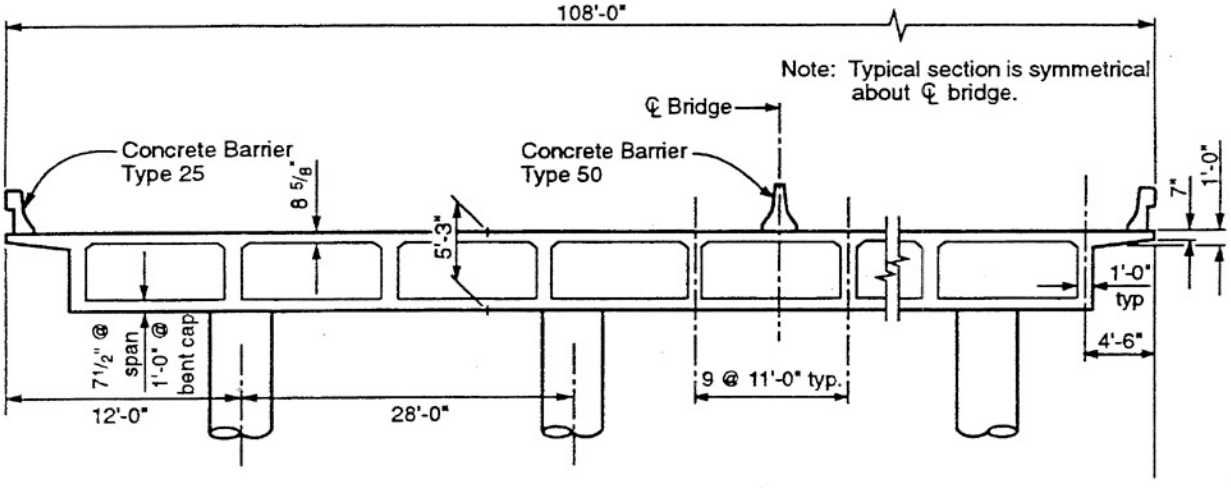

(b) Typical Section
Figure 3-20

3.5.3 Loads

3.5.3.1 Dead Load

Superstructure Dead Load is calculated from BDS using cross sectional properties. These properties can be checked by hand or by using the PROPS computer program.

		Midspan	Face at Bent
Area	(ft. 2)	180.25	213.63
y (b)	(ft.)	2.81	2.50
I	(ft.4)	783.48	896.62

3.5.3.2 Additional Dead Load

Future AC overlay and weight of barriers

AC = (weight of AC) x (width between barriers)

= 0.035 (108–2–2x1.75) = 3.59 k/ft

Barrier = 2 x 0.392 + 0.411 = 1.20 k/ft

ADL Total - Uniform Loading = 4.79 k/ft

3.5.3.3 Live Load

LL lanes = Deck width / wheel loads

(Spec. Table 3.23.1)

= 108.0 / 2 x 7 = 7.714 lanes

Use this number for both the HS20-44 and Permit truck.

3.5.4 Longitudinal Section

The cable path is most important when initially developing the longitudinal girder section. Once established, other parameters such as soffit flares and post tensioned anchorage requirements can be checked.

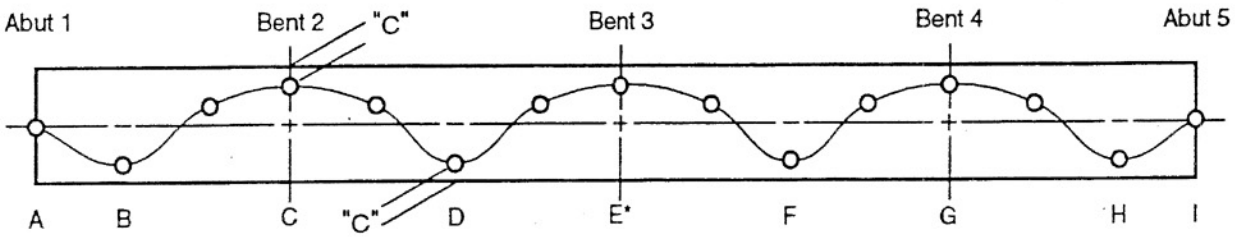

* Cable path slope at edge of support related to the moment and shear force.

POINT	"C" DIMENSION
A	@ C.G.
B	1'-0"
C	1'-2"
D	1'-0"
E	1'-2"
F	1'-0"
G	1'-2"
H	2'-3"
I	@ C.G.

Figure 3-23

3.5.5 Losses

Friction, Anchor Set, and Long Term losses will all be explored.

It should be noted that only one point in the structure will be hand checked, the 1.0 pt. Span 1, which is the same as the face of Bent 2. Initial BDS runs identified this as the point of Pjack design, therefore it is fitting to hand check this critical location.

3.5.5.1 Frictional Losses

Due to frictional forces that develop from the curvature of the prestress tendon and the deviation of the tendon within the semi-rigid duct.

The engineer must start at the beginning of the structure and incrementally sum up frictional losses incurred until the point of interest, in this case 1.0 pt. Span 1

Pt.	yb	Δe	L	$\alpha = 2e/L$	Σ	F.C.i
0.4	1.0	1.62	48	0.068	0.068	0.986
0.9	3.57	2.57	60	0.086	0.154	0.970
1.0	4.08	0.51	12	0.085	0.239	0.953

Frictional Coefficient (F.C.) = $e - (\mu\alpha + KL)$

$$= e - (0.2)(0.239) = 0.953$$

At midspan:	Clearance to mild reinforcement	4.5"
	Distance "D"	6.3"
		10.8" , say 12"
At Bents:	Thickness of Top Slab	8.63"
	Clearance to mild reinforcement	-1.0
	Distance "D"	6.3"
		13.93", say 14"

Check clearances at Anchorages

Memo to Designers 11-28 recommends height and width requirements for anchorage devices. A Pjack per girder of 1860 kips requires a height of 54", leaving only a 9" possible depth for a joint seal blockout. With this tight clearance and recent failures due to deep blockouts required for joint seal assemblies, the engineer should attempt a more in depth investigation of the anchorage area.

After consulting with the joint seal and prestress specialist, check space requirements based on manufacturers actual equipment dimensions. (See Figure 3-22)

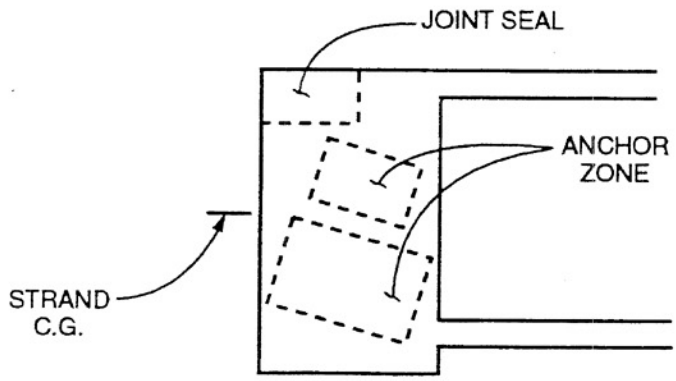

End Diaphragm
Figure 3-22

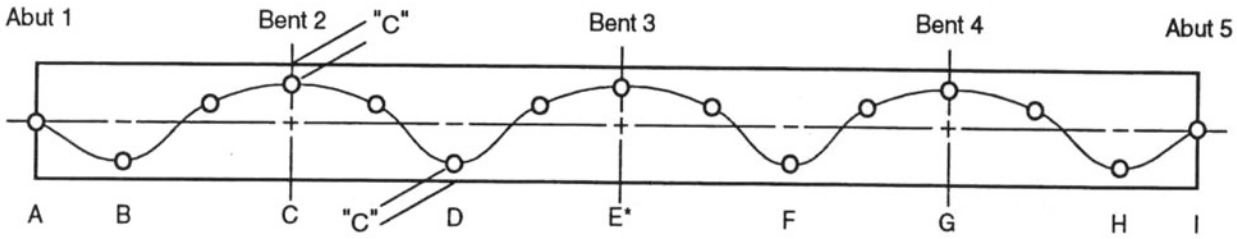

* Cable path slope at edge of support related to the moment and shear force.

POINT	"C" DIMENSION
A	@ C.G.
B	1'-0"
C	1'-2"
D	1'-0"
E	1'-2"
F	1'-0"
G	1'-2"
H	2'-3"
I	@ C.G.

Figure 3-23

3.5.5 Losses

Friction, Anchor Set, and Long Term losses will all be explored.

It should be noted that only one point in the structure will be hand checked, the 1.0 pt. Span 1, which is the same as the face of Bent 2. Initial BDS runs identified this as the point of Pjack design, therefore it is fitting to hand check this critical location.

3.5.5.1 Frictional Losses

Due to frictional forces that develop from the curvature of the prestress tendon and the deviation of the tendon within the semi-rigid duct.

The engineer must start at the beginning of the structure and incrementally sum up frictional losses incurred until the point of interest, in this case 1.0 pt. Span 1

Pt.	yb	Δe	L	$\alpha = 2e/L$	Σ	F.C.i
0.4	1.0	1.62	48	0.068	0.068	0.986
0.9	3.57	2.57	60	0.086	0.154	0.970
1.0	4.08	0.51	12	0.085	0.239	0.953

Frictional Coefficient (F.C.) = $e - (\mu\alpha + KL)$

$$= e - (0.2)(0.239) = 0.953$$

Stressing may take place at one or both ends of the structure. Jacking from both ends reduces the contributory length for frictional forces, therefore efficiently working the prestress strand. However, the labor involved with this procedure might negate any economy derived from efficient strand.

Studies conducted in 1971 showed that an increase in Pjack of 3% or less when jacking from one end only would be economical. This has been the historic "break-even" point ever since.

Check One End versus Two End Stressing

Two separate runs of BDS were made in the preliminary stage with the following results:

one end stressing Pjack = 15,700 k

two end stressing Pjack = 15,880 k

Difference is roughly 1% which is less than 3%, therefore one end stressing is more economical.

3.5.5.2 Anchor Set Losses

Anchor Set losses occur at a localized area at the post-tensioned anchorage zone. The strand wedges seat themselves in the anchor head when released by the hydraulic jacking ram. The anchor set loss assumed in design is 3/8".

$$x = \sqrt{\frac{e(L)L}{12d}} = \sqrt{\frac{28{,}000(0.375)(120)}{12(1-0.953)202.5}} = 105 < 120 \qquad \text{okay}$$

$$\Delta f = \frac{2dx}{L} = \frac{2(1-0.953)(105)}{120} = 0.082 \text{ Pjack}$$

Note that the length of influence for the anchor set loss is 105', therefore the 1.0 pt. Span 1 is not effected.

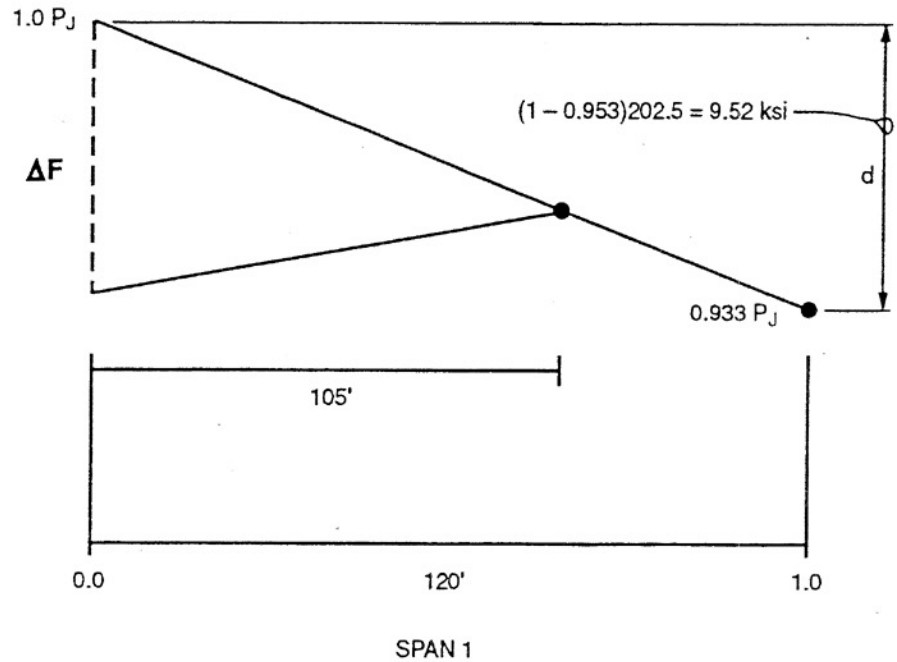

Anchor Set
Figure 3-24

3.5.5.3 Long Term Losses

Use Low Relaxation Strand with a 20 ksi long term loss

(Spec. Table 9.16.2.2)

20 ksi / 202.5 ksi = 0.0988 Pjack

3.5.6 Force Coefficient

Take the Frictional Force Coefficient (F.C.) and subtract anchor set and long term losses

F.C.	=	0.953
Anchor Set	=	0.0
Long Term	=	0.0988
Total	=	0.854

BDS had 0.858 (within 5%)

3.5.7 Secondary Moments

Secondary moments can be calculated by hand using the same procedure as the BDS program. BDS calculates at 1/40 span intervals, so hand calculations will obviously not be as accurate. A 10% ± allowance is reasonable with hand verification.

3.5.7.1 PE Diagram

The PE diagram must be developed to solve for secondary moments. Force coefficients and eccentricities from the BDS program are used.

SPAN 1	P	e	Pe
0.4	0.846	1.81	1.54
0.9	0.862	0.76	0.66
1.0	0.858	1.58	1.36

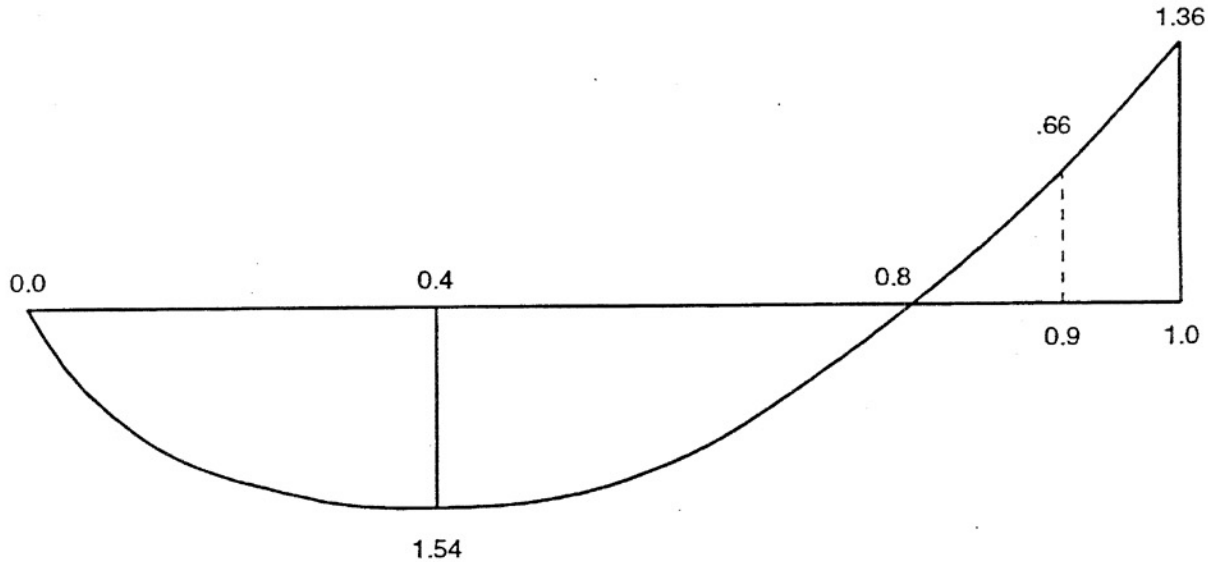

Secondary Moment (PE)
Figure 3-25

Take moments about Point A by summing the areas under the PE curve.

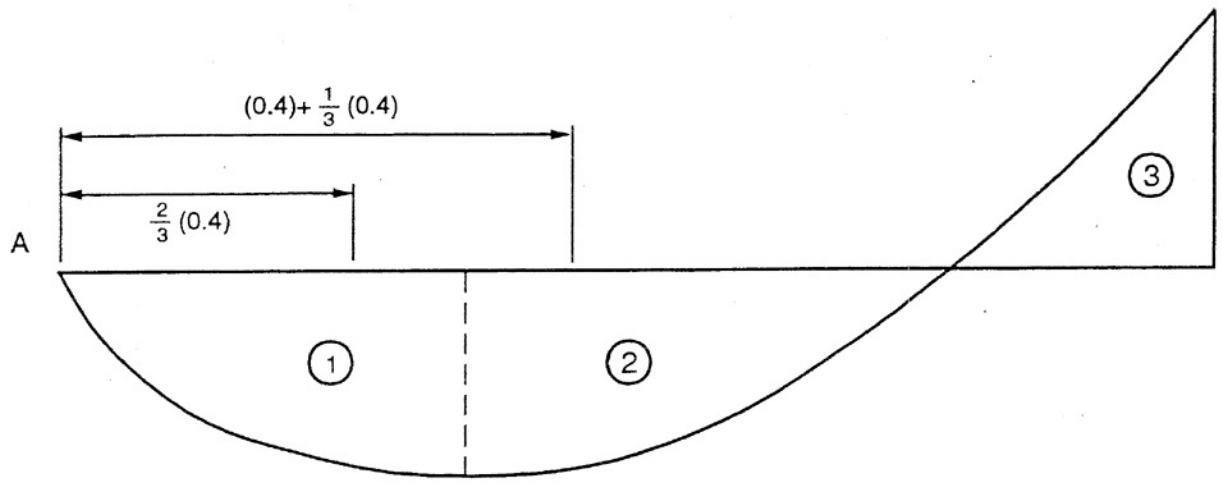

Areas
Figure 3-26

$\sum Ma = 0$

$(-1.54 \times 0.267 \times 0.267) + (-1.54 \times 0.267 \times 0.533) + (1.35 \times 0.2/2 \times 0.9)$

$= -0.110 - 0.219 + 0.122$

$= -0.207 \qquad = Ms/3$

Therefore, Ms = 0.621

BDS had 0.695, margin of error within 10%.

3.5.7.2 Distributed End Moments

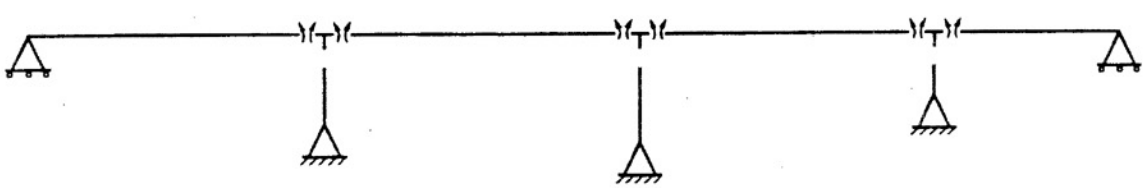

Fixed End Moment (FEM) Convention
Figure 3-27

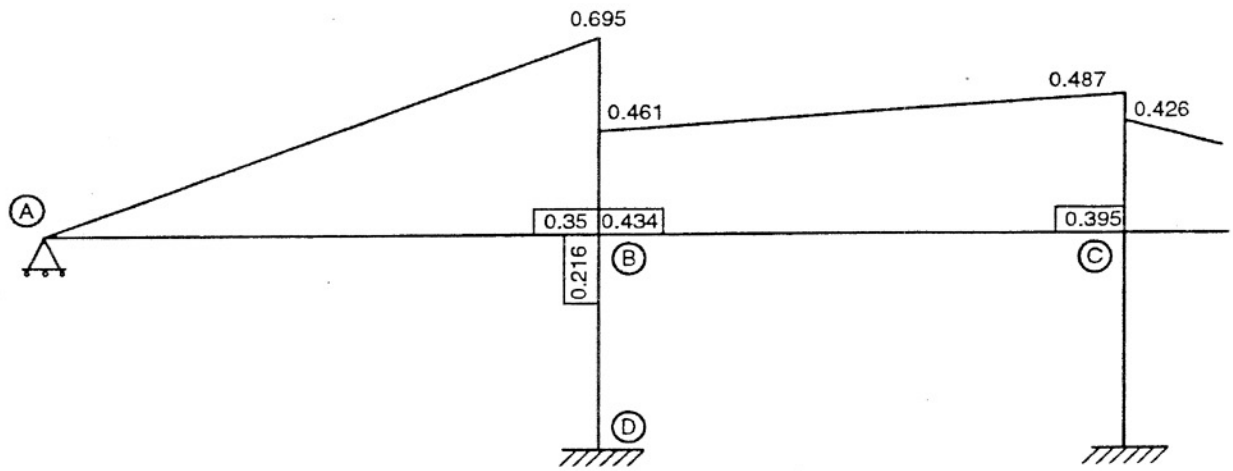

	A	BA	BC	BD	CB	
FEM	0	0.695	– 0.461		– 0.487	0.426
Δ		0.234			0.061	
BALANCE	0	– 0.082	– 0.102	– 0.025	– 0.024	
COM	0	0	– 0.025	– 0.012		
Δ			0.037			
BALANCE		– 0.013	– 0.016			
DEM		0.59				

Figure 3-28

Add the Distributed End Moment 0.59 to the original Pe moment at the 1.0 Pt. Span 1.

Pe = 1.36

DEM = 0.59

1.95

(BDS had 1.9445)

3.5.8 Prestress Shortening

Application of a Prestress force at the ends of a frame shorten the structure by an amount equal to PL/AE. The "L" term in this equation is taken from the point of concern to the point of zero structure movement due to shortening. This point of zero structure movement is calculated using individual column stiffnesses. Stiffer columns attract the point of no movement.

Memo to Designers Chapter 7 contains an example for calculating the point of no movement. This procedure is the same as what BDS uses.

For example, check the movement of Bent 2 due to the Pjack force. Find the average Force Coefficient (F.C.) between Bent 2 and the point of no movement, which is located 62' to the right of Bent 3. (approx. 0.5 pt.)

F.C. Bent 2 = 0.858

F.C. 0.5 Span 3 = 0.763

$$\frac{1.621}{2} = 0.810$$

The length from Bent 2 to the point of no movement is 192'. Use an area of 180.25 ft^2 (no bottom slab flare) to approximate the average area between the two points.

$$\Delta = \frac{(F.C.) \times L}{Area \times E}$$

$$\Delta = \frac{0.810 \times 192'}{(180.25) \times (3600) \times 144} = 0.00000166$$

BDS had 0.00000162

The Distributed End Moment (DEM) due to prestress superstructure shortening is +0.341. This decreases the overall prestress moment coefficient as calculated in Section 3.5.7.2 from 1.9445 to 1.799. Using the equation in Section 3.5.9, total prestress force required therefore increases by 5%.

The effects of prestress shortening on the required Pjack and on the applied column moments are especially important for longer structures when determining hinge locations.

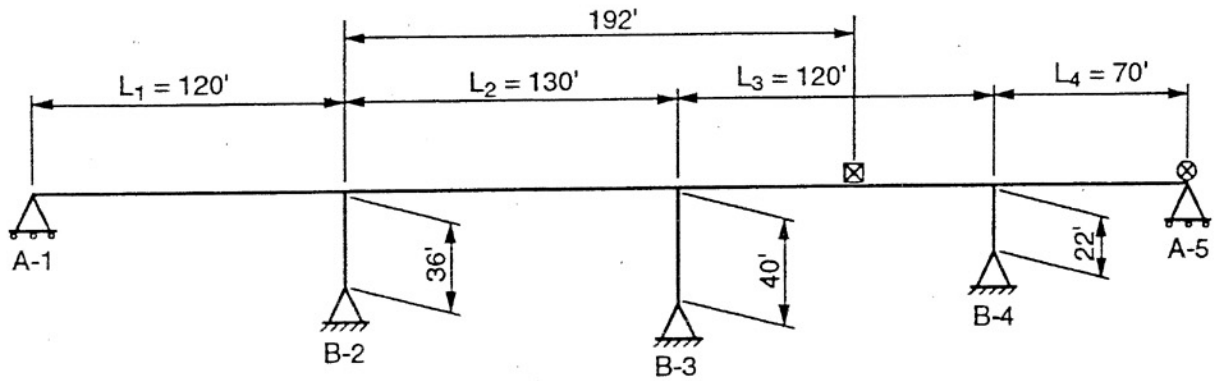

⊠ Point of no movement for structure shortening.

⊗ Point of no movement for prestress strand.

Static Diagram
Figure 3-29

3.5.9 Prestress Force

Knowing the point of control for Pjack design as the 1.0 pt. Span 1 Top fiber, hand verify.

DL + ADL + P/S

$$Pj = \frac{M \times (DL + ADL) \times (C/I)}{\frac{F.C.}{A} + \frac{M.C. \times c}{I}}$$

$$= \frac{(40{,}727 + 7214) \times (2.75/896.62)}{\frac{0.858}{213.63} + \frac{1.799 \times 2.75}{896.62}}$$

$$= 15{,}422 \text{ k}$$

BDS had 15,420.

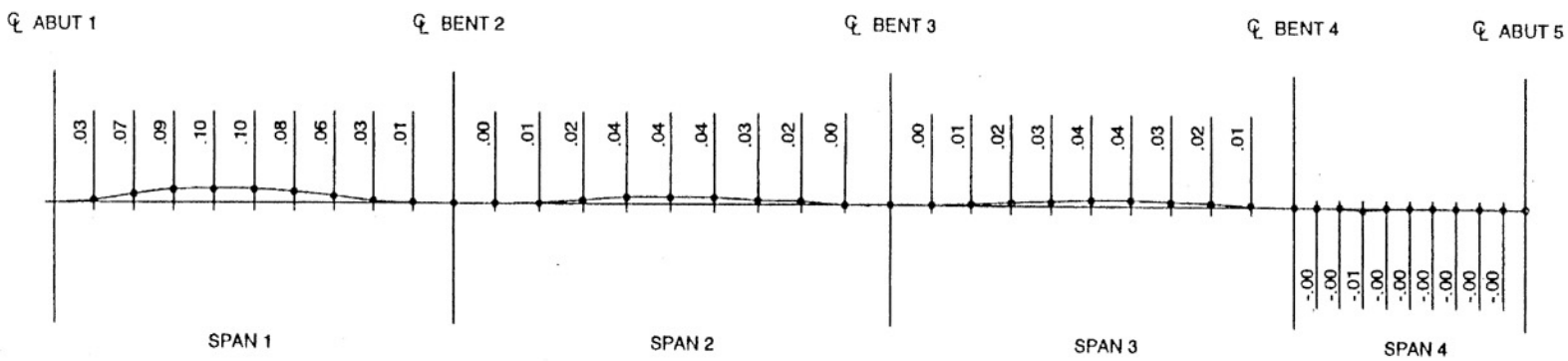

Camber Diagram

•——• = Camber Line

Prestressing Notes

1. Design based on 270 KSI Low Relaxation Strand.
2. Tendon length includes 4 feet for Jacks.
3. Distribution of Prestress Force (PJACK) between girders shall not exceed the ratio of 3:2.
   The maximum final force variation between thegirders shall not exceed 725 KIPS.
   Concrete: F'_c = 4000 PSI at 28 days.
   F'_c = 3500 PSI at time of stressing
   Total number of girders = 10
4. Modulus used for P/S steel is 28000 KSI.
5. (J) indicates at which end jacking is done.
6. Force COEFF. = initial stress at point of no movement of path.
7. △ indicates point of no movement of path.
8. Camber diagram E_c = 3600/3 KSI.
9. Offsets for cable path are measured in feet from the soffit at 1/10th points.
10. Center of gravity of path may be adjusted ±6" at anchorage.
11. Camber is measured in feet from the profile grade line at 1/10th points.
12. ⊙ indicates high, low, or inflection points -- path parabolic between points.
13. Contractor shall submit elongation calculations based on initial stress at △ = Force COEFF times jacking stress.
14. Path No.

P-Jack (KIPS)	% Jack	Losses (KSI)	Force COEFF	AS (Sq. In.)	F'_s (KSI)	Tendon length (Ft.)	Elongation (In.)	Anchor set LT	Anchor set RT	Point of no movement Span	Point of no movement Dist
15420	75	20	.800	76.14	270	444.00	34.49	.375	0.000	4	70.00

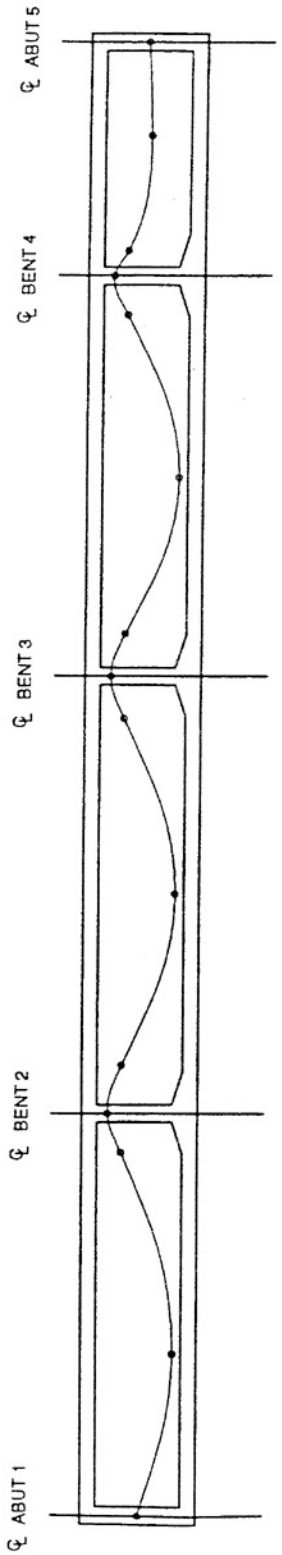

Longitudinal Section

Cable Path Offsets

Path																											
	2.62	1.40	1.00	1.10	1.41	2.64	4.08	2.38	1.15	1.61	1.00	1.15	2.38	4.08	3.46	1.61	1.15	1.00	1.15	2.38	4.08	3.46	1.61	2.38	3.22	2.49	2.25	2.34	2.62
	1.91	1.10	1.10	1.92	3.56	3.46	1.61																	3.46	3.77	2.79	2.31	2.27	2.45

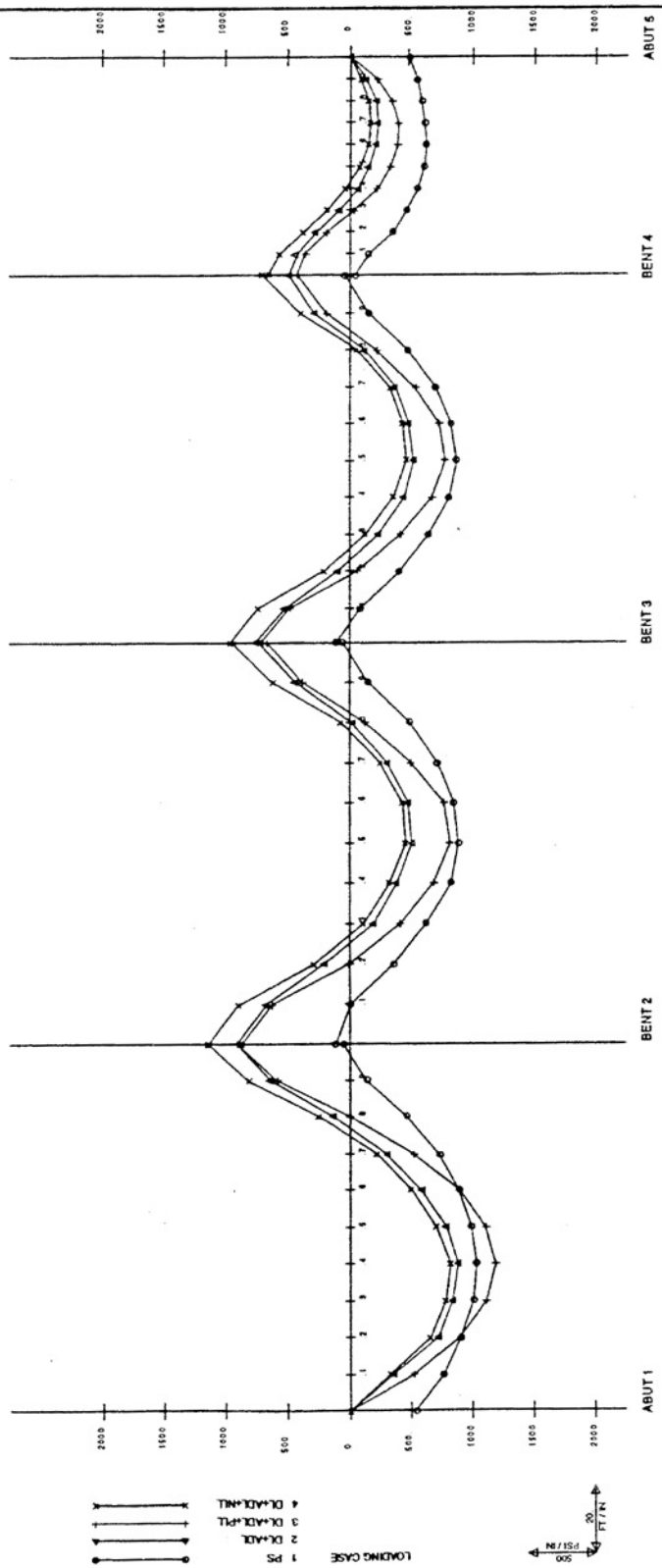
ABUT 1
BENT 2
BENT 3
BENT 4
ABUT 5
2000
1500
1000
500
0
500
1000
1500
2000
LOADING CASE
1 PS
2 DL+ADL
3 DL+ADL+PL
4 DL+ADL+NL
500 PSI / IN
20 FT / IN

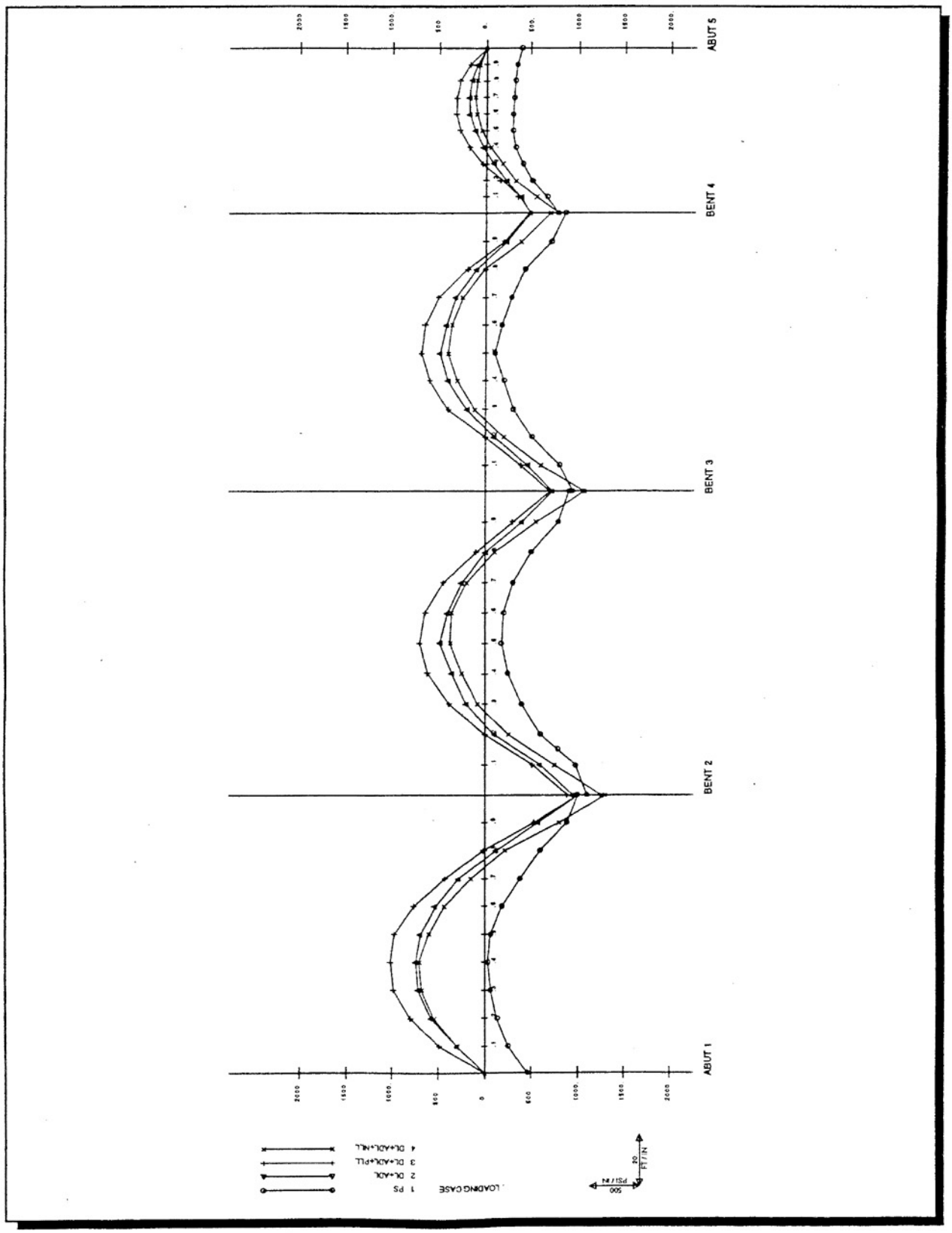
ABUT 1
BENT 2
BENT 3
BENT 4
ABUT 5
2000
1500
1000
500
0
500
1000
1500
2000
LOADING CASE
1 PS
2 DL+ADL
3 DL+ADL+PLL
4 DL+ADL+NLL
500 PSI/IN
20 FT/IN

```
1
0*********************************
0YOUR BDS1 FILENAME IS: FOURSPAN
0*********************************
 FOUR SPAN BRIDGE DESIGN PRACTICE EXAMPLE                                    000
 S
 S        PRESTRESS COMMITTEE
 S        ACCOUNT TSBFA
 S
 S
 S        STRESS FROM LEFT END
 S
 S            FRICTION FACTORS  - U = .2 & K = 0.0
 S
 S
          1 1 2R H1200      0    0          0150    0    0    0    0 0  0              100
          2 2 3  H1300      0    0          0150    0    0    0    0 0  0              100
          3 3 4  H1200      0    0          0150    0    0    0    0 0  0              100
          4 4 5 RH 700      0    0          0150    0    0    0    0 0  0              100
          5 6 2     360     0   50          0150    0    0    0    0 0  0              100
          6 7 3     400     0   50          0150    0    0    0    0 0  0              100
          7 8 4     220     0   50          0150    0    0    0    0 0  0              100
          0   1 0  0  01080 525 863 750 812012  0012   0 45 712 45 712       1  200
          0   2 0  0  01080 525 8631200 812012  0012   0 45 712 45 712       5  200
          1   0 1  0  0    0    0    0  0 00 0  00 0   0  0 0 0  0 0 0       0  200
          11080 1  0  0    0    0    0  0 00 0  00 0   0  0 0 0  0 0 0       0  200
          11200 5  0  0    0    0    0  0 00 0  00 0   0  0 0 0  0 0 0       0  200
          2   0 5  0  0    0    0    0  0 00 0  00 0   0  0 0 0  0 0 0       0  200
          2 120 1  0  0    0    0    0  0 00 0  00 0   0  0 0 0  0 0 0       0  200
          21180 1  0  0    0    0    0  0 00 0  00 0   0  0 0 0  0 0 0       0  200
          21300 5  0  0    0    0    0  0 00 0  00 0   0  0 0 0  0 0 0       0  200
          3   0 5  0  0    0    0    0  0 00 0  00 0   0  0 0 0  0 0 0       0  200
          3 120 1  0  0    0    0    0  0 00 0  00 0   0  0 0 0  0 0 0       0  200
          31080 1  0  0    0    0    0  0 00 0  00 0   0  0 0 0  0 0 0       0  200
          31200 5  0  0    0    0    0  0 00 0  00 0   0  0 0 0  0 0 0       0  200
          4   0 5  0  0    0    0    0  0 00 0  00 0   0  0 0 0  0 0 0       0  200
          4 120 1  0  0    0    0    0  0 00 0  00 0   0  0 0 0  0 0 0       0  200
          5   0 0 26     0    0    0    0 7854    12270          2                201
          6   0 2  0     0    0    0    0    0        0          0                201
          7   0 2  0     0    0    0    0    0        0          0                201
          1 1    4800U   0    0    0    0    0 0  FUTURE AC AND BARRIER WEIGHT    300
          1 2    4800U   0    0    0    0    0 0                                  300
          1 3    4800U   0    0    0    0    0 0                                  300
          1 4    4800U   0    0    0    0    0 0                                  300
          1 7714     0   0   0    0    000    HS20 LIVE LOADING                    400
          2 7714     0   0   0    0    000                                         400
          3 7714     0   0   0    0    000                                         400
          4 7714     0   0   0    0    000                                         400
          1 7714     0   0   0 0 PERMIT LIVE LOADING                               500
          2 7714     0   0   0 0                                                   500
          3 7714     0   0   0 0                                                   500
          4 7714     0   0   0 0                                                   500
         1011A 1 04010 263 425 117   0   0 0  0  0 0L    1 0    0 0    0 11        600
         1011A 2105010 117 425 117   0   0 0  0  0 0       0    0 0    0           600
         1011A 3105010 117 425 117   0   0 0  0  0 0       0    0 0    0           600
         1011A 41060 0 117 300 263   0   0 0  0  0 0       0    0 0    0           600
```

```
1ACCOUNT:                          CALTRANS BDS-VERSION 3.00  REL-10  05/10/92,    JAN. 05, 1994 PAGE   1
                    D I V I S I O N   O F   S T R U C T U R E S  -  C A L T R A N S
                AN BRIDGE DESIGN PRACTICE EXAMPLE

      ********************************
      *                              *
      *   NOTES TO USERS / DESIGNERS *
      *                              *
      ********************************

         BDS VERSION 02.1 WAS RELEASED ON DEC. 05, 1987 WITH MINOR MODIFICATIONS MADE BY THE DIVISION OF STRUCTURES.

       1. THE DEFAULTE CONCRETE STRENGTH FOR PRESTRESSED BRIDGES HAS BEEN CHANGED TO 4.00 KSI.
       2. THE PIN/ROLLER OR ROLLER/PIN PROBLEM FOR SIMPLY SUPPORTED BRIDGES HAS BEEN CORRECTED.
       3. THE REDUCED MOMENTS ARE REPORTED AT THE FACE OF THE SUPPORT AS PER SPECIFICATION 8.8.2.
       4. STIRRUP DESIGNS ARE VALID FOR PRESTRESSED CONCRETE STRUCTURES ONLY. THE FEATURE MUST NOT USED FOR
          CONVENTIONALLY REINFORCED STRUCTURES.
       5. IF A PRESTRESS LOAD COMBINATION (550) CARD IS NOT SUPPLIED, ALL PRESTRESSING OUTPUT WILL BE BASED ON THE
          RESULTS FROM LIVE LOAD NO. 1 EVEN IF OTHER LIVE LOADS ARE INPUT.
       6. WITH OR WITHOUT THE LIVE LOAD COMBINATION (550) CARD, USERS MAY CHOOSE TO RUN HS,P,AND OTHER LIVE LOADINGS
          CONCURRENTLY TO DESIGN PRESTRESSED CONCRETE BRIDGES.
       7. THE LONG TERM LOSSES FOR REGULAR PRESTRESSING STEEL (NON LOW-LAX) WILL BE DEFAULTED TO 32 KSI AUTOMATICALLY.
       8. THE DEFAULTED MODULUS OF ELASTICITY, EC, FOR THE SUBSTRUCTURE HAS BEEN REVISED FROM 3600 KSI TO 3250 KSI.
       9. UNLESS SPECIFIED BY THE USERS OTHERWISE, THE DEFLECTIONS USED FOR CAMBERS ARE REPORTED AT THE QUARTER POINTS.
      10. ANY SUGGESTIONS OR RECOMMENDATIONS FOR BDS UPGRADES SHOULD BE DIRECTED TO TIEN LEE AT 324-9239.
```

```
*********************************************
*                                           *
*   UPGRADE REMINDER FOR BDS VERSION 3.00   *
*                                           *
*********************************************
```

BDS VERSION 3.00 DOS-01 WAS RELEASED ON 07/11/1988 WITH THE FOLLOWING MODIFICATIONS :

1. A MINOR "BUG" WHICH AFFECTED THE SHEAR STIRRUP DESIGN AT CERTAIN POINTS HAS BEEN CORRECTED.
2. THE OUTPUT NOW CONTAINS UNITS FOR SECONDARY MOMENTS AND COLUMN DISPLACEMENTS.
3. THE BDS TOP FIBER AND BOTTOM FIBER STRESS PLOTS HAVE BEEN REARRANGED ON THE PLOT OUTPUT SHEET.
4. THE DISTRIBUTED SECONDARY COLUMN MOMENTS DUE TO EACH PRESTRESS CABLE PATH ARE REPORTED.
5. THE "POINT OF NO MOVEMENT" DUE TO FRICTION LOSS HAS BEEN REWORDED AS THE "POINT OF NO MOVEMENT FOR PRESTRESSING" AND THE "POINT OF NO MOVEMENT" DUE TO RIGIDITY HAS BEEN REWORDED AS THE "POINT OF NO MOVEMENT FOR SHORTENING".
6. THE REPORTED PJACK IS NOW ROUNDED TO THE NEAREST 10 KIPS (MEMO TO DESIGNER 11-4).
7. THE MAXIMUM NUMBER OF SPANS ALLOWED FOR LIVE LOAD ANALYSIS IS LIMITED TO 20. HOWEVER, A SPECIAL RUN CAN BE ARRANGED FOR STRUCTURES WITH SPANS MORE THAN 20.
8. THE WARNING MESSAGE ON THE ULTIMATE MOMENT OUTPUT SHEET WILL BE PRINTED ONLY WHEN THE COMBINED REINFORCEMENT INDEX "RF" IS GREATER THAN 0.30.
9. PARTIAL PRESTRESSING DESIGN IS NOW AVAILABLE FOR TESTING. THOSE DESIRING TO USE THIS OPTION SHOULD CONTACT TIEN LEE AT 4-9239 FOR ASSISTANCE.
10. DOS-02 DATED 8/23/88, A BUG WHICH CAUSED THE INTERNAL FORCE TENSION (T) NOT EQUAL COMPRESSION (C) AT THE ULTIMATE MOMENT STAGE HAS BEEN CORRECTED.
11. DOS-02 DATED 8/23/88, THE REQUIRED CONCRETE STRENGTH AT 28 DAYS WILL BE ROUNDED TO THE NEAREST 500 PSI. IF REQUIRED. (MEMO 11-16 DATED 2/2/1972)

```
*************************************************************
*                                                           *
*   UPGRADE REMINDER FOR CALTRANS BDS VERSION 3.00  REL-03  *
*                                                           *
*************************************************************
```

CALTRANS BDS VERSION 3.00 REL-03 WAS RELEASED ON 07/01/1990 WITH THE FOLLOWING MODIFICATIONS :

1. REL-03 DATED 9/04/88, METHODS USED TO COMPUTE THE COMBINED REINFORCING INDEX FOR FLANGED SECTION HAS BEEN MODIFIED TO AGREE WITH THE CODE REQUIREMENTS.
2. REL-03 DATED 10/18/88, BASED ON PCI'S STRESS VS STRAIN CURVE TO COMPUTE THE ULTIMATE MOMENT.
3. REL-03 DATED 10/22/88, SECONDARY MOMENT COEFFICIENTS DUE TO MEMBER SHORTENING IS NOW ECHOED BACK TO USER.
4. REL-03 DATED 11/15/88, THE END CONDITION (PIN OR ROLLER) WILL AFFECT THE FINAL PJACK DESIGN CONSIDERABLY. MODEL YOUR END CONDITIONS CAREFULLY BEFORE SUBMITTING YOUR BDS FILE FOR EXECUTION.
5. REL-03 DATED 01/02/90, MODIFY AND ADD SUBROUTINES TO COMPLY WITH MEMO TO DESIGNERS 11-30 DATAED MAR. 1990.
6. REL-03 DATED 01/02/90, THE SECONDARY MOMENT USING FOR THE ULTIMATE MO CHECK WAS INCORRECT HAS BEEN CORRECTED.
7. REL-03 DATED 01/02/90, THE DFLECTIONS DUE TO DEAD LOAD AND PRSTRESS HAVE BEEN MULTIPLIED BY A FACTOR OF 3.
8. REL-03 DATED 01/02/90, WARNING MESSAGES WILL BE PRINTED IF UPLIFTS DUE TO DL IN THE END SPANS ARE DETECTED.
9. REL-03 DATED 06/01/90, TO ENTER HORIZONTAL CURVATURE OF CURVED BRIDGE, THE NEW INPUT PANEL NAMED T IS NOW AVAILABLE FOR YOUR USE. (SORT NO. 555)

```
*********************************************
*                                           *
*   VERSION 3.00  REL-04  FEBRUARY 11, 1991 *
*                                           *
*********************************************
```

1. REL-04 DATED 01/06/91, BASE UPON THE PENDING NEW AASHTO SPECS, THE COMBINED REINFORCEMENT INDEX FOR P/S BRIDGE HAS BEEN SET EQUAL TO OR LESS THAN BETA1 TIMES 0.36. (BR. DESIGN SPECS 8.16.2.7, 9.17, 9.18 AND 9.19)
2. REL-04 DATED 01/17/91, BLANK OUT THE AREA OF P/S STEEL PRINTOUT AS PER MEMO.
3. REL-04 DATED 01/19/91, PRINT THE AVERAGE LONG TERM PRESTRESS LOSSES FOR DESIGN COMPARISON AGAINST DEFAULTS.
4. REL-04 DATED 02/01/91, ADD ROUTINES TO GENERATE THE TIME DEPENDENT CAMBER TABLE FOR FRAME W/INTERNAL HINGE.
7. COMPUTER SERVICE SECTION WILL UPGRADE CALTRANS' VERSION OF BDS PROGRAM CONTINUALLY. COMPUTER COMMITTEE AND COMPUTER SERVICE WELCOME YOUR SUGGESTION AND COMMENT.

```
*************************************************************
*                                                           *
*   UPGRADE REMINDER FOR CALTRANS BDS VERSION 3.00  REL-07  *
*                                                           *
*************************************************************
```

1. REL-07 DATED 09/21/91, FOR YOUR COULMN DESIGN, THE EFFECTIVE LENGTH FACTOR, K, INFORMATION HAS BEEN COMPUTED AND PRINTED.
2. REL-07 DATED 10/01/91, ADDED DEAD LOAD (DL TRIAL #1) WHICH WAS NOT INCLUDED ON THE PREVIOUS RELEASE OF BDS NOW BE PART OF DL PLUS LL OUTPUT.
3. REL-08 DATED 02/06/92, ADDED SUBROUTINE TO COMPUTE THE COLUMN EFFECTIVE LENGTH FACTOR (K) FOR YIELD PROGRAM.
4. REL-08 DATED 02/07/92, ELIMINATE SHEAR STIRRUP AND ULTIMATE MOMENT REPORT WHEN HINGE CURL ROUTINE ARE CALLED.
5. REL-09 DATED 02/20/92, REPORT DEAD LOAD, ADDED LOAD AND PRESTRESS REACTIONS AT THE INTERNAL HINGE POINT.
6. REL-10 DATED 05/10/92, CHANGE STANDARD DEFAULT VALUES OF U TO 0.20 AND K TO 0.0 FOR CIP PRESTRESSED BOX.
7. REL-10 DATED 05/26/92, ADD SUB TO COMPUTE THE COLUMN EFFECTIVE LENGTH FACTOR FOR FRAMES WHICH CAN NOT SWAY.

1ACCOUNT: CALTRANS BDS-VERSION 3.00 REL-10 05/10/92, JAN. 05, 1994 PAGE 2

D I V I S I O N O F S T R U C T U R E S – C A L T R A N S
AN BRIDGE DESIGN PRACTICE EXAMPLE

0FRAME DESCRIPTION

MEM NO	JT. LT	JT. RT	END COND LT	END COND RT	DIR	SPAN	I	SUPPORT OR HINGE	E	DEAD UNI	LOAD SEC	K LT	K RT	CARRY OVER FACTORS LT	CARRY OVER FACTORS RT	RECALL MEM
1	1	2	R		H	120.0	0.00	0.0	3600.	0.000	.150	0.00	0.00	0.00	0.00	0
2	2	3			H	130.0	0.00	0.0	3600.	0.000	.150	0.00	0.00	0.00	0.00	0
3	3	4			H	120.0	0.00	0.0	3600.	0.000	.150	0.00	0.00	0.00	0.00	0
4	4	5		R	H	70.0	0.00	0.0	3600.	0.000	.150	0.00	0.00	0.00	0.00	0
5	6	2				36.0	0.00	5.0	3250.	0.000	.150	0.00	0.00	0.00	0.00	0
6	7	3				40.0	0.00	5.0	3250.	0.000	.150	0.00	0.00	0.00	0.00	0
7	8	4				22.0	0.00	5.0	3250.	0.000	.150	0.00	0.00	0.00	0.00	0

```
1ACCOUNT:                                CALTRANS BDS-VERSION 3.00  REL-10  05/10/92,    JAN. 05, 1994 PAGE   3
                                 D I V I S I O N   O F   S T R U C T U R E S  -  C A L T R A N S
                              AN BRIDGE DESIGN PRACTICE EXAMPLE
0SECTION PROPERTIES - INPUT
0MEM        RE
  NO  LOC. CALL  Z     Y     W     D   TOP   BOT  NO  W  T  W  FACT T  W  FACT   L  EX  IN    L  EX  IN   E   STORE
                     +/-  CODE    V/D       H        Z        Y      AREA     IZZ        E     E-STORE  STORE

  0    0.1   0   0.0  0.0 108.0  5.25  8.63  7.50  8 12. 0 12. 0.00 0 12. 0.00  4.5  7. 12.  4.5  7. 12.        1
  0    0.2   0   0.0  0.0 108.0  5.25  8.63 12.00  8 12. 0 12. 0.00 0 12. 0.00  4.5  7. 12.  4.5  7. 12.        5
0SECTION PROPERTIES - OUTPUT
0MEM
  NO  LOC.   DEPTH    Z-BAR    Y-BAR    AREA        IZZ         IYY       E
0 0    0.1    5.25    54.00     2.81  180.25       783.48   166660.44
0 0    0.2    5.25    54.00     2.50  213.63       896.62   193314.00
0SECTION PROPERTIES - INPUT
0MEM        RE
  NO  LOC. CALL  Z     Y     W     D   TOP   BOT  NO  W  T  W  FACT T  W  FACT   L  EX  IN    L  EX  IN   E   STORE
                     +/-  CODE    V/D       H        Z        Y      AREA     IZZ        E     E-STORE  STORE

  1    0.0   1          ** RECALL ONLY
  1  108.0   1          ** RECALL ONLY
  1  120.0   5          ** RECALL ONLY
0SECTION PROPERTIES - OUTPUT
0MEM
  NO  LOC.   DEPTH    Z-BAR    Y-BAR    AREA        IZZ         IYY       E
0 1    0.0    5.25    54.00     2.81  180.25       783.48   166660.75   3600.00
0 1  108.0    5.25    54.00     2.81  180.25       783.48   166660.75   3600.00
0 1  120.0    5.25    54.00     2.50  213.63       896.62   193314.37   3600.00
0MEMBER  1 PROPERTIES
0 LENGTH: 120.0  MIN E*I: 0.282E+07  STIFF:  4.022 LT    4.097 RT  C.O.: 0.509 LT   0.499 RT
0SECTION PROPERTIES - INPUT
0MEM        RE
  NO  LOC. CALL  Z     Y     W     D   TOP   BOT  NO  W  T  W  FACT T  W  FACT   L  EX  IN    L  EX  IN   E   STORE
                     +/-  CODE    V/D       H        Z        Y      AREA     IZZ        E     E-STORE  STORE

  2    0.0   5          ** RECALL ONLY
  2   12.0   1          ** RECALL ONLY
  2  118.0   1          ** RECALL ONLY
```

```
1ACCOUNT:                                CALTRANS BDS-VERSION 3.00  REL-10  05/10/92,    JAN. 05, 1994 PAGE   4
                          D I V I S I O N   O F   S T R U C T U R E S  -  C A L T R A N S
                       AN BRIDGE DESIGN PRACTICE EXAMPLE
0SECTION PROPERTIES - INPUT
0MEM        RE
  NO  LOC. CALL  Z     Y     W     D   TOP   BOT  NO  W  T  W  FACT T  W  FACT   L  EX  IN    L  EX  IN   E   STORE
                     +/-  CODE    V/D       H        Z        Y      AREA     IZZ        E     E-STORE  STORE

  2  130.0   5          ** RECALL ONLY
0SECTION PROPERTIES - OUTPUT
0MEM
  NO  LOC.    DEPTH    Z-BAR    Y-BAR    AREA        IZZ          IYY        E
0 2    0.0     5.25    54.00     2.50  213.63       896.62    193314.37   3600.00
0 2   12.0     5.25    54.00     2.81  180.25       783.48    166660.75   3600.00
0 2  118.0     5.25    54.00     2.81  180.25       783.48    166660.75   3600.00
0 2  130.0     5.25    54.00     2.50  213.63       896.62    193314.37   3600.00
0MEMBER  2 PROPERTIES
0 LENGTH: 130.0  MIN E*I: 0.282E+07  STIFF:  4.113 LT    4.113 RT  C.O.: 0.508 LT   0.508 RT
0SECTION PROPERTIES - INPUT
0MEM        RE
  NO  LOC. CALL  Z     Y     W     D   TOP   BOT  NO  W  T  W  FACT T  W  FACT   L  EX  IN    L  EX  IN   E   STORE
                     +/-  CODE    V/D       H        Z        Y      AREA     IZZ        E     E-STORE  STORE

  3    0.0   5          ** RECALL ONLY
  3   12.0   1          ** RECALL ONLY
  3  108.0   1          ** RECALL ONLY
  3  120.0   5          ** RECALL ONLY
0SECTION PROPERTIES - OUTPUT
0MEM
  NO  LOC.    DEPTH    Z-BAR    Y-BAR    AREA        IZZ          IYY        E
0 3    0.0     5.25    54.00     2.50  213.63       896.62    193314.37   3600.00
0 3   12.0     5.25    54.00     2.81  180.25       783.48    166660.75   3600.00
0 3  108.0     5.25    54.00     2.81  180.25       783.48    166660.75   3600.00
0 3  120.0     5.25    54.00     2.50  213.63       896.62    193314.37   3600.00
0MEMBER  3 PROPERTIES
0 LENGTH: 120.0  MIN E*I: 0.282E+07  STIFF:  4.120 LT    4.120 RT  C.O.: 0.508 LT   0.508 RT
0SECTION PROPERTIES - INPUT
0MEM        RE
  NO  LOC. CALL  Z     Y     W     D   TOP   BOT  NO  W  T  W  FACT T  W  FACT   L  EX  IN    L  EX  IN   E   STORE
                     +/-  CODE    V/D       H        Z        Y      AREA     IZZ        E     E-STORE  STORE

  4    0.0   5          ** RECALL ONLY
```

```
1ACCOUNT:                          CALTRANS BDS-VERSION 3.00  REL-10  05/10/92,    JAN. 05, 1994 PAGE   5
                        D I V I S I O N   O F   S T R U C T U R E S  -  C A L T R A N S
                      AN BRIDGE DESIGN PRACTICE EXAMPLE
0SECTION PROPERTIES - INPUT
0MEM        RE
  NO  LOC. CALL  Z     Y     W     D   TOP   BOT  NO  W  T  W  FACT T  W  FACT   L  EX  IN    L  EX  IN   E   STORE
                    +/-  CODE    V/D       H        Z        Y      AREA     IZZ        E     E-STORE  STORE
  4   12.0   1          ** RECALL ONLY
0SECTION PROPERTIES - OUTPUT
0MEM
  NO  LOC.   DEPTH    Z-BAR    Y-BAR    AREA        IZZ         IYY        E
0 4    0.0    5.25    54.00     2.50  213.63       896.62   193314.37   3600.00
0 4   12.0    5.25    54.00     2.81  180.25       783.48   166660.75   3600.00
0 4   70.0    5.25    54.00     2.81  180.25       783.48   166660.75   3600.00
0MEMBER  4 PROPERTIES
0                   ** WARNING - MEMBER LENGTHS DISAGREE.  THAT GIVEN IN FRAME DESC. IS USED.
0 LENGTH:  70.0  MIN E*I: 0.282E+07  STIFF:  4.157 LT    4.033 RT  C.O.: 0.498 LT   0.514 RT
0SECTION PROPERTIES - INPUT
0MEM        RE
  NO  LOC. CALL  Z     Y     W     D   TOP   BOT  NO  W  T  W  FACT T  W  FACT   L  EX  IN    L  EX  IN   E   STORE
                    +/-  CODE    V/D       H        Z        Y      AREA     IZZ        E     E-STORE  STORE
  5    0.0   0          26     0.00     0.00     0.00     0.00   78.54    122.70   3250.00      *        2
0SECTION PROPERTIES - OUTPUT
0MEM
  NO  LOC.   DEPTH    Z-BAR    Y-BAR    AREA        IZZ         IYY        E
0 5    0.0    0.00     0.00     0.00   78.54       122.70        0.00   3250.00
0MEMBER  5 PROPERTIES
0 LENGTH:  36.0  MIN E*I: 0.399E+06  STIFF:  4.000 LT    4.000 RT  C.O.: 0.500 LT   0.500 RT
0SECTION PROPERTIES - INPUT
0MEM        RE
  NO  LOC. CALL  Z     Y     W     D   TOP   BOT  NO  W  T  W  FACT T  W  FACT   L  EX  IN    L  EX  IN   E   STORE
                    +/-  CODE    V/D       H        Z        Y      AREA     IZZ        E     E-STORE  STORE
  6    0.0   2          ** RECALL ONLY
0SECTION PROPERTIES - OUTPUT
0MEM
  NO  LOC.   DEPTH    Z-BAR    Y-BAR    AREA        IZZ         IYY        E
0 6    0.0    0.00     0.00     0.00   78.54       122.70        0.00   3250.00
0MEMBER  6 PROPERTIES
0 LENGTH:  40.0  MIN E*I: 0.399E+06  STIFF:  4.000 LT    4.000 RT  C.O.: 0.500 LT   0.500 RT
0SECTION PROPERTIES - INPUT
0MEM        RE
  NO  LOC. CALL  Z     Y     W     D   TOP   BOT  NO  W  T  W  FACT T  W  FACT   L  EX  IN    L  EX  IN   E   STORE
                    +/-  CODE    V/D       H        Z        Y      AREA     IZZ        E     E-STORE  STORE
```

```
1ACCOUNT:                                CALTRANS BDS-VERSION 3.00  REL-10  05/10/92,    JAN. 05, 1994 PAGE   6
                          D I V I S I O N   O F   S T R U C T U R E S  -  C A L T R A N S
                       AN BRIDGE DESIGN PRACTICE EXAMPLE
0SECTION PROPERTIES - INPUT
0MEM        RE
  NO  LOC. CALL  Z     Y     W     D   TOP   BOT  NO  W  T  W  FACT T  W  FACT   L  EX  IN    L  EX  IN   E   STORE
                    +/-  CODE    V/D       H        Z        Y      AREA     IZZ        E     E-STORE  STORE
  7    0.0   2          ** RECALL ONLY
0SECTION PROPERTIES - OUTPUT
0MEM
  NO  LOC.   DEPTH    Z-BAR    Y-BAR    AREA        IZZ          IYY        E
0 7    0.0    0.00     0.00     0.00   78.54        122.70         0.00   3250.00
0MEMBER  7 PROPERTIES
0 LENGTH:  22.0  MIN E*I: 0.399E+06  STIFF:  4.000 LT    4.000 RT  C.O.: 0.500 LT   0.500 RT
1ACCOUNT:
```

```
                    CALTRANS BDS-VERSION 3.00  REL-10  05/10/92,    JAN. 05, 1994 PAGE   7

                       D I V I S I O N   O F   S T R U C T U R E S  -  C A L T R A N S
                    AN BRIDGE DESIGN PRACTICE EXAMPLE
        NO ERRORS FOUND
0FRAME PROPERTIES
                END                                    SUPPORT                  CARRY OVER          DISTRIBUTION
  MEM      JT   COND                                     OR                        FACTORS              FACTORS
  NO     LT  RT  LT RT   DIR     SPAN    MIN E*I      HINGE        E            LT      RT          LT    RT
 /-/  /---/ /--/ /-/ /--/ /---/  /----/  /----/ /--------/  /-------/
   1      1   2   R        H     120.0  0.2821E+07   0.0        3600.       0.509   0.000       0.000  0.350
   2      2   3            H     130.0  0.2821E+07   0.0        3600.       0.508   0.508       0.434  0.395
   3      3   4            H     120.0  0.2821E+07   0.0        3600.       0.508   0.508       0.429  0.329
   4      4   5        R   H      70.0  0.2821E+07   0.0        3600.       0.000   0.514       0.424  0.000
   5      6   2                   36.0  0.3988E+06   5.0        3250.       0.500   0.500       0.000  0.216
   6      7   3                   40.0  0.3988E+06   5.0        3250.       0.500   0.500       0.000  0.176
   7      8   4                   22.0  0.3988E+06   5.0        3250.       0.500   0.500       0.000  0.247
0***** IF MEMBER IS HORIZONTAL SUPPORT OR HINGE FIELD EQUALS LOCATION OF HINGE FROM LEFT END OF MEMBER *****
 ***** IF MEMBER IS VERTICAL SUPPORT OR HINGE FIELD EQUALS SUPPORT WIDTH USED FOR MOMENT REDUCTION *****
```

1ACCOUNT: CALTRANS BDS-VERSION 3.00 REL-10 05/10/92, JAN. 05, 1994 PAGE 8

D I V I S I O N O F S T R U C T U R E S - C A L T R A N S
AN BRIDGE DESIGN PRACTICE EXAMPLE

LONGITUDINAL DIRECTION COLUMN EFFECTIVE LENGTH FACTOR, K

COLUMN NO.	RELATIVE STIFFNESS RATIO G (TOP)	G (BOT)	EFFECTIVE LENGTH FACTOR K
5	0.41	1.00	1.21
6	0.32	1.00	1.19
7	0.49	1.00	1.22

NOTE : THE COLUMN EFFECTIVE LENGTH FACTOR MAY BE USED AS AN INPUT FOR YOUR COLUMN ANALYSIS/DESIGN PROGRAM.
THE LOWER END OF COLUMN COULD BE EITHER PINNED, FIXED OR SOMETHING IN BETWEEN.
FOR PINNED END G = 10 (ENTER P)
FIXED END G = 1 (BLANK)
A VALUE OF (G) MAY BE ENTERED AT THE LOWER END OF COLUMN FOR DIFFERENT TYPE OF FOUNDATION.
THE COLUMN EFFECTIVE LENGTH FACTOR MAY BE EQUAL TO OR LESS THAN 1.00 FOR FRAMES WHICH CAN NOT SWAY.

1ACCOUNT: CALTRANS BDS-VERSION 3.00 REL-10 05/10/92, JAN. 05, 1994 PAGE 9

D I V I S I O N O F S T R U C T U R E S – C A L T R A N S

AN BRIDGE DESIGN PRACTICE EXAMPLE

0FIXED END MOMENTS TRIAL 0

MEM NO	FIXED END MOMENTS LT	RT	MEM NO	FIXED END MOMENTS LT	RT	MEM NO	FIXED END MOMENTS LT	RT
1	0.	-49578.	2	-38589.	-38589.	3	-32913.	-32913.
4	-17069.	0.	5	0.	0.	6	0.	0.
7	0.	0.						

1ACCOUNT: CALTRANS BDS-VERSION 3.00 REL-10 05/10/92, JAN. 05, 1994 PAGE 10

D I V I S I O N O F S T R U C T U R E S – C A L T R A N S
AN BRIDGE DESIGN PRACTICE EXAMPLE

0SIDESWAY DIAGNOSTICS

0 NO ERRORS FOUND

RESULTS OF 1 INCH SWAY TO THE RIGHT

VERTICAL MEMBER	SHEAR (KIPS)	MOMENTS (FT-KIPS) LT	RT
5	1037.8	-19838.	17522.
6	874.7	-17645.	17344.
7	4407.8	-52098.	44874.

BASED ON E = 3250. KSI.

```
1ACCOUNT:                          CALTRANS BDS-VERSION 3.00  REL-10  05/10/92,    JAN. 05, 1994 PAGE  11

                        D I V I S I O N   O F   S T R U C T U R E S  -  C A L T R A N S
                     AN BRIDGE DESIGN PRACTICE EXAMPLE
0                          *** SIDESWAY INCLUDED. ***
 HORIZONTAL MEMBER MOMENTS  TRIAL  0
 MEM
  NO   LEFT     .1 PT    .2 PT    .3 PT    .4 PT    .5 PT    .6 PT    .7 PT    .8 PT    .9 PT    RIGHT
0 1        0.   12998.   22103.   27315.   28633.   26057.   19588.    9226.   -5029.  -23179.  -45345.
                                                                                                  (  -40727.)
  2   -44017.  -22482.   -5645.    6621.   14319.   17447.   16006.    9995.    -586.  -15735.  -35584.
     (  -39876.)                                                                                  (  -31767.)
  3   -36473.  -17825.   -3195.    7543.   14386.   17336.   16393.   11557.    2827.   -9797.  -26438.
     (  -32588.)                                                                                  (  -22971.)
  4   -25163.  -16585.   -9434.   -3618.     874.    4040.    5882.    6399.    5591.    3458.       0.
     (  -22100.)
0HORIZONTAL MEMBER STRESSES  TRIAL  0    BOTTOM FIBER
0 1        0.    -324.    -551.    -681.    -714.    -650.    -488.    -230.     125.     578.     789.
0 2      772.     561.     141.    -165.    -357.    -435.    -399.    -249.      15.     392.     615.
0 3      631.     445.      80.    -188.    -359.    -432.    -409.    -288.     -70.     244.     445.
0 4      428.     372.     235.      90.     -22.    -101.    -147.    -160.    -139.     -86.       0.
0HORIZONTAL MEMBER STRESSES  TRIAL  0     TOP FIBER
0 1        0.     281.     477.     590.     618.     563.     423.     199.    -109.    -501.    -867.
0 2     -849.    -486.    -122.     143.     309.     377.     346.     216.     -13.    -340.    -676.
0 3     -694.    -385.     -69.     163.     311.     374.     354.     250.      61.    -212.    -489.
0 4     -471.    -356.    -204.     -78.      19.      87.     127.     138.     121.      75.       0.
0VERTICAL MEMBER MOMENTS  TRIAL  0
0 5      -23.     112.     248.     383.     518.     653.     788.     923.    1058.    1193.    1328.
0 6      964.     779.     593.     408.     223.      38.    -148.    -333.    -518.    -704.    -889.
0 7     1080.    1100.    1119.    1139.    1158.    1177.    1197.    1216.    1235.    1255.    1274.
0HORIZONTAL MEMBER SHEARS  TRIAL  0
0 1    1245.4    921.0    596.5    272.1    -52.4   -376.9   -701.3  -1025.8  -1350.2  -1674.7  -2029.2
0 2    1852.8   1470.8   1119.3    767.8    416.4     64.9   -286.6   -638.1   -989.6  -1341.1  -1723.1
0 3    1735.9   1381.4   1057.0    732.5    408.1     83.6   -240.8   -565.3   -889.7  -1214.2  -1568.7
```

```
ACCOUNT:                          CALTRANS BDS-VERSION 3.00  REL-10  05/10/92,    JAN. 05, 1994 PAGE  13

                        D I V I S I O N   O F   S T R U C T U R E S  –  C A L T R A N S
                     AN BRIDGE DESIGN PRACTICE EXAMPLE
0TRIAL  0
0TANGENTIAL ROTATIONS - RADIANS - CLOCKWISE POSITIVE
    SPAN    LT. END     RT. END     SPAN    LT. END     RT. END     SPAN    LT. END     RT. END
0     1     0.002568   -0.000409     2     -0.000409   -0.000026     3    -0.000026   -0.000451
0     4    -0.000451   -0.000234     5      0.000000   -0.000409     6     0.000000   -0.000026
0     7     0.000000   -0.000451
0HORIZONTAL MEMBER DEFLECTIONS IN FEET AT 1/ 4 POINTS FROM LEFT END - DOWNWARD POSITIVE
0     MEMBER  1    E= 3600.     0.000     0.197     0.239     0.122     0.000
0     MEMBER  2    E= 3600.     0.000     0.057     0.124     0.074     0.000
0     MEMBER  3    E= 3600.     0.000     0.064     0.123     0.081     0.000
0     MEMBER  4    E= 3600.     0.000    -0.005     0.006     0.009     0.000
0VERTICAL MEMBER DEFLECTIONS IN FEET AT 1/ 4 POINTS FROM LEFT END.
0     MEMBER  5    E= 3250.     0.000     0.000    -0.002    -0.006    -0.014
0     MEMBER  6    E= 3250.     0.000    -0.002    -0.007    -0.012    -0.014
0     MEMBER  7    E= 3250.     0.000    -0.001    -0.004    -0.008    -0.014


 MEMBER DEFLECTIONS HAVE BEEN MULTIPLIED BY A CREEP FACTOR OF 3.  * * * * *
```

```
ACCOUNT:                          CALTRANS BDS-VERSION 3.00  REL-10  05/10/92,    JAN. 05, 1994 PAGE  13

                        D I V I S I O N   O F   S T R U C T U R E S  –  C A L T R A N S
                     AN BRIDGE DESIGN PRACTICE EXAMPLE
0TRIAL  0
0TANGENTIAL ROTATIONS - RADIANS - CLOCKWISE POSITIVE
    SPAN    LT. END     RT. END     SPAN    LT. END     RT. END     SPAN    LT. END     RT. END
0     1     0.002568   -0.000409     2     -0.000409   -0.000026     3    -0.000026   -0.000451
0     4    -0.000451   -0.000234     5      0.000000   -0.000409     6     0.000000   -0.000026
0     7     0.000000   -0.000451
0HORIZONTAL MEMBER DEFLECTIONS IN FEET AT 1/ 4 POINTS FROM LEFT END - DOWNWARD POSITIVE
0     MEMBER  1    E= 3600.     0.000     0.197     0.239     0.122     0.000
0     MEMBER  2    E= 3600.     0.000     0.057     0.124     0.074     0.000
0     MEMBER  3    E= 3600.     0.000     0.064     0.123     0.081     0.000
0     MEMBER  4    E= 3600.     0.000    -0.005     0.006     0.009     0.000
0VERTICAL MEMBER DEFLECTIONS IN FEET AT 1/ 4 POINTS FROM LEFT END.
0     MEMBER  5    E= 3250.     0.000     0.000    -0.002    -0.006    -0.014
0     MEMBER  6    E= 3250.     0.000    -0.002    -0.007    -0.012    -0.014
0     MEMBER  7    E= 3250.     0.000    -0.001    -0.004    -0.008    -0.014


 MEMBER DEFLECTIONS HAVE BEEN MULTIPLIED BY A CREEP FACTOR OF 3.  * * * * *
```

```
1
1ACCOUNT:                          CALTRANS BDS-VERSION 3.00  REL-10  05/10/92,    JAN. 05, 1994 PAGE  14

                        D I V I S I O N   O F   S T R U C T U R E S  -  C A L T R A N S
                    AN BRIDGE DESIGN PRACTICE EXAMPLE
0LOAD DATA  TRIAL  1
                              LOAD                          FIXED END MOMENTS
   LINE MEM    W OR P    CODE       A       B          LEFT       RIGHT  DEFLT    COMMENTS
          1      4.800     U        0.0     0.0          0.          0.    0    FUTURE AC AND BARRIER WEIGHT
                             ASSUMED DATA 120.0
          2      4.800     U        0.0     0.0          0.          0.    0
                             ASSUMED DATA 130.0
          3      4.800     U        0.0     0.0          0.          0.    0
                             ASSUMED DATA 120.0
          4      4.800     U        0.0     0.0          0.          0.    0
                             ASSUMED DATA  70.0
0FIXED END MOMENTS  TRIAL  1

    MEM     FIXED END MOMENTS          MEM     FIXED END MOMENTS          MEM     FIXED END MOMENTS
     NO      LT          RT             NO      LT          RT             NO      LT          RT

      1        0.     -8781.             2    -6829.      -6829.             3    -5822.      -5822.
      4    -3011.        0.             5        0.          0.             6        0.          0.
      7        0.        0.
```

```
1ACCOUNT:                          CALTRANS BDS-VERSION 3.00  REL-10  05/10/92,    JAN. 05, 1994 PAGE  15

                          D I V I S I O N   O F   S T R U C T U R E S  -  C A L T R A N S
                       AN BRIDGE DESIGN PRACTICE EXAMPLE
0                            *** SIDESWAY INCLUDED. ***
 HORIZONTAL MEMBER MOMENTS  TRIAL  1
 MEM
  NO   LEFT      .1 PT    .2 PT    .3 PT    .4 PT    .5 PT    .6 PT    .7 PT    .8 PT    .9 PT    RIGHT
0 1        0.    2307.    3924.    4849.    5083.    4625.    3477.    1637.    -894.   -4116.   -8029.
                                                                                                  (   -7214.)
  2    -7793.   -3993.   -1004.    1174.    2541.    3096.    2840.    1773.    -105.   -2795.   -6295.
     (   -7062.)                                                                                  (   -5622.)
  3    -6453.   -3165.    -568.    1338.    2553.    3077.    2909.    2050.     500.   -1741.   -4673.
     (   -5768.)                                                                                  (   -4062.)
  4    -4447.   -2944.   -1676.    -644.     154.     716.    1043.    1135.     992.     614.       0.
     (   -3911.)
0HORIZONTAL MEMBER STRESSES  TRIAL  1    BOTTOM FIBER
0 1        0.     -58.     -98.    -121.    -127.    -115.     -87.     -41.      22.     103.     140.
0 2      137.     100.      25.     -29.     -63.     -77.     -71.     -44.       3.      70.     109.
0 3      112.      79.      14.     -33.     -64.     -77.     -73.     -51.     -12.      43.      79.
0 4       76.      66.      42.      16.      -4.     -18.     -26.     -28.     -25.     -15.       0.
0HORIZONTAL MEMBER STRESSES  TRIAL  1     TOP FIBER
0 1        0.      50.      85.     105.     110.     100.      75.      35.     -19.     -89.    -154.
0 2     -150.     -86.     -22.      25.      55.      67.      61.      38.      -2.     -60.    -120.
0 3     -123.     -68.     -12.      29.      55.      66.      63.      44.      11.     -38.     -86.
0 4      -83.     -63.     -36.     -14.       3.      15.      23.      25.      21.      13.       0.
0VERTICAL MEMBER MOMENTS  TRIAL  1
0 5       -4.      20.      44.      68.      92.     116.     140.     164.     188.     212.     236.
0 6      171.     138.     105.      72.      40.       7.     -26.     -59.     -92.    -125.    -158.
0 7      192.     195.     199.     202.     205.     209.     212.     216.     219.     223.     226.
0HORIZONTAL MEMBER SHEARS  TRIAL  1
0 1    221.1    163.5    105.9     48.3     -9.3    -66.9   -124.5   -182.1   -239.7   -297.3   -354.9
0 2    323.5    261.1    198.7    136.3     73.9     11.5    -50.9   -113.3   -175.7   -238.1   -300.5
0 3    302.8    245.2    187.6    130.0     72.4     14.8    -42.8   -100.4   -158.0   -215.6   -273.2
```

```
1ACCOUNT:                          CALTRANS BDS-VERSION 3.00  REL-10  05/10/92,    JAN. 05, 1994 PAGE  16

                        D I V I S I O N   O F   S T R U C T U R E S  -  C A L T R A N S
                     AN BRIDGE DESIGN PRACTICE EXAMPLE
0                          *** SIDESWAY INCLUDED. ***
0HORIZONTAL MEMBER SHEARS  TRIAL  1
 MEM
  NO   LEFT     .1 PT    .2 PT    .3 PT    .4 PT    .5 PT    .6 PT    .7 PT    .8 PT    .9 PT    RIGHT
0 4     231.5    197.9    164.3    130.7     97.1     63.5     29.9     -3.7    -37.3    -70.9   -104.5
0VERTICAL MEMBER SHEARS  TRIAL 1
0 5       6.7      6.7      6.7      6.7      6.7      6.7      6.7      6.7      6.7      6.7      6.7
0 6      -8.2     -8.2     -8.2     -8.2     -8.2     -8.2     -8.2     -8.2     -8.2     -8.2     -8.2
0 7       1.6      1.6      1.6      1.6      1.6      1.6      1.6      1.6      1.6      1.6      1.6
0VERTICAL MEMBER REACTIONS  TRIAL  1
0MEM        LT                RT                MEMBER
 NO      REACTION          REACTION            WEIGHT

   5       678.4             678.4
   6       603.3             603.3
   7       504.7             504.7
```

```
1ACCOUNT:                          CALTRANS BDS-VERSION 3.00  REL-10  05/10/92,    JAN. 05, 1994 PAGE  17

                        D I V I S I O N   O F   S T R U C T U R E S  –  C A L T R A N S
                     AN BRIDGE DESIGN PRACTICE EXAMPLE
0TRIAL  1
0TANGENTIAL ROTATIONS - RADIANS - CLOCKWISE POSITIVE
    SPAN    LT. END     RT. END     SPAN    LT. END     RT. END     SPAN    LT. END     RT. END
0     1     0.000456   -0.000073     2     -0.000073   -0.000005     3    -0.000005   -0.000080
0     4    -0.000080   -0.000042     5      0.000000   -0.000073     6     0.000000   -0.000005
0     7     0.000000   -0.000080
0HORIZONTAL MEMBER DEFLECTIONS IN FEET AT 1/ 4 POINTS FROM LEFT END - DOWNWARD POSITIVE
0     MEMBER  1    E= 3600.     0.000     0.035     0.042     0.022     0.000
0     MEMBER  2    E= 3600.     0.000     0.010     0.022     0.013     0.000
0     MEMBER  3    E= 3600.     0.000     0.011     0.022     0.014     0.000
0     MEMBER  4    E= 3600.     0.000    -0.001     0.001     0.002     0.000
0VERTICAL MEMBER DEFLECTIONS IN FEET AT 1/ 4 POINTS FROM LEFT END.
0     MEMBER  5    E= 3250.     0.000     0.000     0.000    -0.001    -0.003
0     MEMBER  6    E= 3250.     0.000     0.000    -0.001    -0.002    -0.003
0     MEMBER  7    E= 3250.     0.000     0.000    -0.001    -0.001    -0.003


 MEMBER DEFLECTIONS HAVE BEEN MULTIPLIED BY A CREEP FACTOR OF 3.  * * * * *
```

```
1ACCOUNT:                                CALTRANS BDS-VERSION 3.00  REL-10  05/10/92,    JAN. 05, 1994 PAGE  18

                          D I V I S I O N   O F   S T R U C T U R E S  –  C A L T R A N S
                       AN BRIDGE DESIGN PRACTICE EXAMPLE
0LIVE LOAD DIAGNOSTICS

0          NO ERRORS FOUND
0SUPERSTRUCTURE LIVE LOAD            HS20 LIVE LOADING
0           NUMBER OF LIVE LOAD LANES          RESISTING MOMENT OF        PLOT   PLOT   INFLU-
 MEM     SUPERSTRUCTURE   SUBSTRUCTURE              UNIT STEEL            M   S SCALE   ENCE
  NO.   LT.END   RT.END   LT.END    RT.END     POSITIVE   NEGATIVE         ENV.          LINES   GEN
 ____________________________________________

   1      7.714   7.714    1.0       1.0          0.         0.            0      0      NO      NO
   2      7.714   7.714    1.0       1.0          0.         0.
   3      7.714   7.714    1.0       1.0          0.         0.
   4      7.714   7.714    1.0       1.0          0.         0.
0LIVE    ———TRUCK———————     ——LANE——          NO.  LIVE
 LOAD     P1     D1    P2   D2     P3      UNIFORM   MOM.   SHEAR          LL   LOAD
 NO.                                                 RIDER  RIDER IMPACT  LNS. SIDESWAY


 1.       8.0   14.0  32.0  14.0   32.0     0.640   18.0   26.0   YES    0.00 NO

          COMMENTS: HS20-44 AASHTO LOADING
+                                          WITHOUT ALTERNATIVE


  AASHTO IMPACT FACTORS CALCULATED BY PROGRAM
0        MEM        IMPACT
          NO          %


          1          20.4
          2          19.6
          3          20.4
          4          25.6
```

```
1ACCOUNT:                          CALTRANS BDS-VERSION 3.00  REL-10  05/10/92,    JAN. 05, 1994 PAGE  19

                        D I V I S I O N   O F   S T R U C T U R E S  –  C A L T R A N S
                    AN BRIDGE DESIGN PRACTICE EXAMPLE
0LL NO. 1.                   NEGATIVE LIVE LOAD MOMENT ENVELOPE AND ASSOCIATED SHEARS
0MEM    LEFT    .1 PT    .2 PT    .3 PT    .4 PT    .5 PT    .6 PT    .7 PT    .8 PT    .9 PT    RIGHT
 NO
0 1        0.    -514.   -1028.   -1542.   -2056.   -2570.   -3084.   -3598.   -4552.   -8415.  -14453.
                                                                                                  (  -13195.)
 SHEAR     0.0    -42.8    -42.8    -42.8    -42.8    -42.8    -42.8    -42.8    -39.8   -429.3   -577.4
  2   -14245.   -8136.   -4665.   -3940.   -3725.   -3510.   -3295.   -3080.   -3609.   -7041.  -13029.
      (  -13070.)                                                                                 (  -11878.)
 SHEAR   548.5    376.8     -6.9     16.5     16.5     16.5     16.5     16.5     13.8   -371.7   -536.0
  3   -12608.   -7346.   -4440.   -3628.   -3068.   -2507.   -1946.   -1631.   -2109.   -5453.  -10811.
      (  -11512.)                                                                                 (   -9695.)
 SHEAR   513.8    347.2    -40.4     46.7     46.7     46.7     46.7    -29.6     -3.2   -366.5   -508.8
  4    -9150.   -6374.   -4625.   -4047.   -3469.   -2891.   -2313.   -1734.   -1156.    -578.       0.
      (   -8159.)
 SHEAR   452.5    344.3     82.6     82.6     82.6     82.6     82.6     82.6     82.6     82.6      0.0
0HORIZONTAL MEMBER STRESSES LL MAX NEG  BOTTOM FIBER
0 1        0.      13.      26.      38.      51.      64.      77.      90.     114.     210.     256.
0 2      253.     203.     116.      98.      93.      88.      82.      77.      90.     176.     230.
0 3      223.     183.     111.      90.      76.      63.      49.      41.      53.     136.     188.
0 4      158.     143.     115.     101.      87.      72.      58.      43.      29.      14.       0.
0HORIZONTAL MEMBER STRESSES LL MAX NEG  TOP FIBER
0 1        0.     -11.     -22.     -33.     -44.     -55.     -67.     -78.     -98.    -182.    -281.
0 2     -278.    -176.    -101.     -85.     -80.     -76.     -71.     -67.     -78.    -152.    -253.
0 3     -245.    -159.     -96.     -78.     -66.     -54.     -42.     -35.     -46.    -118.    -206.
0 4     -174.    -137.    -100.     -87.     -75.     -62.     -50.     -37.     -25.     -12.       0.
```

1ACCOUNT: CALTRANS BDS-VERSION 3.00 REL-10 05/10/92, JAN. 05, 1994 PAGE 20

D I V I S I O N O F S T R U C T U R E S – C A L T R A N S

AN BRIDGE DESIGN PRACTICE EXAMPLE

0LL NO. 1. DEAD LOAD PLUS NEGATIVE LIVE LOAD MOMENT ENVELOPE

0MEM NO	LEFT	.1 PT	.2 PT	.3 PT	.4 PT	.5 PT	.6 PT	.7 PT	.8 PT	.9 PT	RIGHT
1	0.	14792.	24999.	30622.	31660.	28113.	19982.	7266.	-10475.	-35709.	-67828.
											(-61137.)
2	-66055.	-34610.	-11314.	3856.	13135.	17033.	15551.	8688.	-4300.	-25571.	-54909.
	(-60008.)										(-49267.)
3	-55535.	-28336.	-8203.	5253.	13872.	17906.	17356.	11976.	1218.	-16991.	-41922.
	(-49868.)										(-36728.)
4	-38761.	-25903.	-15736.	-8309.	-2441.	1866.	4613.	5799.	5426.	3493.	0.
	(-34169.)										

0HORIZONTAL MEMBER STRESSES FOR DL+LL MAX NEG BOTTOM FIBER

0 1	0.	-369.	-623.	-764.	-790.	-701.	-498.	-181.	261.	891.	1184.
0 2	1162.	863.	282.	-96.	-328.	-425.	-388.	-217.	107.	638.	954.
0 3	966.	707.	205.	-131.	-346.	-447.	-433.	-299.	-30.	424.	711.
0 4	662.	581.	392.	207.	61.	-47.	-115.	-145.	-135.	-87.	0.

0HORIZONTAL MEMBER STRESSES FOR DL+LL MAX NEG TOP FIBER

0 1	0.	319.	540.	661.	684.	607.	432.	157.	-226.	-771.	-1302.
0 2	-1278.	-747.	-244.	83.	284.	368.	336.	188.	-93.	-552.	-1049.
0 3	-1062.	-612.	-177.	113.	300.	387.	375.	259.	26.	-367.	-782.
0 4	-728.	-556.	-340.	-179.	-53.	40.	100.	125.	117.	75.	0.

1ACCOUNT: CALTRANS BDS-VERSION 3.00 REL-10 05/10/92, JAN. 05, 1994 PAGE 21

D I V I S I O N O F S T R U C T U R E S – C A L T R A N S

AN BRIDGE DESIGN PRACTICE EXAMPLE

0LL NO. 1. POSITIVE LIVE LOAD MOMENT ENVELOPE AND ASSOCIATED SHEARS

0MEM NO	LEFT	.1 PT	.2 PT	.3 PT	.4 PT	.5 PT	.6 PT	.7 PT	.8 PT	.9 PT	RIGHT
1	0.	6162.	10293.	12595.	13387.	12881.	11172.	8368.	4854.	1707.	968.
SHEAR	0.0	513.5	428.9	304.5	226.3	-310.4	-381.5	-445.3	-500.5	-213.9	8.1
2	1565.	1981.	5566.	8700.	10652.	11194.	10554.	8514.	5338.	2398.	2266.
SHEAR	-49.3	196.6	459.6	386.5	307.3	-232.1	-313.6	-392.2	-464.2	-174.6	48.0
3	1765.	2395.	5176.	7989.	9637.	9980.	9204.	7164.	4164.	2001.	2242.
SHEAR	-24.6	204.9	453.3	377.1	295.4	-242.9	-325.7	-404.6	-475.5	-158.3	68.8
4	1417.	1639.	2755.	4823.	6377.	7202.	7422.	6938.	5735.	3455.	0.
SHEAR	-20.2	197.6	532.3	433.2	365.1	-329.8	-226.3	-304.5	-409.7	-493.5	0.0

0HORIZONTAL MEMBER STRESSES LL MAX POS BOTTOM FIBER

0 1	0.	-154.	-257.	-314.	-334.	-321.	-279.	-209.	-121.	-43.	-19.
0 2	-30.	-49.	-139.	-217.	-266.	-279.	-263.	-212.	-133.	-60.	-44.
0 3	-34.	-60.	-129.	-199.	-240.	-249.	-230.	-179.	-104.	-50.	-43.
0 4	-27.	-37.	-69.	-120.	-159.	-180.	-185.	-173.	-143.	-86.	0.

0HORIZONTAL MEMBER STRESSES LL MAX POS TOP FIBER

0 1	0.	133.	222.	272.	289.	278.	241.	181.	105.	37.	21.
0 2	33.	43.	120.	188.	230.	242.	228.	184.	115.	52.	48.
0 3	38.	52.	112.	173.	208.	216.	199.	155.	90.	43.	48.
0 4	30.	35.	59.	104.	138.	156.	160.	150.	124.	75.	0.

1ACCOUNT: CALTRANS BDS-VERSION 3.00 REL-10 05/10/92, JAN. 05, 1994 PAGE 22

D I V I S I O N O F S T R U C T U R E S – C A L T R A N S

AN BRIDGE DESIGN PRACTICE EXAMPLE

0LL NO. 1. DEAD LOAD PLUS POSITIVE LIVE LOAD MOMENT ENVELOPE

0MEM NO	LEFT	.1 PT	.2 PT	.3 PT	.4 PT	.5 PT	.6 PT	.7 PT	.8 PT	.9 PT	RIGHT
1	0.	21468.	36321.	44759.	47103.	43563.	34237.	19231.	-1069.	-25587.	-52407.
											(-46819.)
2	-50245.	-24493.	-1084.	16496.	27511.	31737.	29400.	20282.	4648.	-16132.	-39613.
	(-45293.)										(-35097.)
3	-41161.	-18595.	1413.	16870.	26576.	30393.	28507.	20771.	7491.	-9537.	-28869.
	(-36460.)										(-24842.)
4	-28194.	-17890.	-8356.	562.	7405.	11958.	14347.	14472.	12318.	7526.	0.
	(-24514.)										

0HORIZONTAL MEMBER STRESSES FOR DL+LL MAX POS BOTTOM FIBER

0 1	0.	-535.	-906.	-1116.	-1175.	-1086.	-854.	-480.	27.	638.	907.
0 2	877.	611.	27.	-411.	-686.	-791.	-733.	-506.	-116.	402.	680.
0 3	706.	464.	-35.	-421.	-663.	-758.	-711.	-518.	-187.	238.	481.
0 4	475.	401.	208.	-14.	-185.	-298.	-358.	-361.	-307.	-188.	0.

0HORIZONTAL MEMBER STRESSES FOR DL+LL MAX POS TOP FIBER

0 1	0.	464.	784.	967.	1017.	941.	739.	415.	-23.	-553.	-997.
0 2	-964.	-529.	-23.	356.	594.	685.	635.	438.	100.	-348.	-747.
0 3	-776.	-402.	31.	364.	574.	656.	616.	449.	162.	-206.	-529.
0 4	-522.	-384.	-180.	12.	160.	258.	310.	313.	266.	163.	0.

1ACCOUNT: CALTRANS BDS-VERSION 3.00 REL-10 05/10/92, JAN. 05, 1994 PAGE 23

D I V I S I O N O F S T R U C T U R E S – C A L T R A N S

AN BRIDGE DESIGN PRACTICE EXAMPLE

0LL NO. 1. LIVE LOAD SHEAR ENVELOPES AND ASSOCIATED MOMENTS

0MEMBER	1 LEFT	.1 PT	.2 PT	.3 PT	.4 PT	.5 PT	.6 PT	.7 PT	.8 PT	.9 PT	RIGHT
0POS. V	600.4	513.5	428.9	347.9	271.7	201.8	139.3	85.6	41.9	17.8	8.3
MOM.	0.	6162.	10293.	12523.	13043.	12107.	10031.	7192.	4023.	332.	642.
NEG. V	-47.2	-68.0	-113.4	-193.3	-276.5	-355.5	-429.1	-495.8	-554.6	-606.2	-687.0
MOM.	0.	3435.	6578.	10874.	12587.	12553.	11017.	8284.	4721.	-3136.	-10658.
RANGE	647.7	581.5	542.3	541.2	548.2	557.3	568.4	581.5	596.5	624.0	695.3

0LL NO. 1. LIVE LOAD SHEAR ENVELOPES AND ASSOCIATED MOMENTS

0MEMBER	2 LEFT	.1 PT	.2 PT	.3 PT	.4 PT	.5 PT	.6 PT	.7 PT	.8 PT	.9 PT	RIGHT
0POS. V	669.2	578.8	508.4	432.6	352.1	270.8	192.5	134.9	94.3	73.9	71.7
MOM.	-10525.	-3251.	5456.	8563.	10401.	10787.	9744.	3848.	2337.	4070.	1732.
NEG. V	-50.9	-53.4	-81.0	-125.6	-198.1	-277.0	-358.5	-438.6	-513.4	-579.0	-658.9
MOM.	1038.	2953.	4870.	7661.	9857.	10806.	10310.	8376.	5213.	1233.	-9553.
RANGE	720.2	632.2	589.4	558.3	550.2	547.8	551.0	573.5	607.7	653.0	730.6

0LL NO. 1. LIVE LOAD SHEAR ENVELOPES AND ASSOCIATED MOMENTS

0MEMBER	3 LEFT	.1 PT	.2 PT	.3 PT	.4 PT	.5 PT	.6 PT	.7 PT	.8 PT	.9 PT	RIGHT
0POS. V	637.0	569.9	499.2	420.4	337.6	255.2	177.5	128.6	90.9	77.2	75.5
MOM.	-9200.	1407.	5090.	7857.	9380.	9534.	3915.	2538.	1348.	3917.	1629.
NEG. V	-36.2	-44.2	-75.2	-129.3	-204.2	-285.3	-368.4	-449.3	-523.8	-587.6	-636.8
MOM.	1397.	3136.	5317.	6968.	8897.	9621.	8984.	7029.	4001.	351.	-3289.
RANGE	673.1	614.1	574.4	549.7	541.8	540.5	545.9	577.8	614.7	664.8	712.3

0LL NO. 1. LIVE LOAD SHEAR ENVELOPES AND ASSOCIATED MOMENTS

0MEMBER	4 LEFT	.1 PT	.2 PT	.3 PT	.4 PT	.5 PT	.6 PT	.7 PT	.8 PT	.9 PT	RIGHT
0POS. V	638.8	590.1	532.3	466.6	394.0	315.8	233.1	179.4	134.6	94.3	89.9
MOM.	-2382.	276.	2755.	4818.	6248.	6859.	6499.	4274.	3224.	1757.	0.
NEG. V	-22.2	-28.8	-49.1	-76.0	-126.4	-187.0	-255.2	-329.8	-409.7	-493.5	-580.2
MOM.	1030.	1812.	2749.	3726.	5311.	6547.	7146.	6926.	5735.	3455.	0.
RANGE	661.0	618.8	581.4	542.6	520.4	502.8	488.3	509.3	544.3	587.9	670.1

1ACCOUNT: CALTRANS BDS-VERSION 3.00 REL-10 05/10/92, JAN. 05, 1994 PAGE 24

D I V I S I O N O F S T R U C T U R E S – C A L T R A N S

AN BRIDGE DESIGN PRACTICE EXAMPLE

0LL NO. 1. DEAD LOAD PLUS LIVE LOAD SHEAR ENVELOPE

0MEMBER	1 LEFT	.1 PT	.2 PT	.3 PT	.4 PT	.5 PT	.6 PT	.7 PT	.8 PT	.9 PT	RIGHT
0POS. V	2067.0	1598.0	1131.3	668.2	210.0	-242.0	-686.5	-1122.3	-1548.0	-1954.2	-2375.7
NEG. V	1419.3	1016.5	589.0	127.0	-338.2	-799.3	-1254.9	-1703.7	-2144.5	-2578.2	-3071.1

0LL NO. 1. DEAD LOAD PLUS LIVE LOAD SHEAR ENVELOPE

0MEMBER	2 LEFT	.1 PT	.2 PT	.3 PT	.4 PT	.5 PT	.6 PT	.7 PT	.8 PT	.9 PT	RIGHT
0POS. V	2845.6	2310.8	1826.4	1336.8	842.4	347.1	-145.0	-616.5	-1071.0	-1505.3	-1951.9
NEG. V	2125.4	1678.6	1237.1	778.5	292.2	-200.6	-696.0	-1190.0	-1678.7	-2158.2	-2682.5

0LL NO. 1. DEAD LOAD PLUS LIVE LOAD SHEAR ENVELOPE

0MEMBER	3 LEFT	.1 PT	.2 PT	.3 PT	.4 PT	.5 PT	.6 PT	.7 PT	.8 PT	.9 PT	RIGHT
0POS. V	2675.7	2196.6	1743.8	1282.9	818.2	353.7	-106.1	-537.1	-956.8	-1352.5	-1766.4
NEG. V	2002.6	1582.5	1169.5	733.3	276.4	-186.8	-652.0	-1114.9	-1571.5	-2017.4	-2478.6

0LL NO. 1. DEAD LOAD PLUS LIVE LOAD SHEAR ENVELOPE

0MEMBER	4 LEFT	.1 PT	.2 PT	.3 PT	.4 PT	.5 PT	.6 PT	.7 PT	.8 PT	.9 PT	RIGHT
0POS. V	2204.5	1908.1	1622.2	1333.6	1038.1	737.0	431.5	155.0	-112.7	-375.9	-603.2
NEG. V	1543.5	1289.2	1040.8	790.9	517.7	234.2	-56.8	-354.3	-657.0	-963.7	-1273.3

1ACCOUNT: CALTRANS BDS-VERSION 3.00 REL-10 05/10/92, JAN. 05, 1994 PAGE 25

D I V I S I O N O F S T R U C T U R E S – C A L T R A N S
AN BRIDGE DESIGN PRACTICE EXAMPLE

0LL NO. 1.

LIVE LOAD SUPPORT RESULTS

0	MAX. AXIAL LOAD			MAX. LONGITUDINAL MOMENT		
	AXIAL LOAD	MOMENT TOP	MOMENT BOT.	AXIAL LOAD	MOMENT TOP	MOMENT BOT.
0SUPPORT JT. 1						
POSITIVE	77.8	0.	0.	0.0	0.	0.
NEGATIVE	-6.1	0.	0.	0.0	0.	0.
0MEMBER 5						
POSITIVE	144.7	17.	-9.	72.5	485.	-242.
NEGATIVE	-7.7	80.	-40.	61.6	-411.	205.
0MEMBER 6						
POSITIVE	136.9	46.	-23.	70.4	361.	-181.
NEGATIVE	-13.3	-75.	37.	56.3	-350.	175.
0MEMBER 7						
POSITIVE	123.4	183.	-92.	68.9	436.	-218.
NEGATIVE	-12.7	-117.	59.	64.3	-296.	148.
0SUPPORT JT. 5						
POSITIVE	75.2	0.	0.	0.0	0.	0.
NEGATIVE	-11.6	0.	0.	0.0	0.	0.

0 THE RATIO OF SUBSTRUCTURE / SUPERSTRUCTURE LOADING IS 0.130

```
1ACCOUNT:                          CALTRANS BDS-VERSION 3.00  REL-10  05/10/92,    JAN. 05, 1994 PAGE  26

                        D I V I S I O N   O F   S T R U C T U R E S  -  C A L T R A N S
                     AN BRIDGE DESIGN PRACTICE EXAMPLE
0LIVE LOAD DIAGNOSTICS

0          NO ERRORS FOUND
0LIVE LOAD GENERATOR                    PERMIT LIVE LOADING
0           NUMBER OF LIVE LOAD LANES          RESISTING MOMENT OF        PLOT   PLOT   INFLU-
 MEM     SUPERSTRUCTURE   SUBSTRUCTURE              UNIT STEEL            M   S SCALE   ENCE
  NO.   LT.END   RT.END   LT.END    RT.END     POSITIVE   NEGATIVE         ENV.         LINES   GEN
 ____________________________________________

   1      7.714   7.714    1.0       1.0          0.         0.            0      0      NO      YES
   2      7.714   7.714    1.0       1.0          0.         0.
   3      7.714   7.714    1.0       1.0          0.         0.
   4      7.714   7.714    1.0       1.0          0.         0.
0 LIVE
  LOAD              — TRUCK OR TRAIN LOADING  —                    OVER  RRL IMPACT COMB  CARD
  NO    P1   D1    P2   D2    P3   D3    P4   D4    P5   D5   P6    D6   LOAD                CONTROL
  4.    26.0 18.0  48.0 18.0  48.0 18.0  48.0 18.0  48.0 18.0  48.0 18.0   7.       YES
0       P7   D7    P8   D8    P9   D9    P10  D10   P11  D11  P12   D12
        48.0  0.0   0.0  0.0   0.0  0.0   0.0  0.0   0.0  0.0   0.0  0.0
0       P13  D13   P14  D14   P15  D15   P16  D16   P17  D17  P18   D18
         0.0  0.0   0.0  0.0   0.0  0.0   0.0  0.0   0.0  0.0   0.0  0.0
0       P19  D19   P20  D20   P21  D21   P22  D22   P23  D23  P24   D24
         0.0  0.0   0.0  0.0   0.0  0.0   0.0  0.0   0.0  0.0   0.0  0.0
0       P25  D25   P26  D26   P27  D27   P28  D28   P29  D29  P30   D30
         0.0  0.0   0.0  0.0   0.0  0.0   0.0  0.0   0.0  0.0   0.0  0.0
0       P31  D31   P32  D32   P33  D33   P34  D34   P35  D35  P36   D36
         0.0  0.0   0.0  0.0   0.0  0.0   0.0  0.0   0.0  0.0   0.0  0.0
0       P37  D37   P38  D38   P39  D39   P40  D40   P41  D41  P42   D42
         0.0  0.0   0.0  0.0   0.0  0.0   0.0  0.0   0.0  0.0   0.0  0.0
```

Continued on next page

Continued from previous page

```
1ACCOUNT:
          0.0  0.0   0.0  0.0   0.0  0.0   0.0  0.0   0.0  0.0   0.0  0.0
0        P49  D49   P50  D50   P51  D51   P52  D52   P53  D53   P54  D54
          0.0  0.0   0.0  0.0   0.0  0.0   0.0  0.0   0.0  0.0   0.0  0.0
0        P55  D55   P56  D56   P57  D57   P58  D58   P59  D59   P60  D60
          0.0  0.0   0.0  0.0   0.0  0.0   0.0  0.0   0.0  0.0   0.0  0.0
0        P61  D61   P62  D62   P63  D63   P64  D64   P65  D65   P66  D66
          0.0  0.0   0.0  0.0   0.0  0.0   0.0  0.0   0.0  0.0   0.0  0.0
0        P67  D67   P68  D68   P69  D69   P70  D70   P71  D71   P72  D72
          0.0  0.0   0.0  0.0   0.0  0.0   0.0  0.0   0.0  0.0   0.0  0.0
0        P73  D73   P74  D74   P75  D75   P76  D76   P77  D77   P78  D78
          0.0  0.0   0.0  0.0   0.0  0.0   0.0  0.0   0.0  0.0   0.0  0.0
0        P79  D79   P80  D80   P81  D81   P82  D82   P83  D83   P84  D84
          0.0  0.0   0.0  0.0   0.0  0.0   0.0  0.0   0.0  0.0   0.0  0.0
0        P85  D85   P86  D86   P87  D87   P88  D88   P89  D89   P90  D90
          0.0  0.0   0.0  0.0   0.0  0.0   0.0  0.0   0.0  0.0   0.0  0.0
0        P91  D91   P92  D92   P93  D93   P94  D94   P95  D95   P96  D96   P97
          0.0  0.0   0.0  0.0   0.0  0.0   0.0  0.0   0.0  0.0   0.0  0.0   0.0


  IMPACT FACTORS CALCULATED BY PROGRAM :
0        MEM        IMPACT
          NO          %


          1          20.4
          2          19.6
          3          20.4
          4          25.6
```

```
1ACCOUNT:                          CALTRANS BDS-VERSION 3.00  REL-10  05/10/92,    JAN. 05, 1994 PAGE  27

                        D I V I S I O N   O F   S T R U C T U R E S  -  C A L T R A N S
                     AN BRIDGE DESIGN PRACTICE EXAMPLE
0LL NO. 4.                   NEGATIVE LIVE LOAD MOMENT ENVELOPE AND ASSOCIATED SHEARS
                       *** SPECIAL TRUCK WITH    7 AXLES WAS REQUESTED THIS LIVE LOAD ***
0MEM    LEFT     .1 PT    .2 PT    .3 PT    .4 PT    .5 PT    .6 PT    .7 PT    .8 PT    .9 PT    RIGHT
 NO
0 1        0.   -1542.   -3084.   -4626.   -6168.   -7711.   -9253.  -10795.  -12337.  -13879.  -29101.
                                                                                                  (  -25930.)
 SHEAR     0.0   -128.5   -128.5   -128.5   -128.5   -128.5   -128.5   -128.5   -128.5   -128.5  -1646.9
  2   -25259.  -15942.  -13486.  -11030.   -8574.   -6118.   -6313.   -8087.   -9862.  -11637.  -26433.
     (  -23467.)                                                                                  (  -23587.)
 SHEAR  1530.7    188.9    188.9    188.9    188.9    188.9   -136.5   -136.5   -136.5   -136.5  -1542.2
  3   -22944.  -15634.  -13147.  -10660.   -8173.   -5686.   -3199.   -3063.   -3730.   -9913.  -26208.
     (  -21421.)                                                                                  (  -22813.)
 SHEAR  1327.7    207.2    207.2    207.2    207.2    207.2    207.2    -55.6    -55.6  -1136.0  -1482.7
  4   -19581.  -14651.  -13023.  -11395.   -9767.   -8139.   -6511.   -4884.   -3256.   -1628.       0.
     (  -17820.)
 SHEAR  1094.7    232.6    232.6    232.6    232.6    232.6    232.6    232.6    232.6    232.6      0.0
0HORIZONTAL MEMBER STRESSES LL MAX NEG  BOTTOM FIBER
0 1        0.      38.      77.     115.     154.     192.     231.     269.     308.     346.     502.
0 2      455.     398.     336.     275.     214.     153.     157.     202.     246.     290.     457.
0 3      415.     390.     328.     266.     204.     142.      80.      76.      93.     247.     442.
0 4      345.     329.     325.     284.     244.     203.     162.     122.      81.      41.       0.
0HORIZONTAL MEMBER STRESSES LL MAX NEG  TOP FIBER
0 1        0.     -33.     -67.    -100.    -133.    -167.    -200.    -233.    -266.    -300.    -552.
0 2     -500.    -344.    -291.    -238.    -185.    -132.    -136.    -175.    -213.    -251.    -502.
0 3     -456.    -338.    -284.    -230.    -177.    -123.     -69.     -66.     -81.    -214.    -486.
0 4     -379.    -314.    -281.    -246.    -211.    -176.    -141.    -105.     -70.     -35.       0.
```

```
1ACCOUNT:                          CALTRANS BDS-VERSION 3.00  REL-10  05/10/92,    JAN. 05, 1994 PAGE  28

                        D I V I S I O N   O F   S T R U C T U R E S  –  C A L T R A N S
                     AN BRIDGE DESIGN PRACTICE EXAMPLE
0LL NO. 4.                   DEAD LOAD PLUS NEGATIVE LIVE LOAD MOMENT ENVELOPE
                     *** SPECIAL TRUCK WITH    7 AXLES WAS REQUESTED THIS LIVE LOAD ***
0MEM    LEFT    .1 PT    .2 PT    .3 PT    .4 PT    .5 PT    .6 PT    .7 PT    .8 PT    .9 PT    RIGHT
 NO
  1        0.   13764.   22943.   27537.   27547.   22972.   13813.      69.  -18260.  -41174.  -82475.
                                                                                                  ( -73871.)
  2   -77069.  -42416.  -20135.   -3235.    8285.   14425.   12533.    3680.  -10553.  -30167.  -68312.
     ( -70405.)                                                                                   ( -60977.)
  3   -65870.  -36624.  -16910.   -1779.    8766.   14727.   16103.   10544.    -402.  -21451.  -57319.
     ( -59777.)                                                                                   ( -49846.)
  4   -49191.  -34180.  -24133.  -15656.   -8740.   -3383.     414.    2650.    3327.    2443.       0.
     ( -43830.)
0HORIZONTAL MEMBER STRESSES FOR DL+LL MAX NEG BOTTOM FIBER
0 1        0.    -343.    -572.    -687.    -687.    -573.    -344.      -2.     455.    1027.    1431.
0 2     1364.    1058.     502.      81.    -207.    -360.    -313.     -92.     263.     752.    1181.
0 3     1158.     913.     422.      44.    -219.    -367.    -402.    -263.      10.     535.     965.
0 4      849.     767.     602.     390.     218.      84.     -10.     -66.     -83.     -61.       0.
0HORIZONTAL MEMBER STRESSES FOR DL+LL MAX NEG  TOP FIBER
0 1        0.     297.     495.     595.     595.     496.     298.       1.    -394.    -889.   -1573.
0 2    -1499.    -916.    -435.     -70.     179.     312.     271.      79.    -228.    -651.   -1298.
0 3    -1273.    -791.    -365.     -38.     189.     318.     348.     228.      -9.    -463.   -1061.
0 4     -933.    -733.    -521.    -338.    -189.     -73.       9.      57.      72.      53.       0.
```

1ACCOUNT: CALTRANS BDS-VERSION 3.00 REL-10 05/10/92, JAN. 05, 1994 PAGE 29

D I V I S I O N O F S T R U C T U R E S – C A L T R A N S

AN BRIDGE DESIGN PRACTICE EXAMPLE

0LL NO. 4. POSITIVE LIVE LOAD MOMENT ENVELOPE AND ASSOCIATED SHEARS

*** SPECIAL TRUCK WITH 7 AXLES WAS REQUESTED THIS LIVE LOAD ***

0MEM NO	LEFT	.1 PT	.2 PT	.3 PT	.4 PT	.5 PT	.6 PT	.7 PT	.8 PT	.9 PT	RIGHT
1	0.	14018.	23540.	29134.	31996.	30762.	26167.	17874.	6355.	2413.	2682.
SHEAR	0.0	1168.2	869.4	586.4	276.5	-468.1	-751.2	-1061.0	-1342.1	22.3	22.3
2	4336.	2561.	8758.	18632.	24811.	26619.	24541.	18098.	7952.	3707.	6163.
SHEAR	-136.5	-136.5	1155.5	850.4	527.3	-242.5	-547.9	-870.9	-1175.7	188.9	188.9
3	4250.	3667.	8049.	16165.	21122.	22231.	19984.	13966.	4693.	4261.	6748.
SHEAR	-48.6	-48.6	1062.7	774.8	470.0	-274.8	-562.7	-867.5	-1155.0	207.2	207.2
4	4266.	3840.	3615.	7611.	10601.	11726.	12464.	11230.	9006.	5764.	0.
SHEAR	-60.9	-60.9	899.1	727.6	545.1	356.1	-279.0	-468.3	-643.3	-823.4	0.0

0HORIZONTAL MEMBER STRESSES LL MAX POS BOTTOM FIBER

0 1	0.	-350.	-587.	-727.	-798.	-767.	-653.	-446.	-158.	-60.	-52.
0 2	-84.	-64.	-218.	-465.	-619.	-664.	-612.	-451.	-198.	-92.	-119.
0 3	-82.	-91.	-201.	-403.	-527.	-554.	-498.	-348.	-117.	-106.	-131.
0 4	-83.	-86.	-90.	-190.	-264.	-292.	-311.	-280.	-225.	-144.	0.

0HORIZONTAL MEMBER STRESSES LL MAX POS TOP FIBER

0 1	0.	303.	508.	629.	691.	664.	565.	386.	137.	52.	57.
0 2	92.	55.	189.	402.	536.	575.	530.	391.	172.	80.	131.
0 3	90.	79.	174.	349.	456.	480.	432.	302.	101.	92.	144.
0 4	91.	82.	78.	164.	229.	253.	269.	243.	194.	124.	0.

1ACCOUNT: CALTRANS BDS-VERSION 3.00 REL-10 05/10/92, JAN. 05, 1994 PAGE 30

D I V I S I O N O F S T R U C T U R E S – C A L T R A N S

AN BRIDGE DESIGN PRACTICE EXAMPLE

0LL NO. 4. DEAD LOAD PLUS POSITIVE LIVE LOAD MOMENT ENVELOPE

*** SPECIAL TRUCK WITH 7 AXLES WAS REQUESTED THIS LIVE LOAD ***

0MEM NO	LEFT	.1 PT	.2 PT	.3 PT	.4 PT	.5 PT	.6 PT	.7 PT	.8 PT	.9 PT	RIGHT
1	0.	29324.	49567.	61298.	65712.	61445.	49233.	28738.	432.	-24881.	-50693.
											(-45315.)
2	-47474.	-23913.	2109.	26427.	41671.	47162.	43386.	29865.	7261.	-14823.	-35717.
	(-42943.)										(-31699.)
3	-38676.	-17323.	4287.	25046.	38062.	42644.	39286.	27573.	8020.	-7276.	-24363.
	(-34228.)										(-20803.)
4	-25345.	-15689.	-7496.	3349.	11629.	16483.	19390.	18764.	15588.	9835.	0.
	(-21896.)										

0HORIZONTAL MEMBER STRESSES FOR DL+LL MAX POS BOTTOM FIBER

0 1	0.	-731.	-1236.	-1529.	-1639.	-1532.	-1228.	-717.	-11.	620.	878.
0 2	832.	596.	-53.	-659.	-1039.	-1176.	-1082.	-745.	-181.	370.	614.
0 3	663.	432.	-107.	-625.	-949.	-1063.	-980.	-688.	-200.	181.	403.
0 4	424.	352.	187.	-84.	-290.	-411.	-484.	-468.	-389.	-245.	0.

0HORIZONTAL MEMBER STRESSES FOR DL+LL MAX POS TOP FIBER

0 1	0.	633.	1070.	1324.	1419.	1327.	1063.	621.	9.	-537.	-965.
0 2	-914.	-516.	46.	571.	900.	1019.	937.	645.	157.	-320.	-675.
0 3	-729.	-374.	93.	541.	822.	921.	848.	595.	173.	-157.	-443.
0 4	-466.	-337.	-162.	72.	251.	356.	419.	405.	337.	212.	0.

1ACCOUNT: CALTRANS BDS-VERSION 3.00 REL-10 05/10/92, JAN. 05, 1994 PAGE 31

D I V I S I O N O F S T R U C T U R E S – C A L T R A N S

AN BRIDGE DESIGN PRACTICE EXAMPLE

0LL NO. 4. LIVE LOAD SHEAR ENVELOPES AND ASSOCIATED MOMENTS

*** SPECIAL TRUCK WITH 7 AXLES WAS REQUESTED THIS LIVE LOAD ***

0MEMBER	1 LEFT	.1 PT	.2 PT	.3 PT	.4 PT	.5 PT	.6 PT	.7 PT	.8 PT	.9 PT	RIGHT
0POS. V	1468.8	1168.2	895.5	654.4	446.4	272.6	133.1	26.4	22.3	22.3	22.3
MOM.	0.	14018.	21493.	23557.	21425.	16357.	9581.	2219.	2145.	2413.	2682.
NEG. V	-128.5	-128.5	-146.2	-260.9	-430.5	-623.1	-835.7	-1094.1	-1364.8	-1646.9	-1925.8
MOM.	0.	-1542.	9866.	14683.	19460.	21462.	20080.	15094.	5409.	-9338.	-27566.
RANGE	1597.3	1296.7	1041.7	915.3	876.9	895.8	968.8	1120.6	1387.1	1669.2	1948.1

0LL NO. 4. LIVE LOAD SHEAR ENVELOPES AND ASSOCIATED MOMENTS

*** SPECIAL TRUCK WITH 7 AXLES WAS REQUESTED THIS LIVE LOAD ***

0MEMBER	2 LEFT	.1 PT	.2 PT	.3 PT	.4 PT	.5 PT	.6 PT	.7 PT	.8 PT	.9 PT	RIGHT
0POS. V	1781.0	1482.6	1182.9	896.0	633.7	404.9	215.3	188.9	188.9	188.9	188.9
MOM.	-23683.	-5634.	7492.	15223.	17798.	16035.	11125.	-1205.	1251.	3707.	6163.
NEG. V	-136.5	-136.5	-136.5	-136.5	-206.8	-406.9	-644.1	-912.4	-1202.7	-1503.2	-1800.1
MOM.	4336.	2561.	787.	-988.	10585.	15822.	17591.	14794.	6732.	-6712.	-24948.
RANGE	1917.5	1619.1	1319.4	1032.5	840.4	811.8	859.4	1101.4	1391.6	1692.1	1989.0

0LL NO. 4. LIVE LOAD SHEAR ENVELOPES AND ASSOCIATED MOMENTS

*** SPECIAL TRUCK WITH 7 AXLES WAS REQUESTED THIS LIVE LOAD ***

0MEMBER	3 LEFT	.1 PT	.2 PT	.3 PT	.4 PT	.5 PT	.6 PT	.7 PT	.8 PT	.9 PT	RIGHT
0POS. V	1658.8	1368.1	1074.2	806.9	569.6	369.3	211.1	207.2	207.2	207.2	207.2
MOM.	-20503.	-4311.	7144.	13331.	15224.	13749.	10135.	-713.	1774.	4261.	6748.
NEG. V	-55.6	-55.6	-55.6	-55.6	-186.6	-382.0	-614.0	-876.5	-1166.5	-1458.8	-1744.7
MOM.	1605.	938.	271.	-396.	8521.	13025.	14366.	11566.	4313.	-8649.	-24824.
RANGE	1714.3	1423.7	1129.8	862.5	756.2	751.3	825.2	1083.7	1373.7	1666.0	1951.9

0LL NO. 4. LIVE LOAD SHEAR ENVELOPES AND ASSOCIATED MOMENTS

*** SPECIAL TRUCK WITH 7 AXLES WAS REQUESTED THIS LIVE LOAD ***

0MEMBER	4 LEFT	.1 PT	.2 PT	.3 PT	.4 PT	.5 PT	.6 PT	.7 PT	.8 PT	.9 PT	RIGHT
0POS. V	1389.4	1198.6	1021.9	845.7	646.9	484.0	316.1	232.6	232.6	232.6	232.6
MOM.	-17241.	-8520.	-4191.	1828.	5047.	7252.	8827.	-4884.	-3256.	-1628.	0.
NEG. V	-60.9	-60.9	-60.9	-60.9	-60.9	-109.1	-279.0	-468.3	-643.3	-823.4	-1019.0
MOM.	4266.	3840.	3413.	2986.	2560.	11726.	12464.	11230.	9006.	5764.	0.
RANGE	1450.3	1259.5	1082.8	906.6	707.8	593.0	595.1	700.9	875.8	1056.0	1251.5

1ACCOUNT: CALTRANS BDS-VERSION 3.00 REL-10 05/10/92, JAN. 05, 1994 PAGE 32

D I V I S I O N O F S T R U C T U R E S – C A L T R A N S

AN BRIDGE DESIGN PRACTICE EXAMPLE

0LL NO. 4. DEAD LOAD PLUS LIVE LOAD SHEAR ENVELOPE

*** SPECIAL TRUCK WITH 7 AXLES WAS REQUESTED THIS LIVE LOAD ***

0MEMBER	1 LEFT	.1 PT	.2 PT	.3 PT	.4 PT	.5 PT	.6 PT	.7 PT	.8 PT	.9 PT	RIGHT
0POS. V	2935.3	2252.6	1597.9	974.7	384.7	-171.1	-692.7	-1181.5	-1567.6	-1949.6	-2361.7
NEG. V	1338.0	956.0	556.2	59.4	-492.2	-1066.9	-1661.5	-2302.0	-2954.7	-3618.9	-4309.8

0LL NO. 4. DEAD LOAD PLUS LIVE LOAD SHEAR ENVELOPE

*** SPECIAL TRUCK WITH 7 AXLES WAS REQUESTED THIS LIVE LOAD ***

0MEMBER	2 LEFT	.1 PT	.2 PT	.3 PT	.4 PT	.5 PT	.6 PT	.7 PT	.8 PT	.9 PT	RIGHT
0POS. V	3957.3	3214.6	2501.0	1800.2	1124.0	481.3	-122.2	-562.5	-976.4	-1390.3	-1834.7
NEG. V	2039.8	1595.4	1181.5	767.6	283.5	-330.5	-981.7	-1663.8	-2368.0	-3082.4	-3823.7

0LL NO. 4. DEAD LOAD PLUS LIVE LOAD SHEAR ENVELOPE

*** SPECIAL TRUCK WITH 7 AXLES WAS REQUESTED THIS LIVE LOAD ***

0MEMBER	3 LEFT	.1 PT	.2 PT	.3 PT	.4 PT	.5 PT	.6 PT	.7 PT	.8 PT	.9 PT	RIGHT
0POS. V	3697.5	2994.8	2318.8	1669.5	1050.1	467.8	-72.5	-458.4	-840.5	-1222.5	-1634.6
NEG. V	1983.2	1571.1	1189.1	807.0	293.9	-283.5	-897.6	-1542.1	-2214.2	-2888.6	-3586.6

0LL NO. 4. DEAD LOAD PLUS LIVE LOAD SHEAR ENVELOPE

*** SPECIAL TRUCK WITH 7 AXLES WAS REQUESTED THIS LIVE LOAD ***

0MEMBER	4 LEFT	.1 PT	.2 PT	.3 PT	.4 PT	.5 PT	.6 PT	.7 PT	.8 PT	.9 PT	RIGHT
0POS. V	2955.1	2516.6	2111.7	1712.6	1291.0	905.2	514.5	208.1	-14.8	-237.7	-460.5
NEG. V	1504.8	1257.1	1028.9	806.0	583.2	312.2	-80.6	-492.8	-890.6	-1293.6	-1712.1

```
1ACCOUNT:                          CALTRANS BDS-VERSION 3.00  REL-10  05/10/92,    JAN. 05, 1994 PAGE  33

                        D I V I S I O N   O F   S T R U C T U R E S  –  C A L T R A N S
                     AN BRIDGE DESIGN PRACTICE EXAMPLE

                      *** SPECIAL TRUCK WITH    7 AXLES WAS REQUESTED THIS LIVE LOAD ***
0LL NO. 4.                        LIVE LOAD SUPPORT RESULTS
0                        MAX.  AXIAL  LOAD                  MAX. LONGITUDINAL MOMENT
                      AXIAL     ——MOMENT——          AXIAL   ——MOMENT——
                      LOAD       TOP        BOT.          LOAD      TOP        BOT.
0SUPPORT JT.  1
          POSITIVE    190.4        0.         0.           0.0        0.         0.
          NEGATIVE    -16.7        0.         0.           0.0        0.         0.
0MEMBER   5
          POSITIVE    334.1      242.      -121.         237.5     1324.      -662.
          NEGATIVE    -20.6      214.      -107.         214.9    -1233.       616.
0MEMBER   6
          POSITIVE    324.3      144.       -72.         227.7     1057.      -529.
          NEGATIVE    -30.8     -248.       124.         194.2     -875.       437.
0MEMBER   7
          POSITIVE    317.0      520.      -260.         218.7     1228.      -614.
          NEGATIVE    -34.8     -322.       161.         141.7     -556.       278.
0SUPPORT JT.  5
          POSITIVE    132.1        0.         0.           0.0        0.         0.
          NEGATIVE    -30.1        0.         0.           0.0        0.         0.
0    THE RATIO OF SUBSTRUCTURE / SUPERSTRUCTURE LOADING IS 0.130
```

```
1ACCOUNT:                          CALTRANS BDS-VERSION 3.00  REL-10  05/10/92,    JAN. 05, 1994 PAGE  34

                    D I V I S I O N   O F   S T R U C T U R E S  -  C A L T R A N S
                 AN BRIDGE DESIGN PRACTICE EXAMPLE


0     PRESTRESS COMBINATION DATA

0     NO PRESTRESS COMBINATION DATA GIVEN SO DEFAULTS WERE USED.
0     LIVE LOAD NUMBER '1' RESULTS USED FOR P/S DESIGN AND OTHER LIVE LOADS, IF PRESENTED,
      ALSO WILL BE CHECKED TO DETERMINE THE ULTIMATE MOMENT CAPACITY.


0     THE FOLLOWING VALUES ARE BEING USED IN THE CALCULATION OF MOMENT & SHEAR REQUIREMENTS.
0        D.L. LOAD FACTOR: 1.30

         L.L. LOAD FACTOR: 2.17  OR  1.30

         PHI FACTOR FOR SHEAR : 0.90

         PHI FACTOR FOR MOMENT: 0.95


0     LL NO. 1     ULTIMATE MOMENT APPLIED = 1.30 X (DL+ADL) + 2.17 X (LL+I) + 1.00 X (P/S SEC. MOMENT)
0     LL NO. 4     ULTIMATE MOMENT APPLIED = 1.30 X (DL+ADL) + 1.30 X (LL+I) + 1.00 X (P/S SEC. MOMENT)
0     LL NO. 1     ULTIMATE SHEAR APPLIED  = 1.30 X (DL+ADL) + 2.17 X (LL+I) + 1.00 X (P/S SEC. SHEAR)
0     LL NO. 4     ULTIMATE SHEAR APPLIED  = 1.30 X (DL+ADL) + 1.30 X (LL+I) + 1.00 X (P/S SEC. SHEAR)
```

```
1ACCOUNT:                          CALTRANS BDS-VERSION 3.00  REL-10  05/10/92,    JAN. 05, 1994 PAGE  35

                        D I V I S I O N   O F   S T R U C T U R E S  –  C A L T R A N S
                     AN BRIDGE DESIGN PRACTICE EXAMPLE
0INPUT PRESTRESSED DATA
0TRIAL 10    FRAME 1    PATH 1A
0      MEM
       NO.     LLT/X     LLP/Y   LRT/Z       YLT/TYPE   YLP/SLOPE  YRT       U        K
0        1      0.00      0.40    0.10        2.63       4.25       1.17    0.200    0.00000
0        2      0.10      0.50    0.10        1.17       4.25       1.17    0.200    0.00000
0        3      0.10      0.50    0.10        1.17       4.25       1.17    0.200    0.00000
0        4      0.10      0.60    0.00        1.17       3.00       2.63    0.200    0.00000

0XLT(FT) =   0.0  XRT(FT) =   0.0  STEEL STRESS(KSI) = 270.  JACKING % = 0.75  JACKING ENDS = L
0ANCHOR SET(IN); LEFT = 0.375  RIGHT = 0.000  CONC. STRENGTH(PSI) = 4000.  ALLOW. TENSION(PSI) = -379.
0P-JACK(KIPS) =      0.   SHORTENING PERCENT= 100   TOTAL LOSSES(KSI) = 20   RELATIVE HUMIDITY % = 70.
0LOW-LAX = YES   PLOT PATHS = YES   PLOT STRESSES = YES
```

1ACCOUNT: CALTRANS BDS-VERSION 3.00 REL-10 05/10/92, JAN. 05, 1994 PAGE 36

D I V I S I O N O F S T R U C T U R E S – C A L T R A N S

AN BRIDGE DESIGN PRACTICE EXAMPLE

0CABLE PATH OFFSETS

0TRIAL 10 FRAME 1 PATH 1A

0MEMBER	LEFT	.1 PT	.2 PT	.3 PT	.4 PT	.5 PT	.6 PT	.7 PT	.8 PT	.9 PT	RIGHT
0 1	2.63	3.34	3.85	4.15	4.25	4.15	3.84	3.33	2.61	1.68	1.17
0 2	1.17	1.79	2.86	3.63	4.10	4.25	4.10	3.63	2.86	1.79	1.17
0 3	1.17	1.79	2.86	3.63	4.10	4.25	4.10	3.63	2.86	1.79	1.17
0 4	1.17	1.47	2.02	2.45	2.76	2.94	3.00	2.98	2.91	2.79	2.63

0CABLE PATH ECCENTRICITIES

0 1	0.193	0.902	1.408	1.712	1.813	1.711	1.403	0.889	0.171	-0.753	-1.579
0 2	-1.579	-0.651	0.427	1.197	1.659	1.813	1.659	1.197	0.427	-0.651	-1.579
0 3	-1.579	-0.651	0.427	1.197	1.659	1.813	1.659	1.197	0.427	-0.651	-1.579
0 4	-1.579	-1.092	-0.413	0.014	0.319	0.502	0.563	0.540	0.471	0.355	0.193

0FORCE COEFFICIENTS

0 1	0.832	0.836	0.839	0.842	0.846	0.848	0.852	0.855	0.858	0.862	0.858
0 2	0.858	0.844	0.839	0.835	0.830	0.826	0.823	0.818	0.814	0.810	0.795
0 3	0.795	0.781	0.776	0.772	0.767	0.763	0.760	0.755	0.751	0.747	0.732
0 4	0.732	0.721	0.717	0.714	0.712	0.709	0.706	0.705	0.704	0.703	0.702

0THE POINT OF NO MOVEMENT FOR PRESTRESSING IS IN SPAN 4, 70.00 FEET FROM THE LEFT END OF THE SPAN

0THE LEFT ANCHOR SET LENGTH IS 113.54 THE RIGHT ANCHOR SET LENGTH IS 0.00

0THE FORCE COEF. AT THE LEFT END IS 0.832 THE FORCE COEF. AT THE RIGHT END IS 0.702

0INITAL FORCE COEFF. AT POINT OF NO MOVEMENT = 0.801

1ACCOUNT: CALTRANS BDS-VERSION 3.00 REL-10 05/10/92, JAN. 05, 1994 PAGE 37

D I V I S I O N O F S T R U C T U R E S – C A L T R A N S

AN BRIDGE DESIGN PRACTICE EXAMPLE

0SECONDARY MOMENT DUE TO MEMBER ROTATION – PJACK = 1

0TRIAL 10 FRAME 1 PATH 1A

FEM'S DUE TO SECONDARY EFFECTS BEFORE BALANCING

	MEMBER	LEFT END	RIGHT END	MEMBER	LEFT END	RIGHT END	MEMBER	LEFT END	RIGHT END
0	1	0.000	0.695	2	0.461	0.487	3	0.426	0.452
0	4	-0.223	0.000						

0 DEM'S DUE TO SECONDARY EFFECTS – UNIT = K-FT

0	1	0.000	0.590	2	0.571	0.462	3	0.519	0.204
0	4	0.126	0.000						

0 DEM'S DUE TO SECONDARY EFFECTS IN COLUMN – UNIT = K-FT

0	5	-0.014	-0.018	6	-0.047	0.057	7	-0.024	-0.078

0P/S MOMENT COEF.

*** SIDESWAY INCLUDED. DEAD LOAD WAS SWAYED. ***

ADJUSTED FOR LOSSES & SECONDARY MOMENTS BUT NO SHORTENING

MEM NO	LEFT	.1 PT	.2 PT	.3 PT	.4 PT	.5 PT	.6 PT	.7 PT	.8 PT	.9 PT	RIGHT
0 1	-0.1610	-0.6949	-1.0637	-1.2653	-1.2977	-1.1562	-0.8407	-0.3476	0.3252	1.1797	1.9445
0 2	1.9261	1.1096	0.1908	-0.4610	-0.8502	-0.9810	-0.8593	-0.4849	0.1361	0.9998	1.7180
0 3	1.7745	0.9956	0.1239	-0.4999	-0.8806	-1.0222	-0.9307	-0.6060	-0.0540	0.7211	1.3599
0 4	1.2819	0.9005	0.3967	0.0779	-0.1518	-0.2932	-0.3474	-0.3432	-0.3063	-0.2372	-0.1358

```
1ACCOUNT:                          CALTRANS BDS-VERSION 3.00  REL-10  05/10/92,    JAN. 05, 1994 PAGE  38

                        D I V I S I O N   O F   S T R U C T U R E S  -  C A L T R A N S
                      AN BRIDGE DESIGN PRACTICE EXAMPLE
0FEMS      DELTAS IN COLUMNS DUE TO SHORTENING - PJACK=1
0TRIAL =10  FRAME =1  PATH =1A
0                   MEM          FEM              FEM              DELTA TOP OF COL.
                     NO        LT. END          RT. END           (POSITIVE TO RIGHT) - UNIT = FT
0                     5       -0.43118823       0.43118823                0.00000162
0                     6       -0.10541439       0.10541427                0.00000049
0                     7        0.33825767      -0.33825749               -0.00000048
```

```
1ACCOUNT:                          CALTRANS BDS-VERSION 3.00  REL-10  05/10/92,    JAN. 05, 1994 PAGE  39

                        D I V I S I O N   O F   S T R U C T U R E S  -  C A L T R A N S
                     AN BRIDGE DESIGN PRACTICE EXAMPLE
0SECONDARY MOMENT DUE TO MEMBER SHORTENING - PJACK = 1
0TRIAL 10    FRAME 1    PATH 1A

0                                  DEM'S DUE TO SECONDARY EFFECTS - UNIT = K-FT
0     1        0.000     -0.145       2          0.195     -0.120     3         -0.028      0.101
0     4       -0.151      0.000
0                                  DEM'S DUE TO SECONDARY EFFECTS IN COLUMN - UNIT = K-FT
0     5       -0.400      0.341       6         -0.146      0.092     7          0.273     -0.252
0P/S MOMENT COEF.
                                ADJUSTED FOR LOSSES & SECONDARY MOMENTS & SHORTENING
 MEM
  NO    LEFT      .1 PT     .2 PT     .3 PT     .4 PT     .5 PT     .6 PT     .7 PT     .8 PT     .9 PT     RIGHT
0 1  -0.1610   -0.7095  -1.0928  -1.3090  -1.3559  -1.2290  -0.9280  -0.4494   0.2088   1.0488   1.7990
0 2   2.1213    1.2733   0.3229  -0.3604  -0.7812  -0.9436  -0.8534  -0.5106   0.0788   0.9110   1.5976
0 3   1.7461    0.9801   0.1215  -0.4894  -0.8571  -0.9857  -0.8812  -0.5435   0.0214   0.8095   1.4614
0 4   1.1310    0.7646   0.2760  -0.0278  -0.2423  -0.3686  -0.4078  -0.3884  -0.3365  -0.2523  -0.1358
0***** POINT OF NO MOVEMENT FOR STRUCTURE SHORTENING IS  62.34 FEET FROM THE LEFT END OF SPAN   3    *****

 ***** INFORMATION PROVIDED ABOVE ALSO CAN BE USED AS AN AID TO DETERMINE THE MOVEMENT RATING "MR".  *****
```

1ACCOUNT: CALTRANS BDS-VERSION 3.00 REL-10 05/10/92, JAN. 05, 1994 PAGE 40

D I V I S I O N O F S T R U C T U R E S – C A L T R A N S

AN BRIDGE DESIGN PRACTICE EXAMPLE

0TRIAL 10 FRAME 1 PATH 1A

0HORIZONTAL MEMBER STRESSES PRESTRESS ONLY BOTTOM FIBER AFTER ALL LOSSES (PSI)

MEM NO	LEFT	.1 PT	.2 PT	.3 PT	.4 PT	.5 PT	.6 PT	.7 PT	.8 PT	.9 PT	RIGHT
0 1	556.	769.	919.	1004.	1024.	977.	863.	681.	430.	109.	-107.
0 2	-204.	12.	374.	635.	794.	854.	817.	683.	453.	131.	-79.
0 3	-123.	87.	415.	647.	786.	832.	790.	658.	438.	132.	-70.
0 4	29.	133.	320.	435.	516.	563.	576.	568.	548.	515.	469.

0HORIZONTAL MEMBER STRESSES PRESTRESS ONLY TOP FIBER AFTER ALL LOSSES (PS1)

0 1	441.	260.	134.	64.	51.	95.	197.	358.	579.	861.	1021.
0 2	1127.	926.	606.	376.	233.	176.	205.	316.	510.	784.	923.
0 3	972.	791.	502.	296.	170.	125.	158.	268.	453.	713.	847.
0 4	738.	651.	518.	415.	342.	298.	284.	290.	306.	334.	372.

1ACCOUNT: CALTRANS BDS-VERSION 3.00 REL-10 05/10/92, JAN. 05, 1994 PAGE 41

D I V I S I O N O F S T R U C T U R E S – C A L T R A N S

AN BRIDGE DESIGN PRACTICE EXAMPLE

0TRIAL 10 FRAME 1 PATH 1A

0HORIZONTAL MEMBER MOMENTS DUE TO P/S

MEM NO	LEFT	.1 PT	.2 PT	.3 PT	.4 PT	.5 PT	.6 PT	.7 PT	.8 PT	.9 PT	RIGHT
0 1	-2483.	-10941.	-16853.	-20186.	-20909.	-18952.	-14311.	-6931.	3221.	16174.	27743.
0 2	32714.	19635.	4980.	-5558.	-12047.	-14551.	-13161.	-7875.	1216.	14048.	24637.
0 3	26927.	15115.	1873.	-7547.	-13217.	-15201.	-13590.	-8381.	331.	12484.	22536.
0 4	17442.	11792.	4256.	-428.	-3737.	-5685.	-6289.	-5990.	-5190.	-3890.	-2094.

0VERTICAL MEMBER MOMENTS DUE TO P/S

MEM NO	LEFT	.1 PT	.2 PT	.3 PT	.4 PT	.5 PT	.6 PT	.7 PT	.8 PT	.9 PT	RIGHT
0 5	-6165.	-5051.	-3938.	-2824.	-1711.	-597.	516.	1630.	2743.	3857.	4971.
0 6	-2245.	-1792.	-1338.	-885.	-431.	22.	476.	930.	1383.	1837.	2290.
0 7	4205.	3275.	2345.	1415.	485.	-444.	-1374.	-2304.	-3234.	-4164.	-5094.

0TANGENTIAL ROTATIONS - RADIANS - CLOCKWISE POSITIVE

	SPAN	LT. END	RT. END	SPAN	LT. END	RT. END	SPAN	LT. END	RT. END
0	1	-0.001975	0.000374	2	0.000374	-0.000016	3	-0.000016	0.000170
0	4	0.000170	0.000330	5	0.000000	0.000374	6	0.000000	-0.000016
0	7	0.000000	0.000170						

0HORIZONTAL MEMBER DEFLECTIONS IN FEET AT 1/ 4 POINTS FROM LEFT END - DOWNWARD POSITIVE

0	MEMBER 1	E= 3600.	0.000	-0.147	-0.178	-0.092	0.000
0	MEMBER 2	E= 3600.	0.000	-0.045	-0.100	-0.058	0.000
0	MEMBER 3	E= 3600.	0.000	-0.056	-0.102	-0.060	0.000
0	MEMBER 4	E= 3600.	0.000	-0.004	-0.014	-0.013	0.000

0VERTICAL MEMBER DEFLECTIONS IN FEET AT 1/ 4 POINTS FROM LEFT END.

0	MEMBER 5	E= 3250.	0.000	0.011	0.036	0.064	0.000
0	MEMBER 6	E= 3250.	0.000	0.005	0.016	0.026	0.000
0	MEMBER 7	E= 3250.	0.000	-0.003	-0.008	-0.013	0.000

MEMBER DEFLECTIONS HAVE BEEN MULTIPLIED BY A CREEP FACTOR OF 3. * * * * *

1ACCOUNT: CALTRANS BDS-VERSION 3.00 REL-10 05/10/92, JAN. 05, 1994 PAGE 42

D I V I S I O N O F S T R U C T U R E S – C A L T R A N S

AN BRIDGE DESIGN PRACTICE EXAMPLE

0TRIAL 10 FRAME 1

0HORIZONTAL MEMBER STRESSES FOR ALL P/S PATHS BEFORE LOSSES BOTTOM FIBER (PSI)

MEM NO	LEFT	.1 PT	.2 PT	.3 PT	.4 PT	.5 PT	.6 PT	.7 PT	.8 PT	.9 PT	RIGHT
0 1	622.	860.	1026.	1120.	1141.	1087.	959.	755.	473.	115.	-169.
0 2	-163.	20.	424.	714.	891.	957.	915.	763.	505.	142.	-129.
0 3	-148.	97.	467.	730.	888.	942.	896.	747.	500.	155.	-44.
0 4	-18.	145.	358.	490.	583.	638.	654.	646.	623.	586.	535.

0HORIZONTAL MEMBER STRESSES FOR ALL P/S PATHS BEFORE LOSSES TOP FIBER (PSI)

0 1	493.	291.	151.	74.	59.	109.	223.	404.	651.	965.	1192.
0 2	1185.	1028.	673.	417.	258.	196.	229.	355.	574.	884.	1082.
0 3	1104.	891.	566.	333.	191.	139.	176.	300.	509.	803.	923.
0 4	894.	746.	595.	477.	394.	343.	326.	332.	350.	381.	424.

1ACCOUNT: CALTRANS BDS-VERSION 3.00 REL-10 05/10/92, JAN. 05, 1994 PAGE 43

D I V I S I O N O F S T R U C T U R E S – C A L T R A N S

AN BRIDGE DESIGN PRACTICE EXAMPLE

0TRIAL 10 FRAME 1

0HORIZONTAL MEMBER STRESSES FOR ALL P/S PATHS AFTER ALL LOSSES BOTTOM FIBER (PSI)

MEM NO	LEFT	.1 PT	.2 PT	.3 PT	.4 PT	.5 PT	.6 PT	.7 PT	.8 PT	.9 PT	RIGHT
0 1	556.	769.	919.	1004.	1024.	977.	863.	681.	430.	109.	-107.
0 2	-204.	12.	374.	635.	794.	854.	817.	683.	453.	131.	-79.
0 3	-123.	87.	415.	647.	786.	832.	790.	658.	438.	132.	-70.
0 4	29.	133.	320.	435.	516.	563.	576.	568.	548.	515.	469.

0 HORIZONTAL MEMBER STRESSES FOR ALL P/S PATHS AFTER ALL LOSSES TOP FIBER (PSI)

0 1	441.	260.	134.	64.	51.	95.	197.	358.	579.	861.	1021.
0 2	1127.	926.	606.	376.	233.	176.	205.	316.	510.	784.	923.
0 3	972.	791.	502.	296.	170.	125.	158.	268.	453.	713.	847.
0 4	738.	651.	518.	415.	342.	298.	284.	290.	306.	334.	372.

1ACCOUNT: CALTRANS BDS-VERSION 3.00 REL-10 05/10/92, JAN. 05, 1994 PAGE 44

D I V I S I O N O F S T R U C T U R E S – C A L T R A N S

AN BRIDGE DESIGN PRACTICE EXAMPLE

0TRIAL 10 FRAME 1

0HORIZONTAL MEMBER STRESSES DL + P/S BEFORE ALL LOSSES BOTTOM FIBER (PSI)

MEM NO	LEFT	.1 PT	.2 PT	.3 PT	.4 PT	.5 PT	.6 PT	.7 PT	.8 PT	.9 PT	RIGHT
0 1	622.	535.	474.	438.	427.	437.	470.	525.	599.	693.	620.
0 2	610.	581.	565.	549.	534.	522.	516.	514.	520.	535.	487.
0 3	483.	542.	547.	542.	529.	510.	487.	459.	429.	399.	401.
0 4	410.	517.	593.	580.	561.	537.	507.	486.	484.	500.	535.

0HORIZONTAL MEMBER STRESSES DL + P/S BEFORE ALL LOSSES TOP FIBER (PSI)

0 1	493.	572.	629.	664.	677.	671.	646.	603.	542.	465.	325.
0 2	336.	542.	551.	560.	568.	573.	575.	571.	562.	544.	406.
0 3	410.	506.	497.	496.	502.	514.	530.	549.	570.	592.	434.
0 4	423.	390.	391.	399.	412.	430.	453.	470.	471.	456.	424.

1ACCOUNT: CALTRANS BDS-VERSION 3.00 REL-10 05/10/92, JAN. 05, 1994 PAGE 45

D I V I S I O N O F S T R U C T U R E S – C A L T R A N S

AN BRIDGE DESIGN PRACTICE EXAMPLE

0TRIAL 10 FRAME 1

0HORIZONTAL MEMBER STRESSES DL + P/S AFTER ALL LOSSES BOTTOM FIBER (PSI)

MEM NO	LEFT	.1 PT	.2 PT	.3 PT	.4 PT	.5 PT	.6 PT	.7 PT	.8 PT	.9 PT	RIGHT
0 1	556.	445.	368.	323.	310.	327.	374.	451.	555.	687.	682.
0 2	569.	573.	515.	469.	437.	419.	418.	433.	468.	523.	537.
0 3	508.	532.	494.	459.	427.	400.	381.	370.	367.	377.	375.
0 4	457.	505.	555.	525.	494.	462.	430.	409.	408.	428.	469.

0HORIZONTAL MEMBER STRESSES DL + P/S AFTER ALL LOSSES TOP FIBER (PSI)

0 1	441.	541.	612.	654.	669.	657.	620.	557.	471.	361.	154.
0 2	278.	440.	484.	519.	542.	553.	550.	532.	497.	445.	247.
0 3	278.	406.	433.	458.	481.	499.	512.	517.	514.	502.	358.
0 4	268.	295.	314.	337.	361.	386.	411.	428.	427.	408.	372.

0HORIZONTAL MEMBER STRESSES DL + ADDED DL + P/S AFTER ALL LOSSES BOTTOM FIBER (PSI)

0 1	556.	388.	270.	202.	183.	211.	288.	410.	577.	789.	821.
0 2	706.	672.	540.	440.	373.	341.	347.	389.	470.	593.	646.
0 3	620.	611.	508.	425.	363.	323.	309.	318.	355.	420.	454.
0 4	533.	571.	597.	541.	490.	444.	404.	380.	383.	413.	469.

0HORIZONTAL MEMBER STRESSES DL + ADDED DL + P/S AFTER ALL LOSSES TOP FIBER (PSI)

0 1	441.	591.	697.	759.	779.	757.	695.	593.	452.	272.	0.
0 2	127.	354.	463.	544.	597.	620.	612.	570.	495.	384.	127.
0 3	155.	337.	420.	487.	536.	566.	575.	562.	525.	464.	271.
0 4	185.	232.	278.	323.	364.	401.	433.	452.	448.	422.	372.

1ACCOUNT: CALTRANS BDS-VERSION 3.00 REL-10 05/10/92, JAN. 05, 1994 PAGE 46

D I V I S I O N O F S T R U C T U R E S – C A L T R A N S
AN BRIDGE DESIGN PRACTICE EXAMPLE

0TRIAL 10 FRAME 1

0HORIZONTAL MEMBER STRESSES DL + ADDED DL + MAX POS LL + I + P/S BOTTOM FIBER (PSI)

MEM NO	LEFT	.1 PT	.2 PT	.3 PT	.4 PT	.5 PT	.6 PT	.7 PT	.8 PT	.9 PT	RIGHT
0 1	556.	234.	13.	-112.	-151.	-110.	9.	201.	456.	747.	800.
0 2	674.	623.	401.	223.	108.	62.	84.	177.	337.	533.	601.
0 3	583.	551.	379.	226.	123.	74.	79.	140.	251.	370.	412.
0 4	504.	534.	528.	421.	331.	265.	219.	207.	240.	327.	469.

0HORIZONTAL MEMBER STRESSES DL + ADDED DL + MAX POS LL + I + P/S TOP FIBER (PSI)

0 1	441.	724.	919.	1031.	1068.	1035.	936.	774.	556.	309.	24.
0 2	162.	397.	583.	732.	827.	862.	839.	754.	610.	436.	176.
0 3	196.	389.	532.	660.	744.	781.	773.	716.	615.	507.	318.
0 4	216.	267.	338.	427.	502.	557.	594.	602.	572.	496.	372.

0HORIZONTAL MEMBER STRESSES DL + ADDED DL + MAX NEG LL + I + P/S BOTTOM FIBER (PSI)

0 1	556.	400.	295.	240.	234.	275.	365.	500.	691.	999.	1077.
0 2	959.	875.	657.	538.	466.	429.	429.	466.	560.	768.	876.
0 3	843.	794.	619.	516.	440.	386.	357.	359.	407.	556.	642.
0 4	691.	714.	712.	642.	577.	516.	461.	424.	412.	428.	469.

0HORIZONTAL MEMBER STRESSES DL + ADDED DL + MAX NEG LL + I + P/S FOR TOP FIBER (PSI)

0 1	441.	580.	674.	726.	735.	702.	628.	515.	353.	90.	-281.
0 2	-151.	178.	362.	459.	517.	544.	540.	504.	417.	232.	-126.
0 3	-90.	179.	325.	409.	470.	512.	533.	526.	480.	346.	65.
0 4	11.	95.	178.	236.	289.	339.	383.	415.	423.	409.	372.

0**** MIN PJACK = 15420. KIPS CONC STRENGTH AT 28 DAYS = 2692. PSI AT STRESSING = 1259. PSI ****

0**** REDESIGN HAS TAKEN PLACE FOR PJACK TO ELIMINATE TENSION UNDER (DL + ADDED DL + P/S) CONDITION.
**** POINT OF CONTROL CAN BE FOUND UNDER (DL + ADDED DL + P/S) STRESSES.

```
1ACCOUNT:                          CALTRANS BDS-VERSION 3.00  REL-10  05/10/92,    JAN. 05, 1994 PAGE  47

                        D I V I S I O N   O F   S T R U C T U R E S  –  C A L T R A N S
                     AN BRIDGE DESIGN PRACTICE EXAMPLE
0TOTAL PE MOMENTS FOR ALL MEMBERS.
 MEM
  NO   LEFT      .1 PT    .2 PT    .3 PT    .4 PT    .5 PT    .6 PT    .7 PT    .8 PT    .9 PT    RIGHT
0 1   -2483.   -10941.  -16853.  -20186.  -20909.  -18952.  -14311.   -6931.    3221.   16174.   27743.
0 2   32714.    19635.    4980.   -5558.  -12047.  -14551.  -13161.   -7875.    1216.   14048.   24637.
0 3   26927.    15115.    1873.   -7547.  -13217.  -15201.  -13590.   -8381.     331.   12484.   22536.
0 4   17442.    11792.    4256.    -428.   -3737.   -5685.   -6289.   -5990.   -5190.   -3890.   -2094.
0 5   -6165.    -5051.   -3938.   -2824.   -1711.    -597.     516.    1630.    2743.    3857.    4971.
0 6   -2245.    -1792.   -1338.    -885.    -431.      22.     476.     930.    1383.    1837.    2290.
0 7    4205.     3275.    2345.    1415.     485.    -444.   -1374.   -2304.   -3234.   -4164.   -5094.
0TOTAL P/S DEFLECTION FOR TRIAL
0TANGENTIAL ROTATIONS - RADIANS - CLOCKWISE POSITIVE
    SPAN    LT. END     RT. END     SPAN    LT. END     RT. END     SPAN    LT. END     RT. END
0     1    -0.001975   0.000374      2     0.000374   -0.000016     3    -0.000016    0.000170
0     4     0.000170   0.000330      5     0.000000    0.000374     6     0.000000   -0.000016
0     7     0.000000   0.000170
0HORIZONTAL MEMBER DEFLECTIONS IN FEET AT 1/ 4 POINTS FROM LEFT END - DOWNWARD POSITIVE
0     MEMBER  1    E= 3600.    0.000    -0.147    -0.178    -0.092     0.000
0     MEMBER  2    E= 3600.    0.000    -0.045    -0.100    -0.058     0.000
0     MEMBER  3    E= 3600.    0.000    -0.056    -0.102    -0.060     0.000
0     MEMBER  4    E= 3600.    0.000    -0.004    -0.014    -0.013     0.000
0VERTICAL MEMBER DEFLECTIONS IN FEET AT 1/ 4 POINTS FROM LEFT END.
0     MEMBER  5    E= 3250.    0.000     0.011     0.036     0.064     0.000
0     MEMBER  6    E= 3250.    0.000     0.005     0.016     0.026     0.000
0     MEMBER  7    E= 3250.    0.000    -0.003    -0.008    -0.013     0.000


 MEMBER DEFLECTIONS HAVE BEEN MULTIPLIED BY A CREEP FACTOR OF 3.  * * * * *
```

1ACCOUNT: CALTRANS BDS-VERSION 3.00 REL-10 05/10/92, JAN. 05, 1994 PAGE 48

D I V I S I O N O F S T R U C T U R E S – C A L T R A N S

AN BRIDGE DESIGN PRACTICE EXAMPLE

0TOTAL TOP PF FOR TRIAL

MEM NO	LEFT	.1 PT	.2 PT	.3 PT	.4 PT	.5 PT	.6 PT	.7 PT	.8 PT	.9 PT	RIGHT
0 1	0.	0.	0.	0.	0.	0.	0.	0.	0.	13287.	13230.
0 2	13230.	13018.	0.	0.	0.	0.	0.	0.	0.	12486.	12263.
0 3	12263.	12050.	0.	0.	0.	0.	0.	0.	0.	11512.	11288.
0 4	11288.	11117.	11062.	0.	0.	0.	0.	0.	0.	0.	0.

0TOTAL BOTTOM PF FOR TRIAL

0 1	12834.	12886.	12938.	12990.	13041.	13080.	13132.	13184.	13235.	0.	0.
0 2	0.	0.	12941.	12873.	12805.	12737.	12686.	12619.	12552.	0.	0.
0 3	0.	0.	11972.	11903.	11834.	11766.	11715.	11647.	11579.	0.	0.
0 4	0.	0.	0.	11018.	10975.	10931.	10888.	10872.	10856.	10840.	10823.

1ACCOUNT: CALTRANS BDS-VERSION 3.00 REL-10 05/10/92, JAN. 05, 1994 PAGE 49

D I V I S I O N O F S T R U C T U R E S – C A L T R A N S

AN BRIDGE DESIGN PRACTICE EXAMPLE

0 LONG TERM LOSSES

TOTAL LOSS (KSI) = SH + ES + CRC + CRS

MEM NO	LEFT	.1 PT	.2 PT	.3 PT	.4 PT	.5 PT	.6 PT	.7 PT	.8 PT	.9 PT	RIGHT
0 1	18.1	18.0	17.6	17.3	17.4	17.9	18.6	19.1	18.9	17.2	12.3
0 2	13.5	17.3	18.8	19.4	19.5	19.3	19.1	18.7	18.0	16.7	12.6
0 3	12.7	15.9	17.2	17.8	17.8	17.5	17.0	16.5	16.2	15.9	13.3
0 4	12.8	14.0	14.9	15.2	15.3	15.3	15.1	15.0	15.0	15.0	15.0

0 * * * * THE AVERAGE LONG TERM PRESTRESS LOSSES IS 16.5 KSI. * * * *

0 SHEAR DESIGN - AASHTO 1981

0	LEFT	.1 PT	.2 PT	.3 PT	.4 PT	.5 PT	.6 PT	.7 PT	.8 PT	.9 PT	RIGHT
MEMBER: 1											
0V-CABLE	837.	652.	436.	219.	0.	224.	449.	676.	904.	1048.	141.
SECONDARY	57.	57.	57.	57.	57.	57.	57.	57.	57.	57.	57.
VU	3873.	2985.	2134.	1324.	623.	1330.	2103.	2936.	3784.	4647.	5546.
VC	3073.	2891.	1890.	1027.	650.	1035.	1824.	2936.	2676.	3316.	2614.
REQD WEB	120.	120.	120.	120.	120.	120.	120.	120.	120.	120.	140. *
AS(IN)/FT	4.88	1.69	1.91	1.76	1.20 *	1.76	2.04	1.29	6.07	7.33	14.08
MEMBER: 2											
0V-CABLE	157.	1133.	917.	609.	303.	0.	300.	597.	890.	1087.	73.
SECONDARY	-50.	-50.	-50.	-50.	-50.	-50.	-50.	-50.	-50.	-50.	-50.
VU	5094.	4129.	3201.	2290.	1411.	636.	1327.	2213.	3129.	4057.	5021.
VC	2417.	2557.	2419.	2693.	1365.	650.	1215.	2482.	2491.	3298.	2307.
REQD WEB	128. *	120.	120.	120.	120.	120.	120.	120.	120.	120.	130. *
AS(IN)/FT	12.87	8.06	4.52	1.20 *	1.20 *	1.20 *	1.20 *	1.20 *	3.91	4.80	12.99

Continued on next page

Continued from previous page

```
MEMBER:  3
0V-CABLE      157.    1135.    919.    610.    304.     0.    301.    597.    889.    1085.    72.
 SECONDARY    -24.     -24.    -24.    -24.    -24.   -24.    -24.    -24.    -24.     -24.   -24.
 VU          4783.    3869.   2991.   2147.   1341.   658.   1192.   2029.   2902.    3779.  4686.
 VC          2254.    2486.   2369.   2700.   1378.   650.   1277.   2610.   3037.    3228.  2110.
 REQD WEB     122. *   120.    120.    120.    120.   120.    120.    120.    120.     120.   122.
*
 AS(IN)/FT   12.15     7.20    3.78    1.20 *  1.20 *  1.20 *  1.20 *  1.20 *  1.20 *   3.85  12.29

 MEMBER:  4
0V-CABLE      123.     893.    769.    575.    382.   190.      7.     72.    143.     215.   277.
 SECONDARY      5.       5.      5.      5.      5.     5.      5.      5.      5.       5.     5.
 VU          3847.    3277.   2751.   2232.   1698.  1238.    769.    742.   1205.    1677.  2220.
 VC          2128.    2118.   2022.   1967.   2488.  1878.    996.   1523.   2241.    2311.  2372.
 REQD WEB     120.     120.    120.    120.    120.   120.    120.    120.    120.     120.   120.
 AS(IN)/FT    8.52     6.04    4.10    2.04    1.20 *  1.20 *  1.20 *  1.20 *  1.20 *   1.20 *  1.20
*

0NOTE:  * AFTER REQD WEB INDICATES ADDITIONAL WEB WIDTH REQD.   * AFTER AS(IN)/FT INDICATES MINIMUM REQD.
```

1ACCOUNT: CALTRANS BDS-VERSION 3.00 REL-10 05/10/92, JAN. 05, 1994 PAGE 50

D I V I S I O N O F S T R U C T U R E S – C A L T R A N S

AN BRIDGE DESIGN PRACTICE EXAMPLE

AASHTO ULTIMATE MOMENT

0	SECOND MOMENT (K-FT)	ULT MOM APPLD (K-FT)	ULT MOM P/S CAP (K-FT)	AVERAGE FSU (KSI)	NEUTRAL AXIS (IN)	MILD STEEL REQD (SQ.IN)	COMBINED REINFORCEMENT INDEX	ULT MOM MILD CAP (K-FT)	ULT MOM TOTAL CAP (K-FT)
0MEMBER: 1									
0 0.0 PT.	0.	0.	0.	0.00	0.00	0.00	0.000	0.	0.
0 0.1 PT.	685.	38806.	60109.	263.83	5.35	0.00	0.097	0.	60109.
0 0.2 PT.	1370.	65807.	69934.	264.48	5.37	0.00	0.084	0.	69934.
0 0.3 PT.	2055.	81742.	75489.	264.50	5.76	23.57	0.084	6360.	81849.
0 0.4 PT.	2741.	88166.	77203.	264.40	6.04	41.50	0.086	11174.	88376.
0 0.5 PT.	3426.	83304.	75372.	264.43	5.86	29.95	0.085	8076.	83448.
0 0.6 PT.	4111.	68114.	69824.	264.47	5.37	0.00	0.084	0.	69824.
0 0.7 PT.	4796.	42155.	59861.	263.81	5.35	0.00	0.097	0.	59861.
0 0.8 PT.	5481.	18257.	46151.	261.71	5.79	0.00	0.132	0.	46151.
0 0.9 PT.	6166.	47577.	64105.	263.72	5.84	0.00	0.099	0.	64105.
0 1.0 PT.	6851.	89181.	73101.	263.51	6.93	62.09	0.102	16439.	89540.
0MEMBER: 2									
0 0.0 PT.	11822.	79705.	73704.	264.04	6.26	23.07	0.092	6138.	79842.
0 0.1 PT.	11167.	43975.	62112.	263.56	5.83	0.00	0.102	0.	62112.
0 0.2 PT.	10512.	15664.	41157.	260.78	5.77	0.00	0.146	0.	41157.
0 0.3 PT.	9856.	44211.	65841.	264.24	5.36	0.00	0.089	0.	65841.
0 0.4 PT.	9201.	63373.	75696.	268.04	5.43	0.00	0.080	0.	75696.
0 0.5 PT.	8546.	69857.	78701.	268.10	5.43	0.00	0.077	0.	78701.
0 0.6 PT.	7891.	64293.	75696.	268.04	5.43	0.00	0.080	0.	75696.
0 0.7 PT.	7236.	46061.	65841.	264.24	5.36	0.00	0.089	0.	65841.
0 0.8 PT.	6581.	17268.	50888.	262.95	5.33	0.00	0.112	0.	50888.
0 0.9 PT.	5926.	33442.	62112.	263.56	5.83	0.00	0.102	0.	62112.
0 1.0 PT.	5271.	73998.	74071.	264.36	5.85	0.00	0.087	0.	74071.

1ACCOUNT: CALTRANS BDS-VERSION 3.00 REL-10 05/10/92, JAN. 05, 1994 PAGE 51

D I V I S I O N O F S T R U C T U R E S – C A L T R A N S

AN BRIDGE DESIGN PRACTICE EXAMPLE

AASHTO ULTIMATE MOMENT

0	SECOND MOMENT (K-FT)	ULT MOM APPLD (K-FT)	ULT MOM P/S CAP (K-FT)	AVERAGE FSU (KSI)	NEUTRAL AXIS (IN)	MILD STEEL REQD (SQ.IN)	COMBINED REINFORCEMENT INDEX	ULT MOM MILD CAP (K-FT)	ULT MOM TOTAL CAP (K-FT)
0MEMBER: 3									
0 0.0 PT.	7561.	70149.	74071.	264.36	5.85	0.00	0.087	0.	74071.
0 0.1 PT.	7276.	40336.	62112.	263.56	5.83	0.00	0.102	0.	62112.
0 0.2 PT.	6991.	14991.	41157.	260.78	5.77	0.00	0.146	0.	41157.
0 0.3 PT.	6706.	39266.	65841.	264.24	5.36	0.00	0.089	0.	65841.
0 0.4 PT.	6421.	55901.	75696.	268.04	5.43	0.00	0.080	0.	75696.
0 0.5 PT.	6136.	61573.	78701.	268.10	5.43	0.00	0.077	0.	78701.
0 0.6 PT.	5850.	56923.	75696.	268.04	5.43	0.00	0.080	0.	75696.
0 0.7 PT.	5565.	41411.	65841.	264.24	5.36	0.00	0.089	0.	65841.
0 0.8 PT.	5280.	18642.	50888.	262.95	5.33	0.00	0.112	0.	50888.
0 0.9 PT.	4995.	22891.	62112.	263.56	5.83	0.00	0.102	0.	62112.
0 1.0 PT.	4710.	60090.	74071.	264.36	5.85	0.00	0.087	0.	74071.
0MEMBER: 4									
0 0.0 PT.	-384.	57363.	74071.	264.36	5.85	0.00	0.087	0.	74071.
0 0.1 PT.	-346.	44780.	68151.	264.01	5.84	0.00	0.093	0.	68151.
0 0.2 PT.	-307.	31681.	57489.	263.15	5.82	0.00	0.109	0.	57489.
0 0.3 PT.	-269.	20622.	49191.	262.17	5.80	0.00	0.125	0.	49191.
0 0.4 PT.	-231.	14944.	48790.	262.69	5.33	0.00	0.117	0.	48790.
0 0.5 PT.	-192.	21619.	52345.	263.11	5.34	0.00	0.110	0.	52345.
0 0.6 PT.	-154.	25053.	53530.	263.23	5.34	0.00	0.107	0.	53530.
0 0.7 PT.	-115.	24734.	53081.	263.19	5.34	0.00	0.108	0.	53081.
0 0.8 PT.	-77.	20926.	51733.	263.04	5.34	0.00	0.111	0.	51733.
0 0.9 PT.	-38.	12751.	49487.	262.78	5.33	0.00	0.115	0.	49487.
0 1.0 PT.	0.	0.	0.	0.00	0.00	0.00	0.000	0.	0.

NOTE : THE ULTIMATE MOMENT CAPACITY IS BASED ON THE CONCRETE STRENGTH OF 4.00 KSI. GIVEN BY USER. * * * * *

THE MAXIMUM CALACULATED REINFORCEMENT INDEX ALLOWED FOR THIS STRUCTURE IS 0.306. * * * * *

```
1ACCOUNT:                          CALTRANS BDS-VERSION 3.00  REL-10  05/10/92,    JAN. 05, 1994 PAGE  52

                        D I V I S I O N   O F   S T R U C T U R E S  –  C A L T R A N S
                     AN BRIDGE DESIGN PRACTICE EXAMPLE
0                                                  TENDON ELONGATION
0   PATH NO.       P-JACK      % JACK      FY        AS       AVE STRESS     TENDON LENGTH     ELONGATION
                   (KIPS)                 (KSI)     (SQ IN)     (KSI)            (FT) *           (IN)
0     1A           15420.        75.      270.                 181.26           444.00           34.49
0NOTE: TENDON LENGTH INCLUDES 4 FEET FOR JACKS.
0      MODULUS USED FOR P/S STEEL IS 28000. KSI.
```

```
1ACCOUNT:                    CALTRANS BDS-VERSION 3.00  REL-10  05/10/92,    JAN. 05, 1994 PAGE  53

                 D I V I S I O N   O F   S T R U C T U R E S  –  C A L T R A N S
                AN BRIDGE DESIGN PRACTICE EXAMPLE
0                              'APPROXIMATE QUANTITY'
                               ======================
0                     *****  CONCRETE SUPER          2981 C.Y.  *****

                      *****  CONCRETE SUB             284 C.Y.  *****
0                     *****  P/S TRIAL             113927 LBS.  *****
0               THE SUPERSTRUCTURE CONCRETE QUANTITY IS BASED ON THE UNIT
                WEIGTH OF CONCRETE SUPPLIED ON THE FRAME DESCRIPTION CARD.
                IT ASSUMES THAT ALL THE DEAD LOAD IS GIVEN IN TRIAL 0.

                THE CONCRETE SUBSTRUCTURE QUANTITY IS BASED ON TRIAL 0 ONLY.

                THE P/S QUANTITIES FOR STRAND ONLY ARE FOR EACH TRIAL  THAT
                WAS ENTERED AND IN THAT ORDER.  STRAND USE IS BASED ON THE
                LENGTH FROM ANCHOR TO ANCHOR.
```

```
1END OF JOB - 022086


    *** PLOTTING INFORMATION ***

        NUMBER OF PLOTS  =    2

        LENGTH OF PLOTS  =   76  INCHES

        TIME TO PLOT     =  180  SECONDS
```