Typical Section Sheet Check List

A. Typical Section

1. Place at top of sheet looking ahead on station. If the section is looking ahead on bent numbering sequence, but back on stationing, note this under the view title.
2. Scale ⅛" = 1"-0" for left and right or extremely wide structures. Scale ¼" = 1'-0" normal minimum for single structures.
3. Show only concrete dimensions. Do not show any reinforcement except as noted.
4. Show girders spacing and over all deck width measured from bridge layout line.
5. This view may be combined with Part Typical Section as noted below.
6. Check list:
   - Show utilities, detail size, material, use and owner.
   - Call out rail types.
   - Designate deck seal and limits of refinish bridge deck, if any.
   - Do not show substructure.
   - Do not show lanes and shoulders shown on General Plan.

B. Part Typical Section

1. Place below Typical Section.
2. Scale usually ½" = 1'-0", but not less than ⅜" = 1'-0"
3. Show, but do not call out, reinforcing or details shown on Standard Sheets.
4. Show barrier and sidewalk dowels but do not indicate size and spacing.
5. One exterior and interior bay is usually sufficient. Show variable bays and dissimilar overhangs.
6. A full width section may be used instead of the Typical Section above for narrow structures. Show all data as noted above.
7. On variable bays, show only the reinforcing that is different from main standard bays.
8. Check list:
   - Reinforcing clearances.
   - Top and bottom transverse reinforcement size and spacing.
   - Reference to standard plans.
   - Distribution reinforcement.
   - Extra ("G") bars in top slab.
   - Direction of placement and spacing of transverse reinforcement.

9. Precast I Girders:
   - Show deck thickness at supports.
   - Show minimum thickness at midspan.

C. Other Sections and Details

1. If any other sections or details are shown on this sheet (such as end diaphragm or curb details), they should be drawn at the same or compatible scale as the Part Typical Section; ⅜" = 1'-0" and ¾" = 1'-0"; ½" = 1'-0" and 1'= 1'-0".
2. Do not clutter the sheet. Use additional sheets for special deck details or slab reinforcing layouts.
3. Place part girder section (Decal #17) and/or alternative deck construction joint top or bottom slab (Decal #19) if applicable.
4. If a future widening is anticipated, refer to *Memo to Designers* 1-11 for additional bottom transverse reinforcing in overhang.

D. Epoxy-Coated Reinforcement

1. Show limits of epoxy coating.

Box Girder Soffits

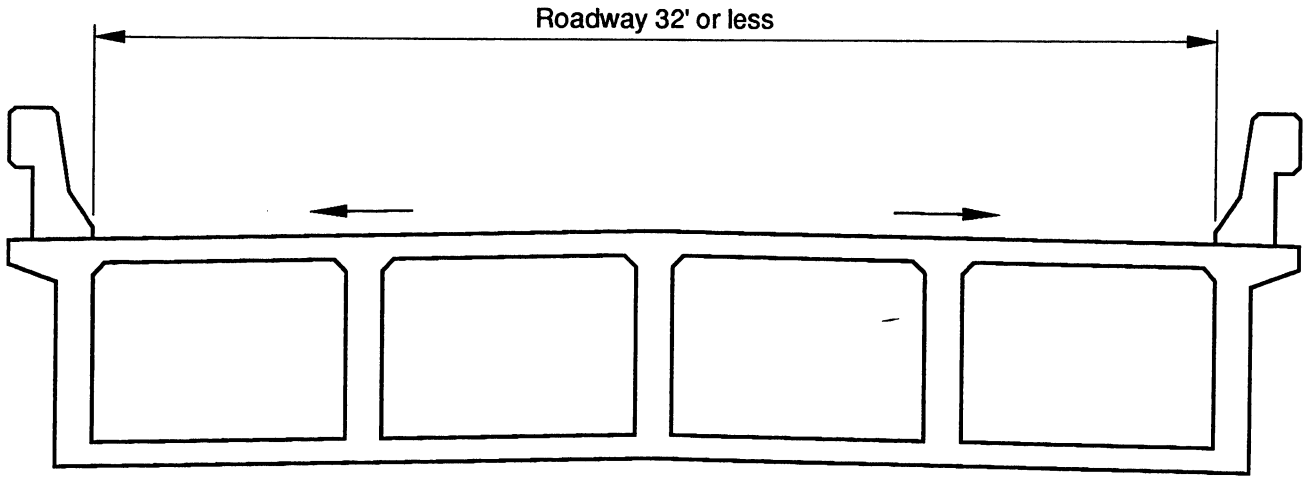

Note: At contractor's option the soffit may be cast on a straight line between outside edges of box girder. Slab thickness to remain as shown. Stem and stirrup heights to vary to meet finished grades and provide clearances shown.

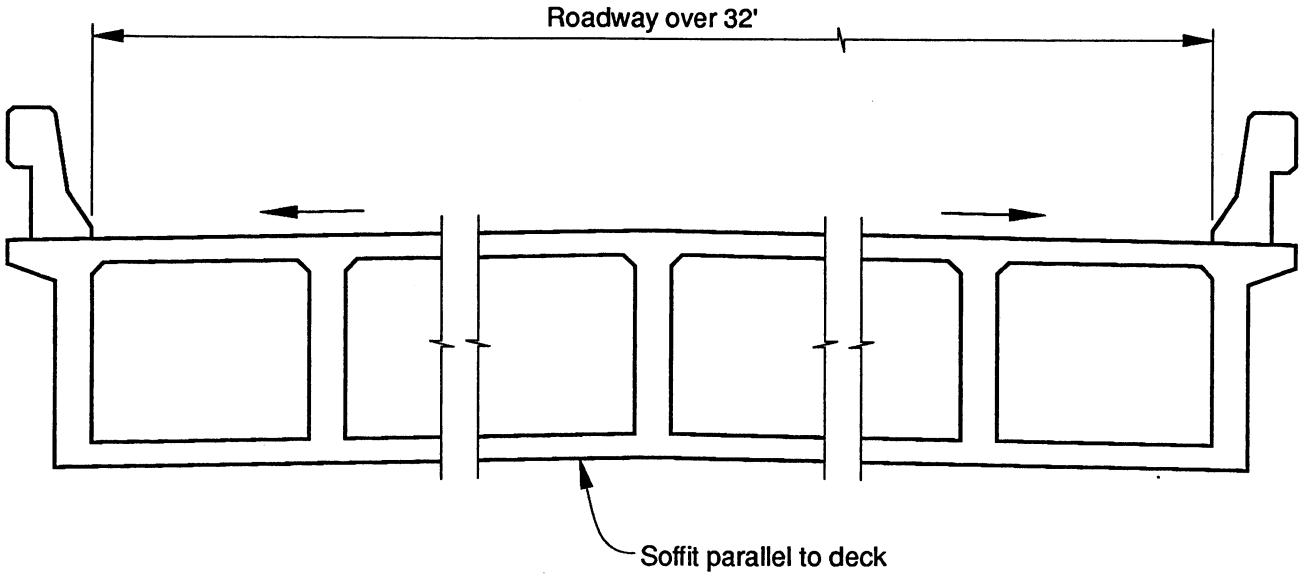

Notes to Detailer:

1. Show all box sections as constant depth.
2. Show note adjacent to typical section.

Sloped Exterior Girders

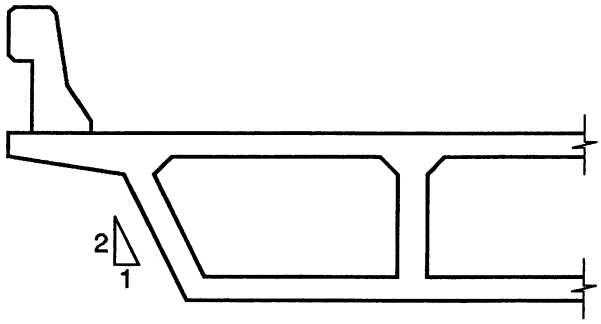

A standard 1:2 slope should be used for the exterior face of reinforced concrete or prestressed concrete box girders when the general configuration shown above is desired for architectural purposes.

Typical sections on the plans should be dimensioned as shown below in order to obtain this slope. The slope will vary at superelevation transitions.

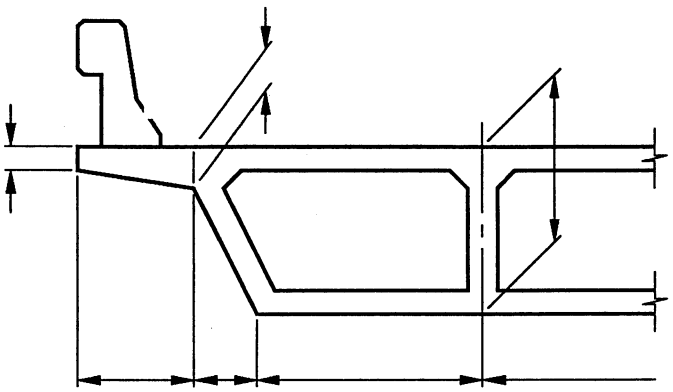

Standard Precast Prestressed Girders

For precast prestressed girder details see "Bridge Design Aids" manual Section 6, "Bridge Design Details" manual Section 20 and Memo to Designers 11-9.

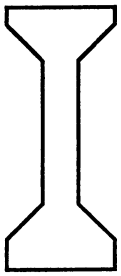

"I" Girder

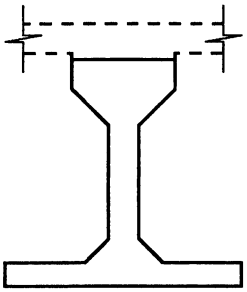

Inverted "T" Girder

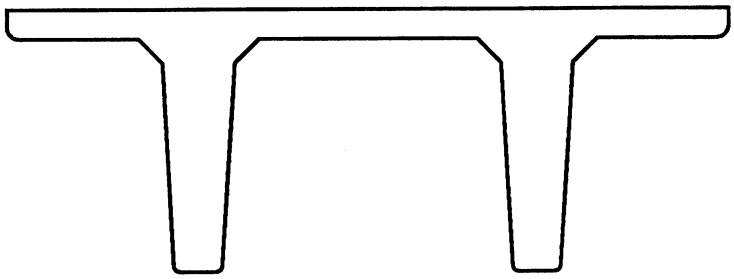

Double "T" Girder

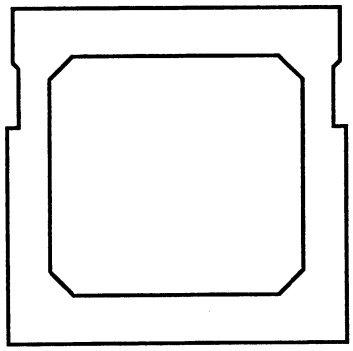

Box Girder

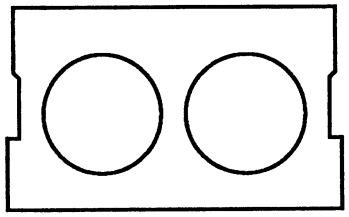

Prestressed Slab

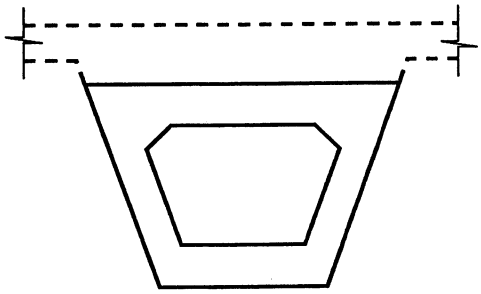

Prestressed Trapezoidal Box Girder

Deck Slab Reinforcement

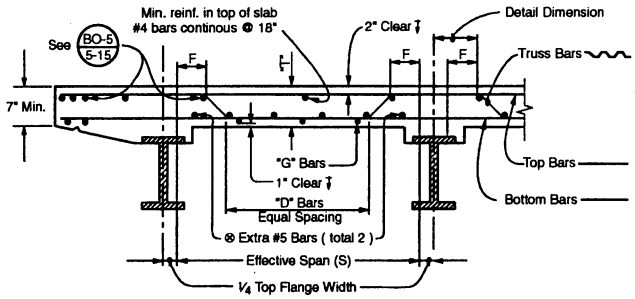

Slab On Steel Girders

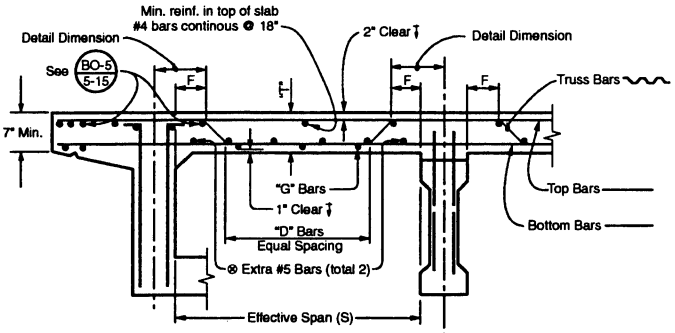

Slab On Concrete Girders

Detail Data:

Designers to specify span to be used and girder width.

⊗ Extra "D" bars to be added when S ≥ 11'.

Notes:

For culverts or bridge slabs supporting fill, note provisions of BDS 6.4.

Design based on decks having 3 or more girders.

For 2 girder decks a special design is required.

Effective overhang shall not be greater than ½ the effective span (s).

‡ Increase cover over bars and adjust slab thickness if required for environmental conditions. See BDS 8.22 and Memo to Designers 8-2.

Design Data:

Design Stresses: See BDS 8.15

fs = 20,000 lbs. per sq. in.

fc = 1200 lbs. per sq. in.

n = 10

Design Loads: See BDS 3.24

M_{DL} (ft-k) = $\frac{wS^2}{10}$

M_{LL} + I (ft-k) = $\frac{P(S+2)}{32} \times 1.30 \times 0.80 = .52(S+2)$

w = Weight per lin. ft. width of slab.

(includes 35 $^{\#}/_{ft.^2}$ deck overlay allowance.)

S = Effective span

Impact factor 1.30

Continuity factor 0.08

P = Wheel load = 16^k

Distribution Reinforcement:

$220/\sqrt{s}$, max. = 67%. See BDS 3.24.10

"S" Effective Span	"T" ‡ Top Slab	Dim. "F"	Trans. Bars Size	Trans. Bars Spacing	"D" Bars #5 Bars	"G" Bars #4 Bars
4' - 0"	6 1/2	6"	#5	13"	4	2
4' - 3"	6 5/8"	7"		13"	4	2
4' - 6"	6 3/4"	7"		12"	4	2
4' - 9"	6 7/8"	7"		12"	4	3
5" - 0"	6 7/8"	8"		12"	4	
5" - 3"	7"	8"		12"	4	
5' - 6"	7 1/8"	9"		11"	4	
5' - 9"	7 1/8"	9"		11"	4	
6' - 0"	7 1/4"	9"		11"	4	
6' - 3"	7 3/8"	10"		11"	5	
6' - 6"	7 1/2"	10"		11"	5	
6' - 9"	7 1/2"	11"		10"	5	
7' - 0"	7 5/8"	11"		10"	6	
7' - 3"	7 3/4"	11"		10"	6	
7' - 6"	7 3/4"	1' - 0"	#5	10"	6	3
7' - 9"	7 7/8"	1' - 0"	#6	13"	7	4
8' - 0"	8"	1' - 1"		13"	7	
8' - 3"	8 1/8"	1' - 1"		13"	7	
8' - 6"	8 1/8"	1' - 1"		13"	8	
8' - 9"	8 1/4"	1' - 2"		13"	8	
9' - 0"	8 3/8"	1' - 2"		13"	8	
9' - 3"	8 3/8"	1' - 2"		12"	10	
9' - 6"	8 1/2"	1' - 3"		12"	10	
9' - 9"	8 5/8"	1' - 3"		12"	10	
10' - 0"	8 5/8"	1' - 4"		12"	10	
10' - 3"	8 3/4"	1' - 4"		12"	11	
10' - 6"	8 7/8"	1' - 4"		12"	11	4
10' - 9"	8 7/8"	1' - 5"		11"	12	5
11' - 0"	9"	1' - 5"		11"	12	
11' - 3"	9 1/8"	1' - 6"		11"	12	
11' - 6"	9 1/8	1' - 6"		11"	13	
11' - 9"	9 1/4"	1' - 6"		11"	13	
12' - 0"	9 3/8"	1' - 7"		11"	13	
12' - 3"	9 1/2"	1' - 7"		11"	13	
12' - 6"	9 1/2"	1' - 7"		10"	15	
12' - 9"	9 5/8"	1' - 8"		10"	15	
13' - 0"	9 3/4"	1' - 8"		10"	15	
13' - 3"	9 3/4"	1' - 9"		10"	15	
13' - 6"	9 7/8"	1' - 9"		10"	16	
13' - 9"	10"	1' - 9"		10"	16	
14' - 0"	10 1/8"	1' - 10"		10"	16	
14' - 3"	10 1/4"	1' - 10"	#6	10"	16	
14' - 6"	10 3/8"	1' - 11"	#7	13"	17	
14' - 9"	10 1/2"	1' - 11"		13"	17	
15' - 0"	10 1/2"	1' - 11"		13"	18	5
15' - 3"	10 5/8"	2' - 0"		13"	18	6
15' - 6"	10 3/4"	2' - 0"		13"	18	
15' - 9"	10 7/8"	2' - 1"		12"	19	
16' - 0"	10 7/8"	2' - 1"		12"	19	
16' - 3"	11"	2' - 1"		12"	20	
16' - 6"	11 1/8"	2' - 2"		12"	20	
16' - 9"	11 1/8"	2' - 2"		12"	20	
17' - 0"	11 1/4"	2' - 3"		12"	20	
17' - 3"	11 3/8"	2' - 3"		12"	20	6
17' - 6"	11 1/2"	2' - 3"		11"	22	7
17' - 9"	11 1/2"	2' - 4"		11"	22	
18' - 0"	11 5/8"	2' - 4"		11"	22	
18' - 3"	11 3/4"	2' - 4"		11"	23	
18' - 6"	11 7/8"	2' - 5"		11"	23	
18' - 9"	11 7/8"	2' - 5"		11"	23	
19' - 0"	12"	2' - 6"		11"	23	
19' - 3"	12 1/8"	2' - 6"		11"	23	
19' - 6"	12 1/4"	2' - 6"		11"	23	
19' - 9"	12 1/4"	2' - 7"		11"	24	
20' - 0"	12 3/8"	2' - 7"	#7	10"	26	7

Bottom Slab Reinforcement

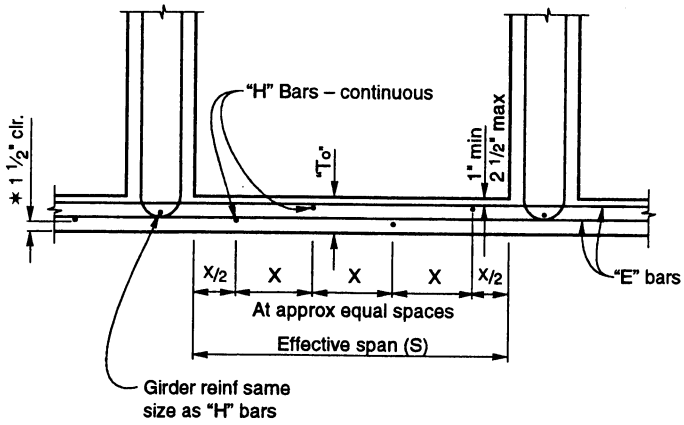

Prestressed Concrete Box Girder

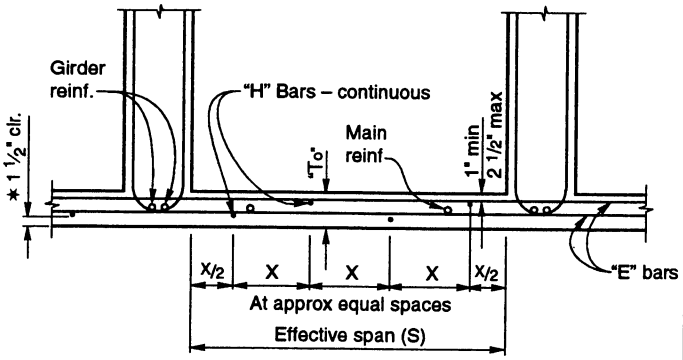

Reinforced Concrete Box Girder

"S" Effective Span	"T_O" Min. Bottom slab thick	"E" Bar Spacing	"H" Bars Continuous	
			Reinforced Concrete	Prestressed Concrete
4' - 0"	6"	#4 @ 13"	4 - #5	3 - #5
4' - 3"			4 - #5	3 - #5
4' - 6"			5 - #5	4 - #5
4' - 9"				
5' - 0"				
5' - 3"				
5' - 6"			6 - #5	
5' - 9"				5 - #5
6' - 0"				
6' - 3"				
6' - 6"			7 - #5	
6' - 9"				
7' - 0"				
7' - 3"				6 - #5
7' - 6"				
7' - 9"			8 - #5	
8' - 0"	6"			
8' - 3"	6 1/4"	12"		
8' - 6"	6 3/8"	12"	6 - #6	7 - #5
8' - 9"	6 5/8"	#5 @ 18"	7 - #6	
9' - 0"	6 3/4"	18"		
9' - 3"	7"	17"		8 - #5
9' - 6"	7 1/8"	17"	8 - #6	8 - #5
9' - 9"	7 3/8"	16"	8 - #6	6 - #6
10' - 0"	7 1/2"	16"	7 - #7	7 - #6
10' - 3"	7 3/4"	16"		
10' - 6"	7 7/8"	15"		
10' - 9"	8"	15"		8 - #6
11' - 0"	8 1/4"	15"	8 - #7	
11' - 3"	8 3/8"	14"		
11' - 6"	8 5/8"	14"		9 - #6
11' - 9"	8 3/4"	14"	9 - #7	
12' - 0"	9"	13"		
12' - 3"	9 1/8"	13"		10 - #6
12' - 6"	9 3/8"	13"	10 - #7	
12' - 9"	9 1/2"	13"	10 - #7	
13' - 0"	9 3/4"	12"	11 - #7	11 - #6
13' - 3"	9 3/4"	12"		
13' - 6"	9 7/8"	12"		
13' - 9"	10"	12"		12 - #6
14' - 0"	10 1/8"	12"	12 - #7	
14' - 3"	10 1/4"	12"	12 - #7	
14' - 6"	10 3/8"	11"	13 - #7	13 - #6
14' - 9"	10 1/2"	11"		
15' - 0"	10 1/2"	11"		

X = Bar Spacing

Note to detailer:

Girder and main reinforcement will be determined by the designer. Main reinforcement to be shown on reinforcement sheet.

Design data:

'E' Bars as per BDS 8.17.2.3
'H' Bars as per BDS 8.17.2.3 and 9.24

Note to designer:

'H' bars comply with the minimum slab reinforcement specifications. They shall also be included in the area of reinforcement required to resist applied design moments.

* Increase cover for environmental conditions. See BDS 8.22.

STRAIGHT BAR METHOD

Transverse Slab Reinforcement for 3 or More Girders

(For data not shown see page 8-30)

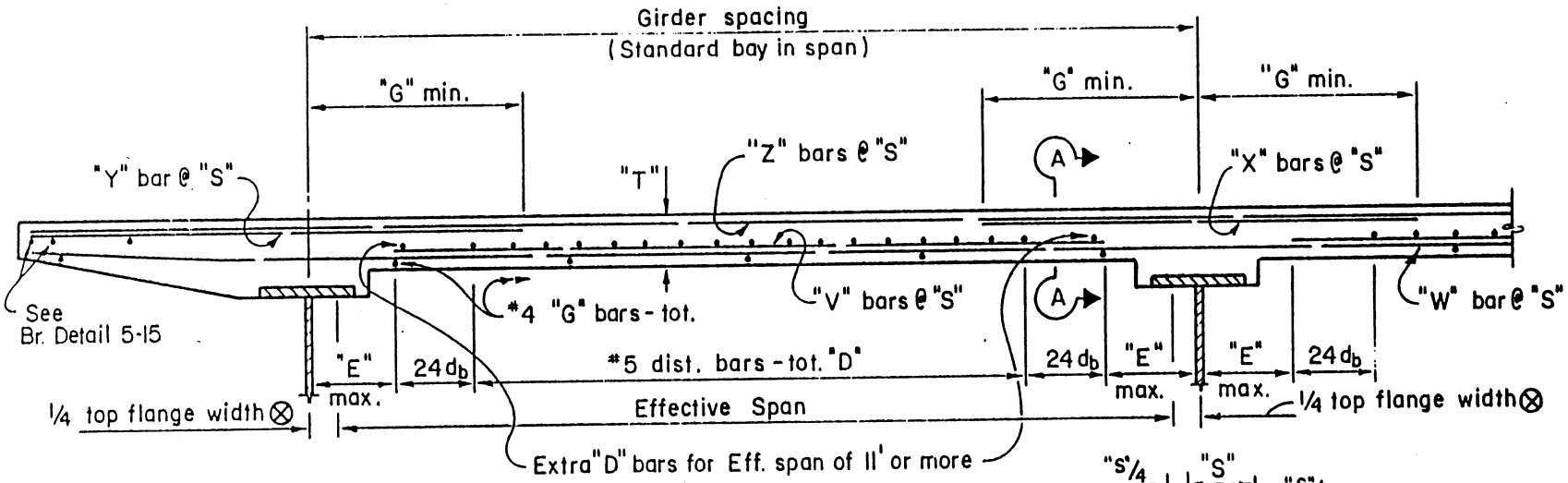

ℓ_d = Development length (See BDS Article 8.25)

* "T" = Slab thickness

t = "T" − 3 1/2"

* "S" = Bar spacing

24 d_b = 24 diameters of bar size

* "D" = Number of distribution bars

* Dim "F"

"V", "W", "X", "Y", & "Z" bar size

① "G" min. = (Dim "F") + (1/4 top flange width ⊗) + (ℓ_d)

① "E" max. = (Dim "F") + (1/4 top flange width ⊗) + (t) − (24 d_b)

* "G" bars = Slab reinforcement support bars

Values found on page 8-30
"Slabs with Tranverse Reinforcement"

① Round values to nearest 1" upwards.

⊗ For Box Girders, Tee Beams, and Precast Girders, substitute "1/2 girder stem width for 1/4 top flange width."

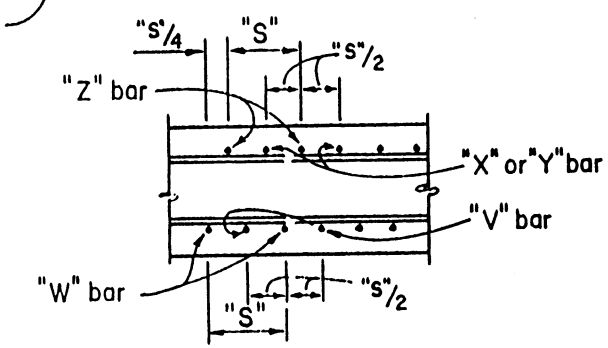

SECTION A-A

⊙ Max "D" bar spacing in variable width bays =

$$\frac{[\text{Girder spacing(above)}] - 2\,[(\text{Dim "F"}) + (1/4 \text{ top flange}^{\otimes}) + (t)]}{\text{Number of "D" bars} - 1}$$

TYPICAL TRANSVERSE REINFORCEMENT

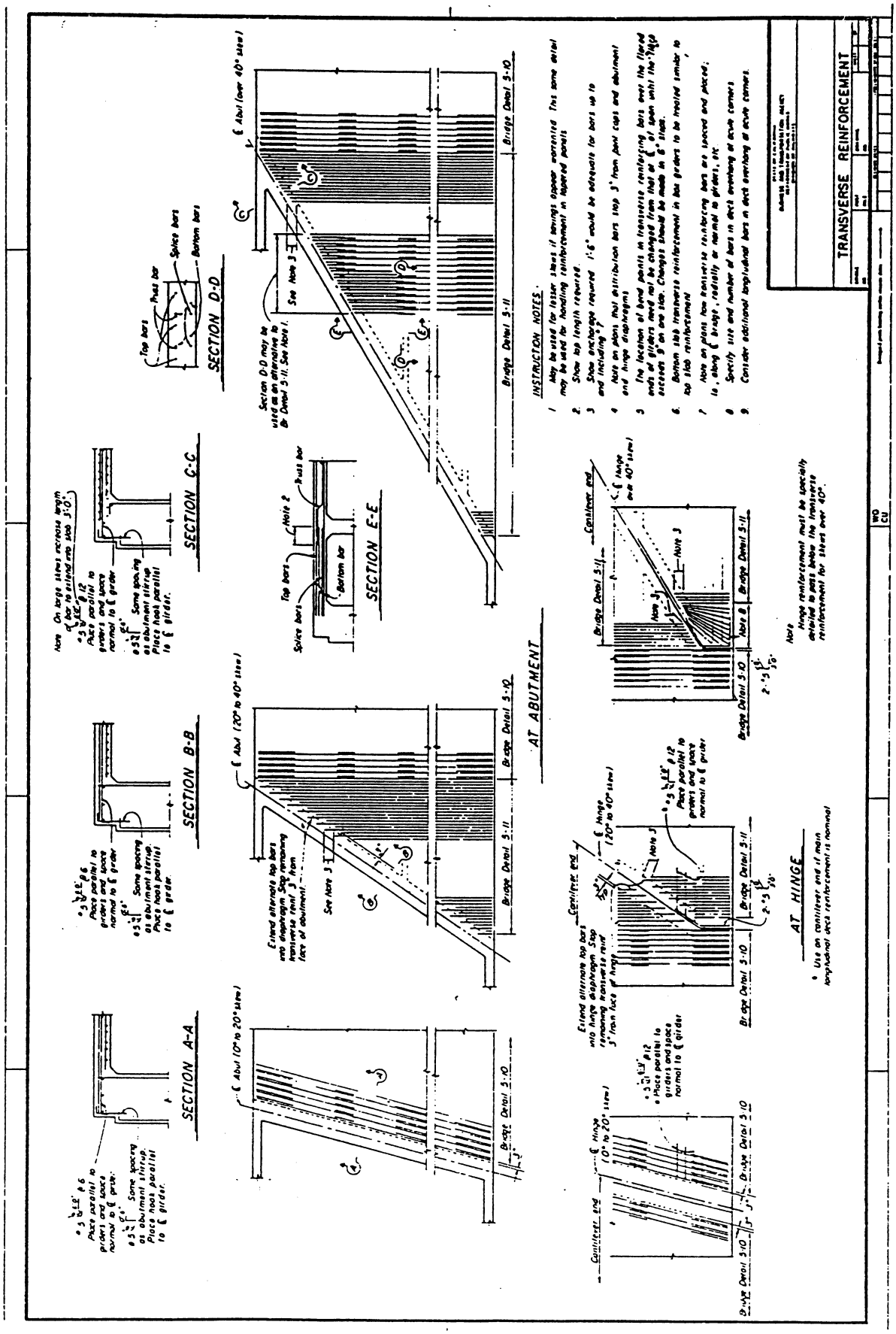

PART TYPICAL SECTION EXAMPLE

Note to Detailers : This example illustrates the use of the standard details symbol and the detailing necessary to coordinate a part typical section with the book of "Standard Plans". Designers shall provide the design data to be used from page 8-30. The longitudinal bars on the outside face of exterior sloping girders shall be spaced $\leq 9''$. This maximum spacing was chosen to aid placement and vibration of concrete.

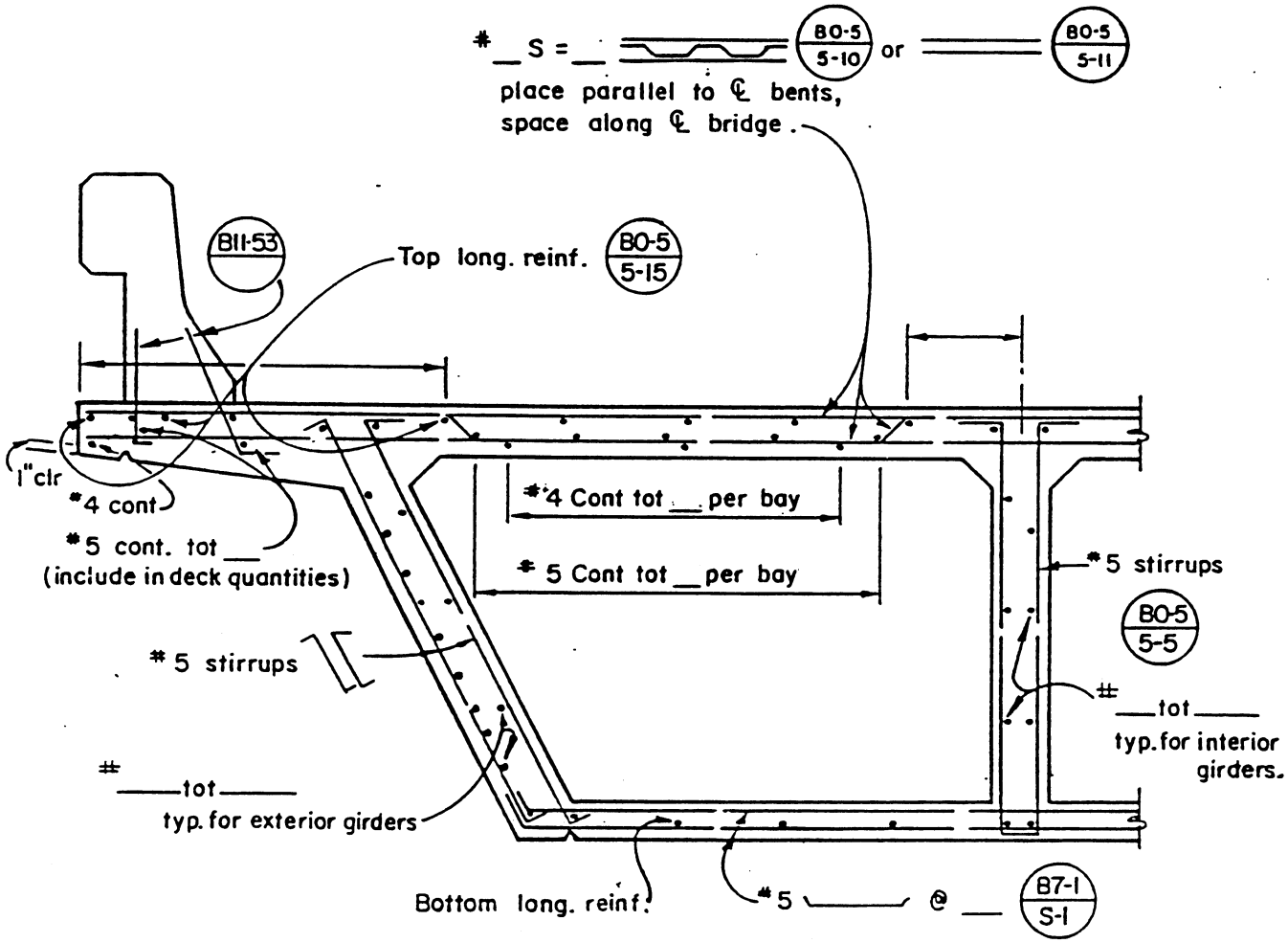

PART TYPICAL SECTION B7-1 / B-1

Scale : $1/2''$ = 1'-0"

VARIABLE BAY TRANSVERSE REINFORCEMENT

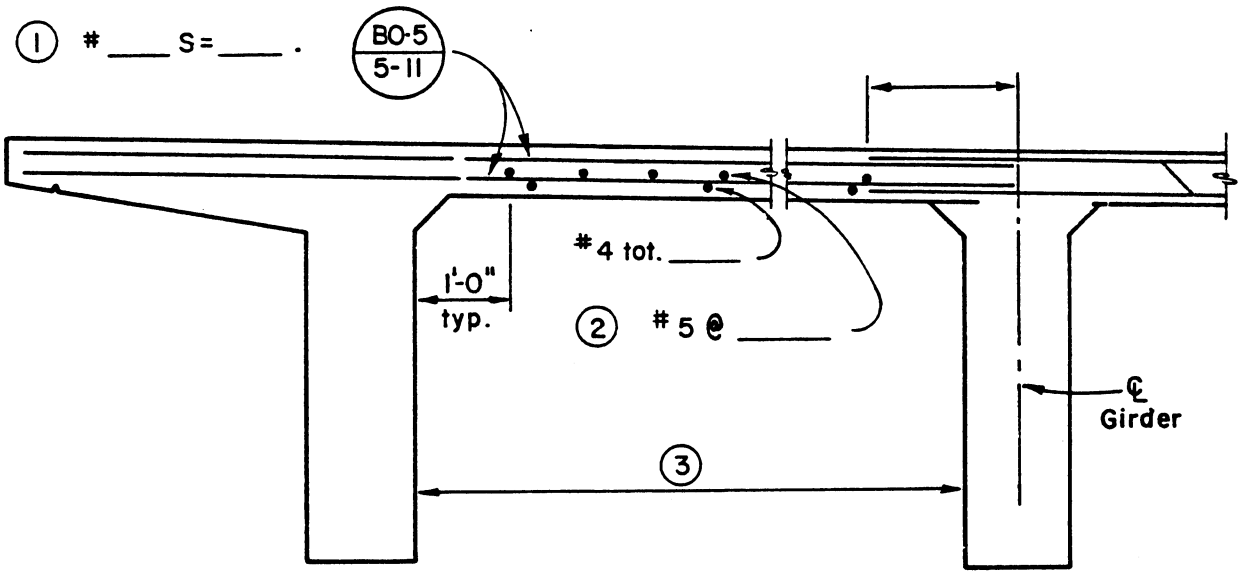

EXTERIOR

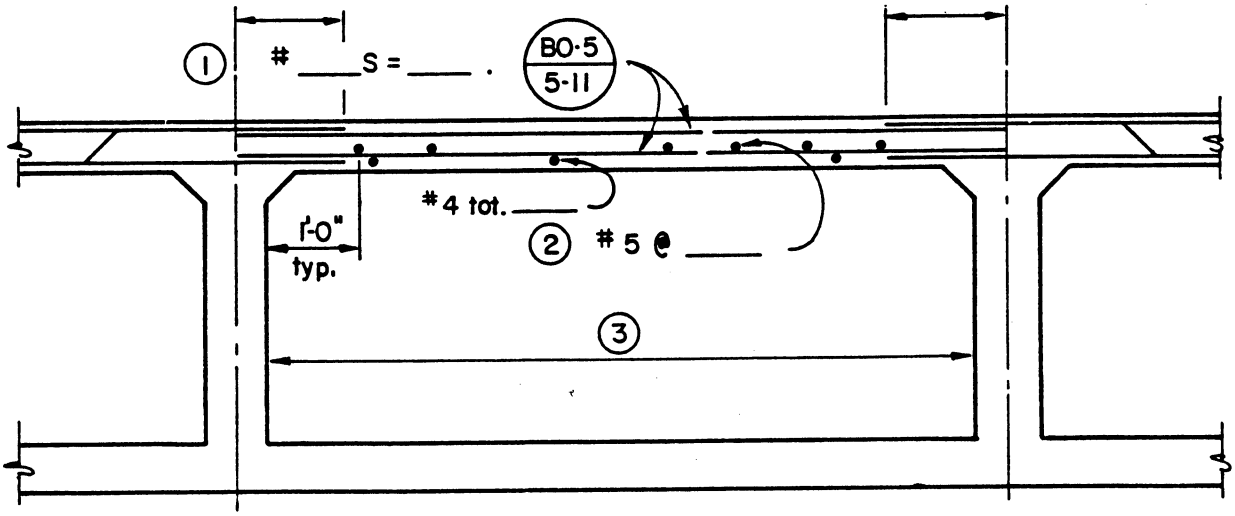

INTERIOR

1. Use same size bar at 3/4 the spacing of adjacent tranverse reinforcement. "S" is constant for both arrangements. See Standard Plan Sheet BO-5.
2. Designer to determine required distribution reinforcement.
3. Slab may be thickened or larger bars used if variable bay is wider than adjacent bay.

MINIMUM REINFORCEMENT AT DECK OVERHANGS

The following illustration together with related information shows the minimum amount of longitudinal reinforcing steel which shall be placed adjacent to rail dowels and at edge of decks. This detail applies to deck slabs for steel girders, T-Beams, Box Girders, Prestressed Girders or other situations, but not Slab Bridges.

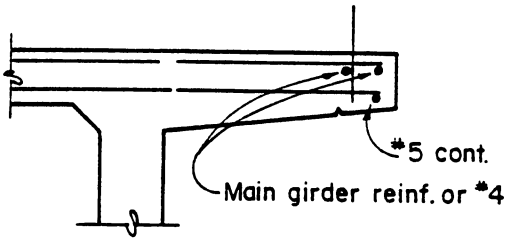

AT SIDEWALK

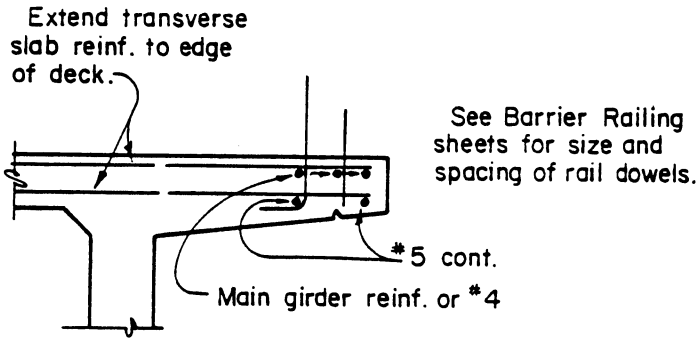

AT RAILING

1. Reinforcement is necessary to anchor the barrier rail and support the dowels and distribute impact to the slab.
2. Deck slab cracking at barrier rail joints will be minimized.
3. Overhang reinforcement should be indicated on typical section and main reinforcement sheets to insure that it will not be overlooked in construction.
4. Details should agree with Bridge Detail 5-15.

SKEWED DECK CORNER REINFORCEMENT

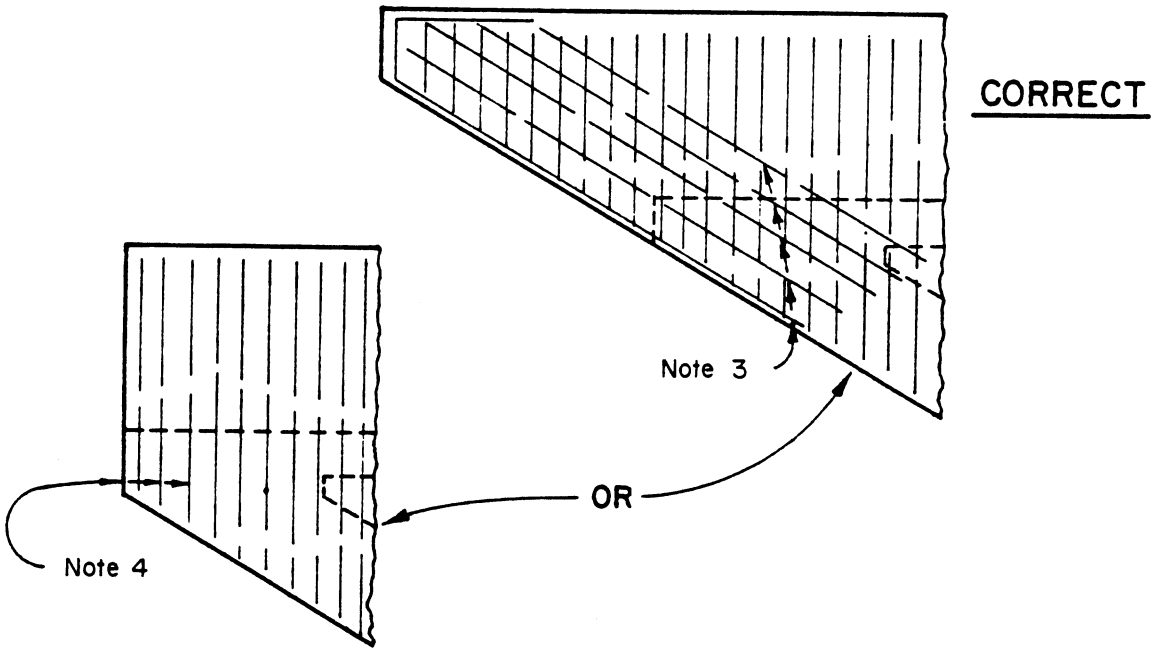

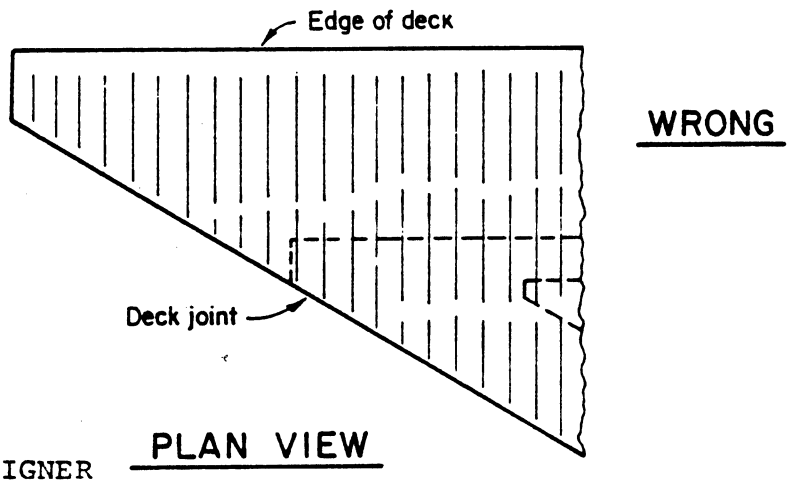

NOTES TO DESIGNER

1. Special consideration should be given to detailing the deck reinforcement in skewed corners of bridge decks.

2. Consider squaring off the deck at the end of the girder or placing reinforcing parallel to the abutment.

3. The designer should determine the amount and location of the reinforcement.

4. All reinforcement should be adequately anchored.

Median Slab with Concrete Barrier – Type 50

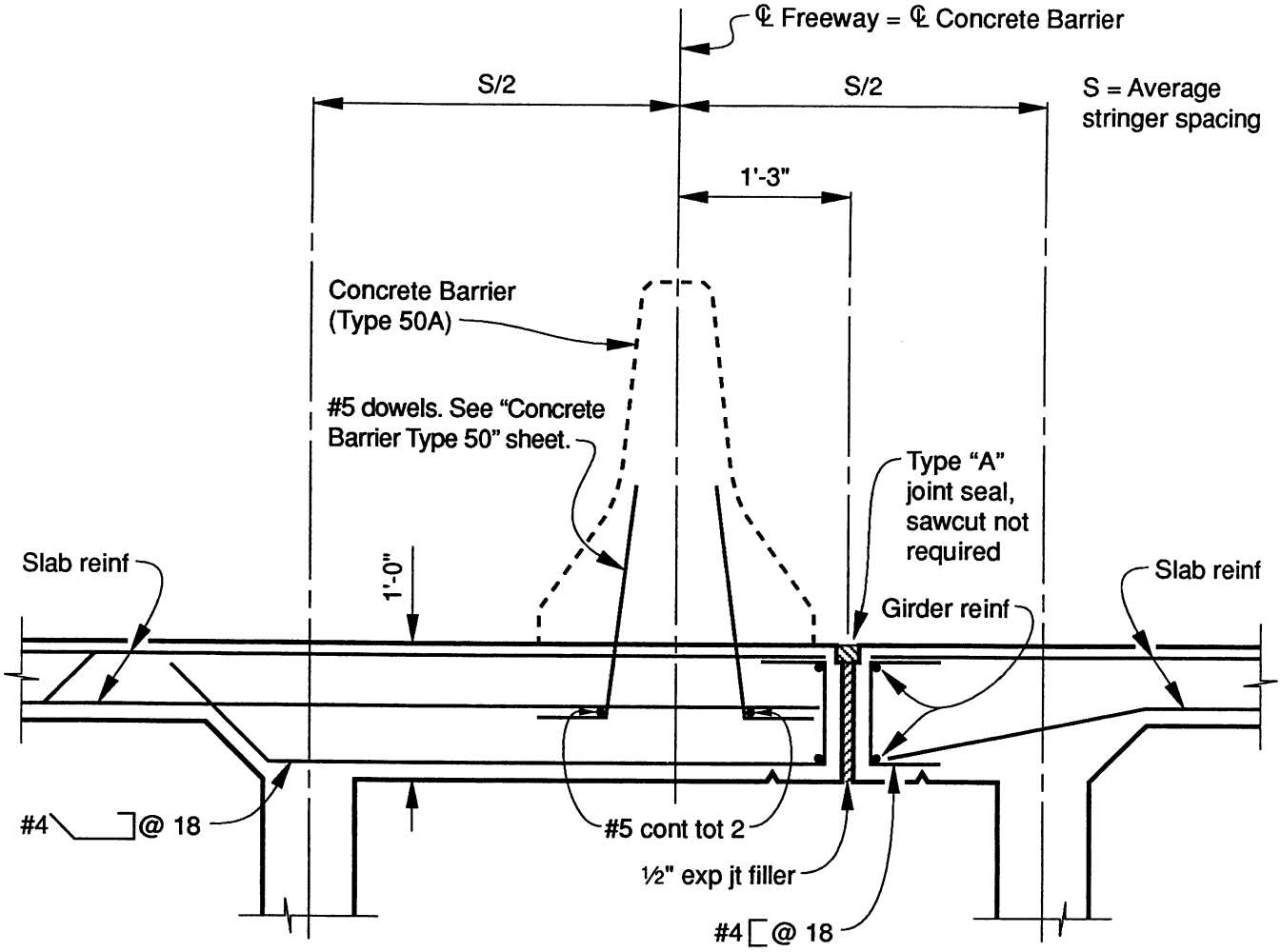

Note: Joint to be located on low side of concrete barrier.

Medians

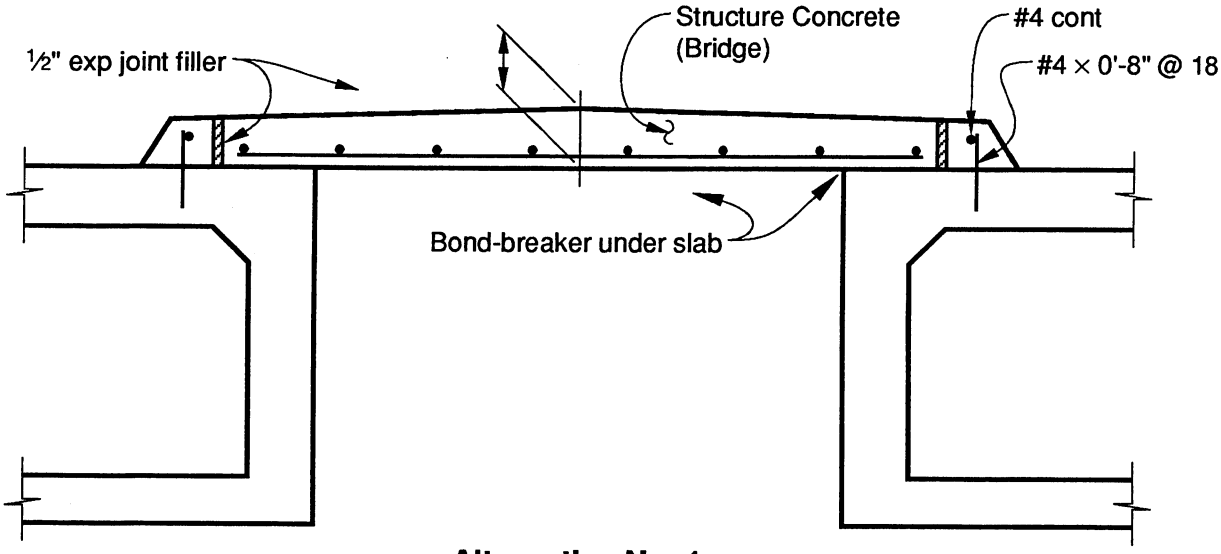

Alternative No. 1

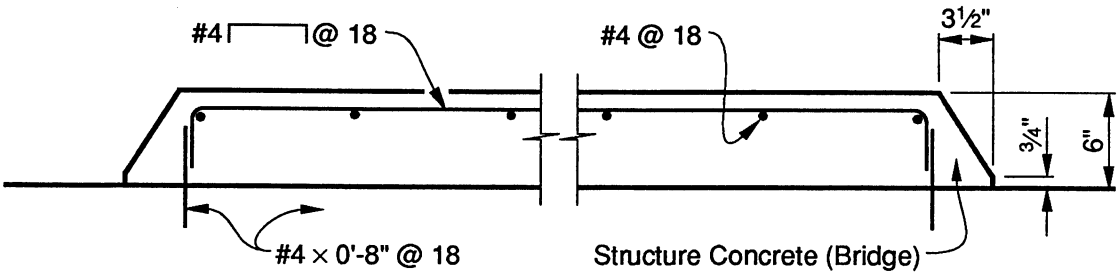

Alternative No. 2

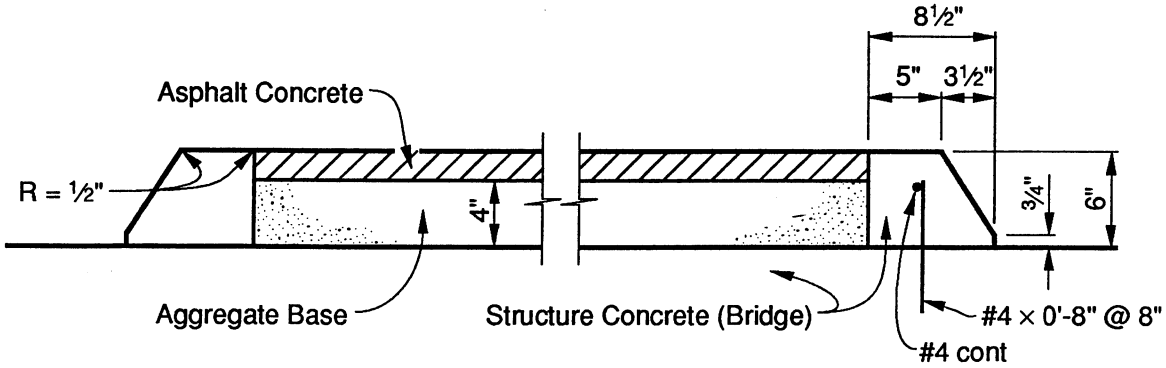

Alternative No. 3

Notes to Designer:

1. Special consideration should be given to longitudinal and transverse joints in the deck before using Alternative No. 3.
2. Alternative No. 3 is suitable primarily for medians with large areas.

Sidewalks

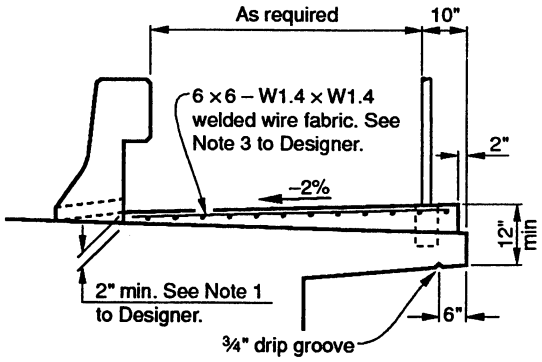

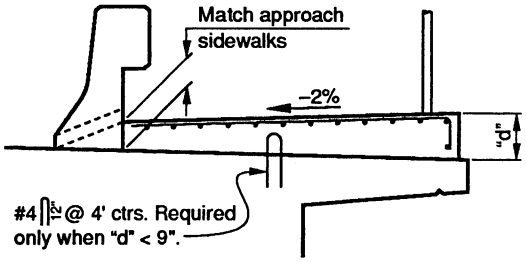

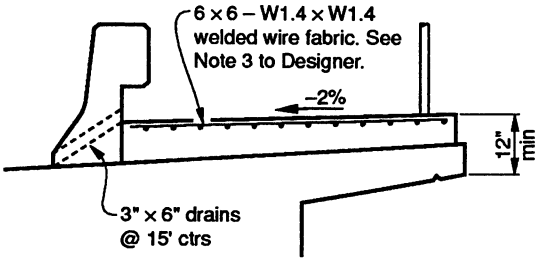

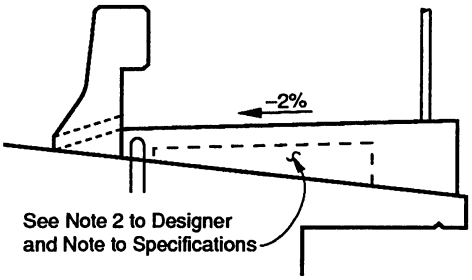

Notes to Detailer:

1. Details for all sections are similar unless noted otherwise.
2. Show following note on plans:

Note: Sidewalk joints to match size and spacing in concrete barrier.

Notes to Designer:

1. May be increase to prevent gutter flow backup.
2. Use void only if necessary to reduce dead load.
3. #4 @ 18 in both directions may be used in lieu of welded wire fabric. Designer to specify.

Note to Specifications:

*Form void with green or saturated lumber or other approved means of preventing swelling of forms.

For Sidewalks on Wingwalls see Abutments.

Barrier Railing Modification for Deck Overlays

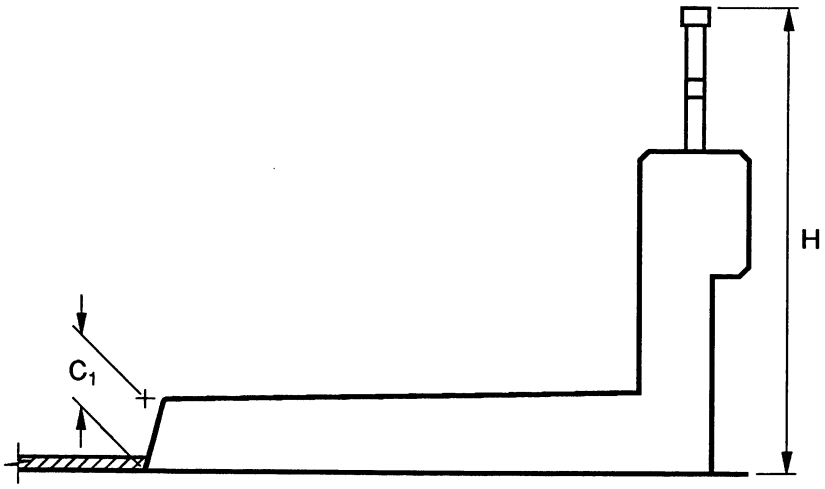

Type 26

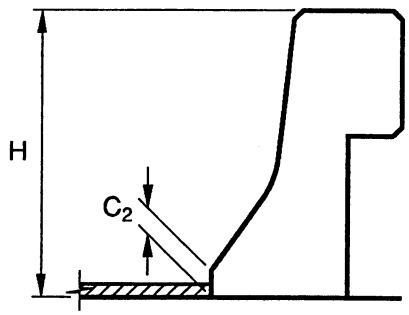

Type 25

When overlays placed on bridges as part of the *original construction*, the standard plan heights of barrier railings shall be adjusted as follows:

Notes to Detailer

1. For Type 26, increase over-all "H" by increasing standard curb height "C_1".
2. For Type 25, increase over-all "H" by increasing vertical "C_2".
3. Do not adjust barrier height for future overlay thickness.
4. Show "C_1" or "C_2" on bridge plans when overlay surfacing is required on the structure.

Railing Type	Overlay Thickness	Total Adjustment
Types 25, 26	Up to 1½" incl.	Standard H + 1½"
	1½" to 3" incl.	Standard H + 3"
	3" to 5" incl.*	Standard H + 5"*
	5" to 7" incl.*	Standard H + 7"*

*Height adjustment greater than 3" will require a revised design for barrier reinforcement and slab design.

Sidewalk Expansion Joint Armor

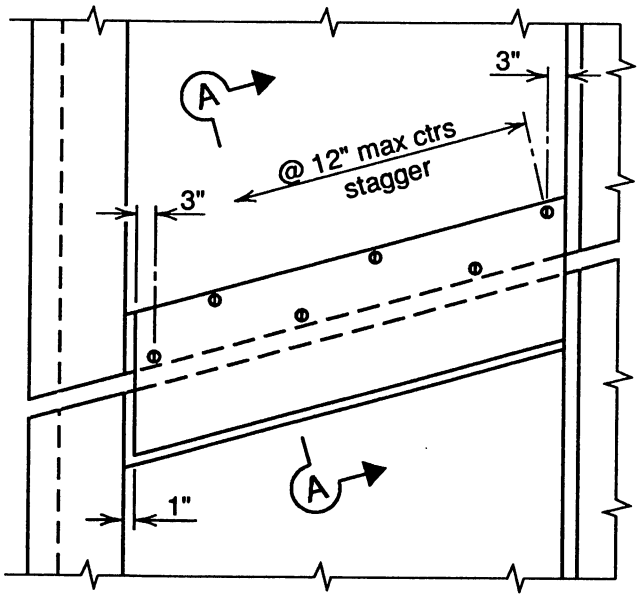

Skew ≤ 20°

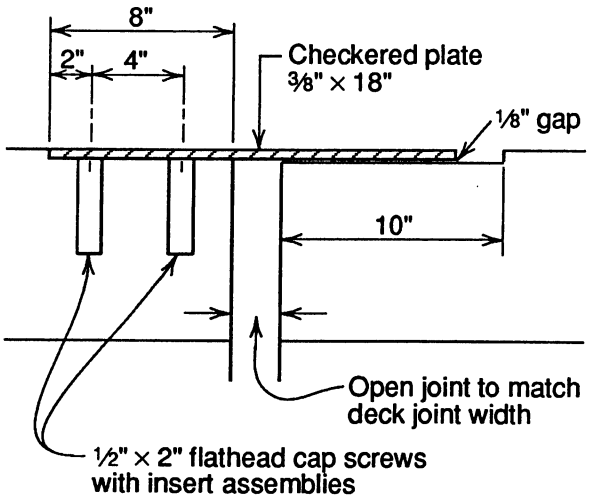

Section A-A

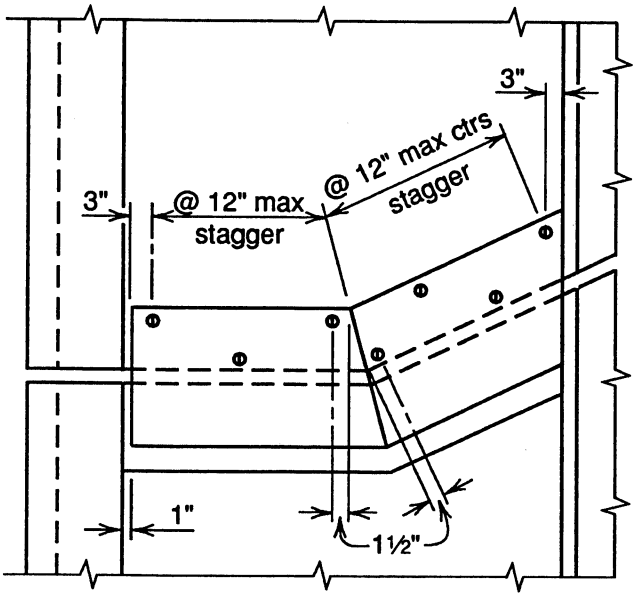

Skew > 20°

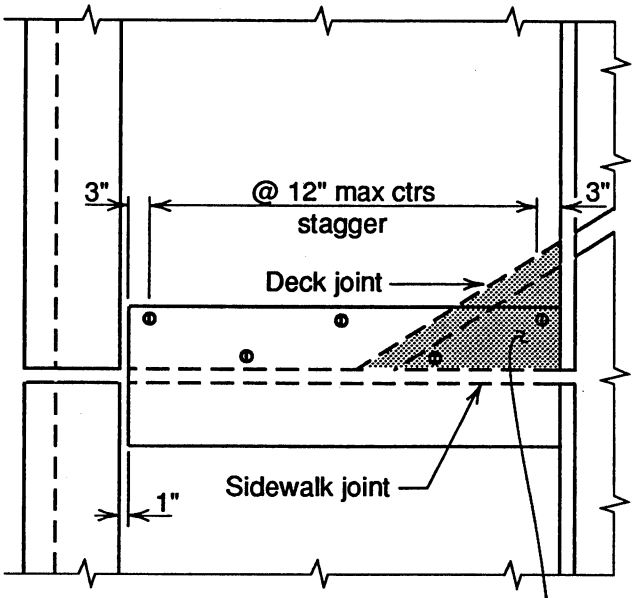

Use B0-13 / 13-1 on top of deck under sidewalk.
Use ½" expanded polystyrene.

Skew > 20° Alternate

PLAN

Note: Detail bolts to miss utilities when present in sidewalk.

Concrete Barrier Type 26 Cover Plate

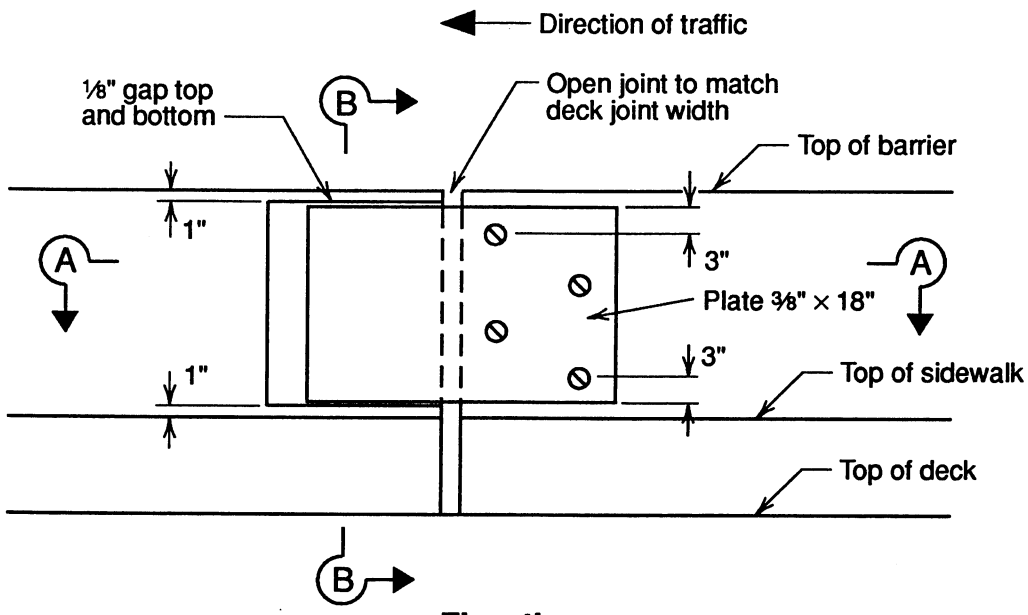

Elevation

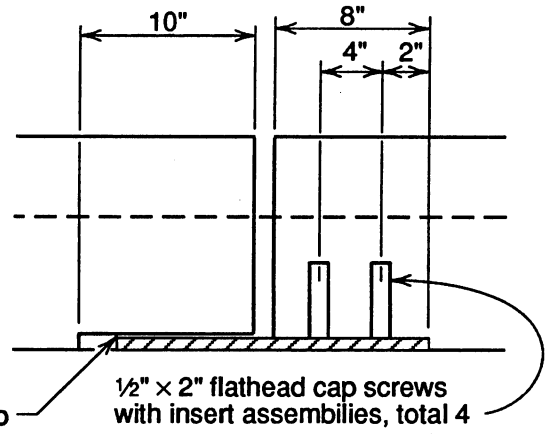

Section A-A

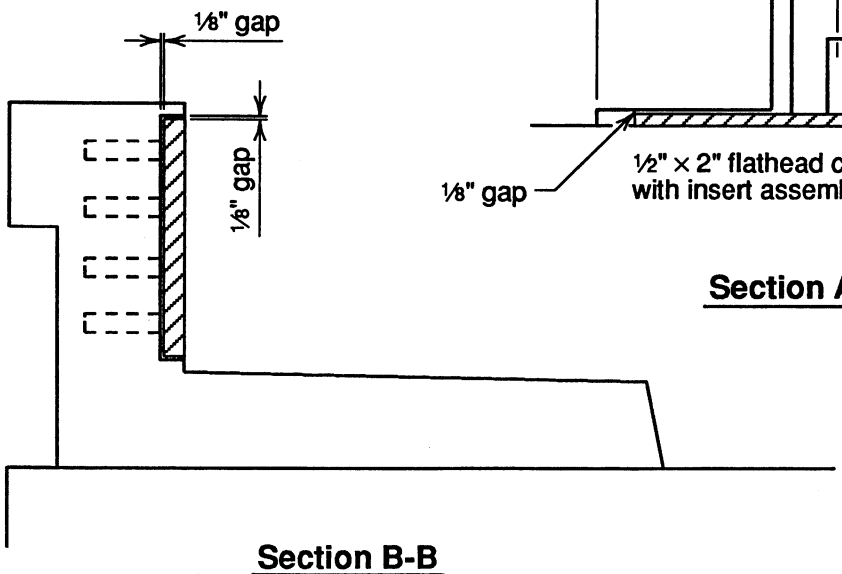

Section B-B

Concrete Expansion Dam

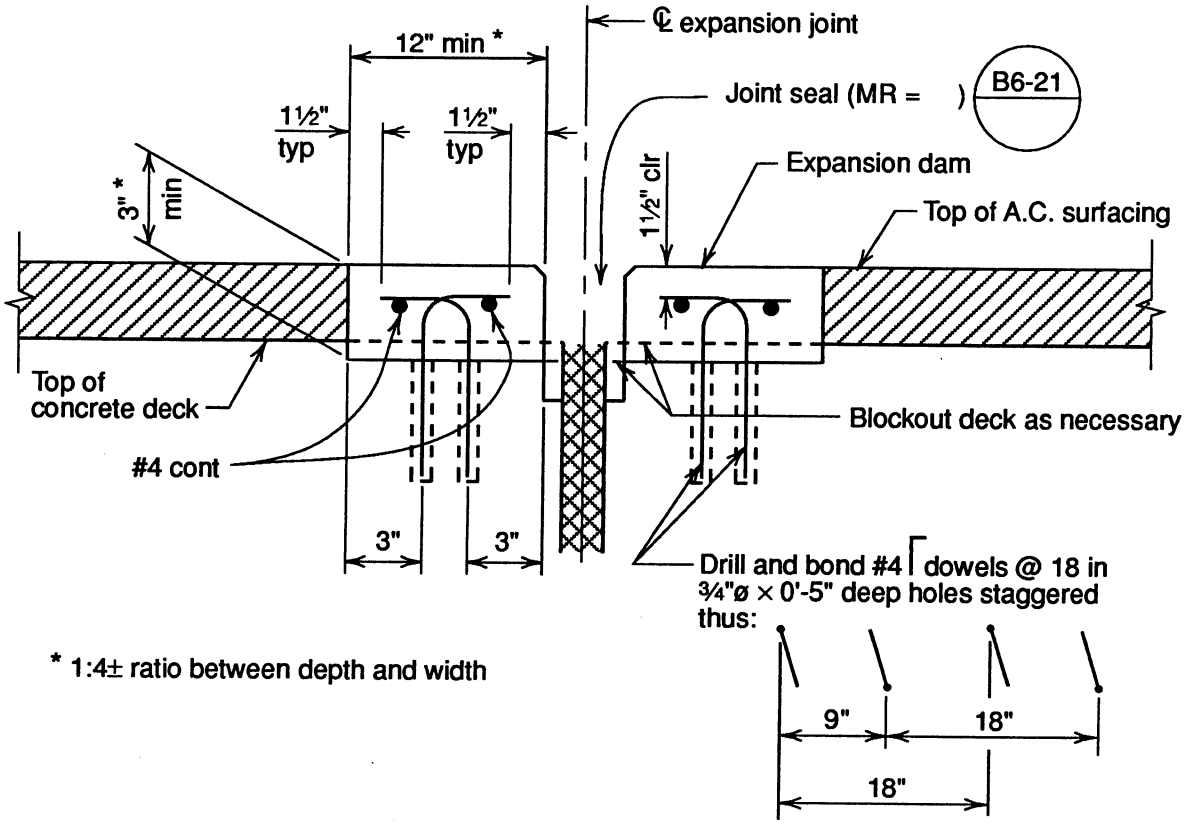

* 1:4± ratio between depth and width

Note: Dam to be constructed after A.C. has been placed continuous across blockout.

Notes to Designer: For use with joint seals of MR ≤ 2" where A.C. surfacing is required on new bridges.

Estimate exansion dams by the cubic foot. (Includes dowels)

Joint seal is a seperate item.

DETAILING EXAMPLE

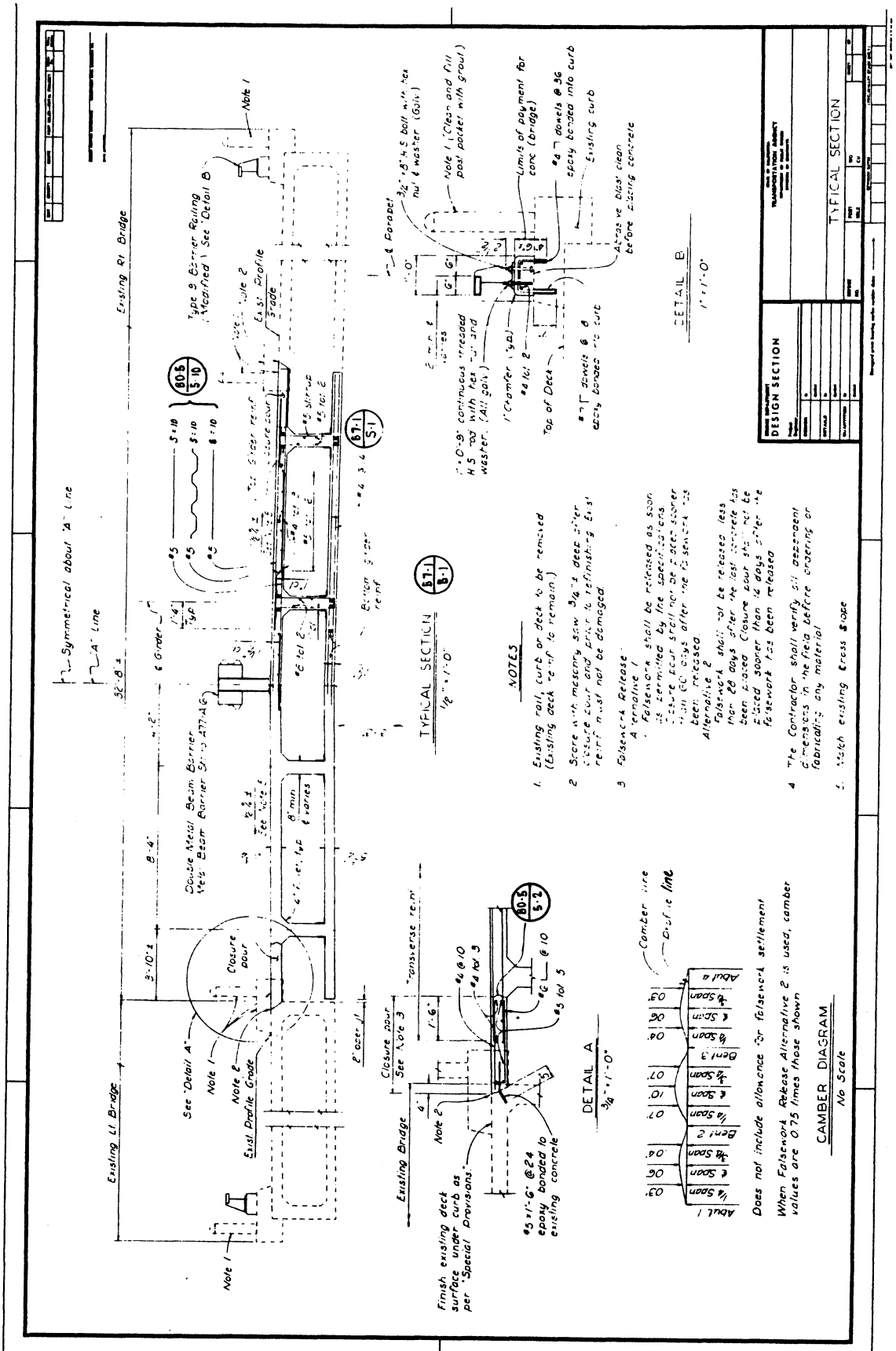

DETAILS SHOWN ARE FOR EXAMPLE ONLY
NOT TO BE USED FOR DESIGN PURPOSES