# Abutment Sheet Check List

## A. Plan

1. Place at top, left side of sheet, oriented the same as the General Plan. May be placed horizontal with face down for very long abutments.
2. Show North arrow.
3. Scale 1/4" = 1'-0" usual minimum. Use 1/8" = 1'-0" on large structures, but show less detail.
4. Abutment sheet may be omitted on simple diaphragm type abutments. Layout and Sections should be shown with the girder layout.
5. Check List:
   - Do not repeat stations or bearings shown on Foundation Plan.
   - Dimension along same layout line as is stationed on Foundation Plan.
   - Do not dimension piles from edges of footings.
   - Show only layout dimensions and pile spacing, others should be shown on larger details.
   - Avoid showing any reinforcement.

## B. Abutment Elevation

1. Place in front of Plan if "PLAN" is oriented the same as a General Plan, "ELEVATION" may be placed horizontal or looking normal to face of abutment.
2. May be omitted on simple diaphragm type abutments.
3. Rear elevations should be avoided.
4. Same scale as Plan
5. Check List:
   - Show location of weep holes. See Standard Plan B0-3, Bridge Detail 3-1. As an alternative, weep holes and geocomposite drain may be used. See *Bridge Design Details* manual page 6-22.
   - Show elevations on slope paving; exception, a constant dimension below soffit.
   - Do not attempt to show entire skewed wingwalls.
   - Do not show all piles. Note "All piles not shown."
   - It is not necessary to show railing.
   - Avoid detail dimensions.

## C. Wingwall Elevation

1. Projection of Abutment Plan if possible. Locate by section symbols if not a projection, or simply call out as WINGWALL ELEVATION.
2. Always show looking normal to wall.
3. Same scale as Plan, unless reinforcement is to be shown. A few bars may be shown at 1/4" = 1'-0", but usually reinforcement should not be shown at less than 3/8" = 1'-0".

4. Check List:
   - Call out standard plans and wall length.
   - Show finished earth or slope paving lines.
   - Wingwall layout dimensions to be shown in Plan view.
   - Show all piles.
   - Railing need not be shown.

## D. Sections and Details

1. Sections and details showing reinforcement should not be less than ⅜" = 1'-0" scale; preferred scale is ½" = 1'-0" minimum.
2. Plan of footing corners should be the same orientation as Plan view.
3. Sections should be oriented the same way as the view they are taken from.
4. Sections and details are to be taken from Plan, Elevation, or secondary views rather than from other *sections*.
5. Similar sections need not have all details repeated.
6. Do not shade or show aggregate in sections.
7. Abutment section call out joint seal and movement rating.

## E. Retaining Walls

1. Show all layout information along one layout line (usually the face of wall).
2. Do not show dimensions given on standard sheets.
3. Show top of wall details for railings, sidewalks, overhangs, etc.

# End Diaphragm Abutment

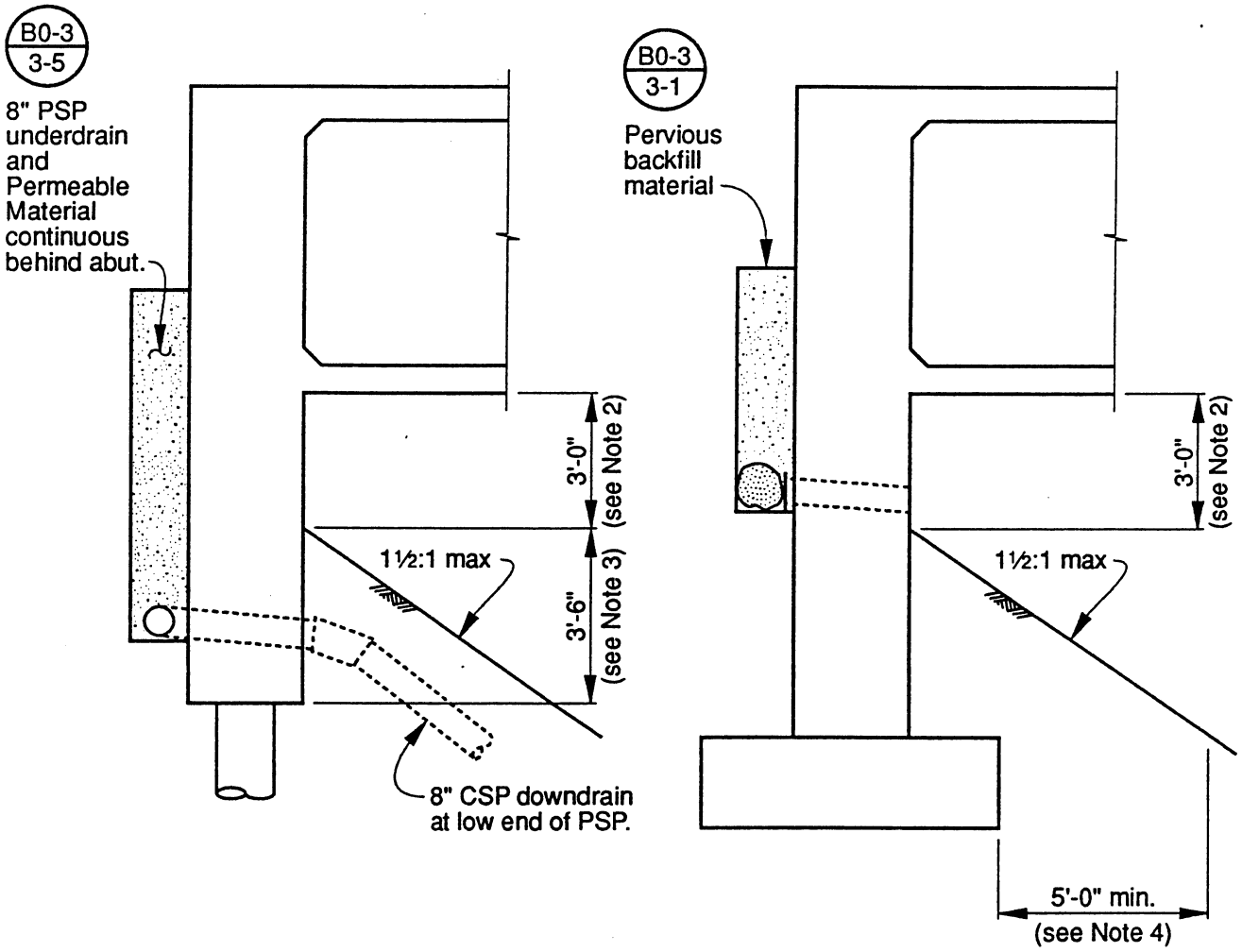


**Notes:**

1. Reinforce the abutment as shown on pages 1-2, 1-3, and 1-4 of the *Bridge Design Aids*.
2. The clearance between the top of slope and the soffit of the bridge should be about three feet, but may be as little as two feet or as much as four feet, depending upon individual circumstances. This dimension should be shown on the plans.
3. The bottom portion of an end diaphragm abutment on piles should be embedded a minimum of 3½ feet at the intersection of the slope and face of abutment.
4. For end diaphragm abutments on spread footings, the horizontal clearance from the top of footing to the face of slope should be five feet minimum.
5. Continuous pervious backfill material and drains or perforated pipe with permeable material shall be placed in accordance with the instructions in Memo to Designers 5-2. Note that permeable material is only specified when known water bearing material is present behind the abutment.
6. Weep Hole and Geocomposite Drains, Bridge Design Details 6-22, which is an alternative to Bridge Detail B0-3/3-1, should be added to the plans for abutments without structure approaches.
7. End slopes at abutments shall be 1½ to 1 or flatter except under very unusual circumstances.

# Weep Hole and Geocomposite Drain

**Alternative to Bridge Detail** BO-3 / 3-1

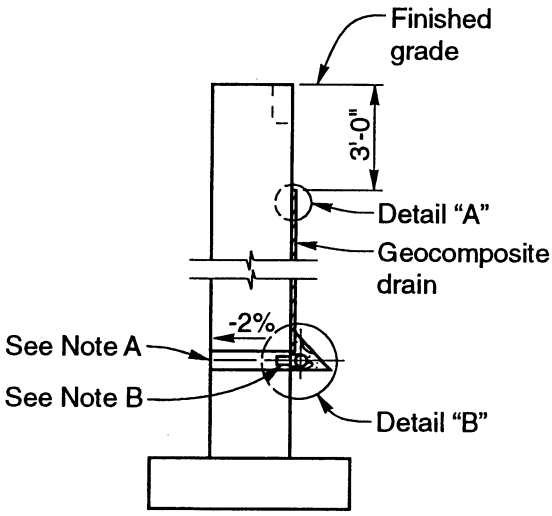


**Wall Section**

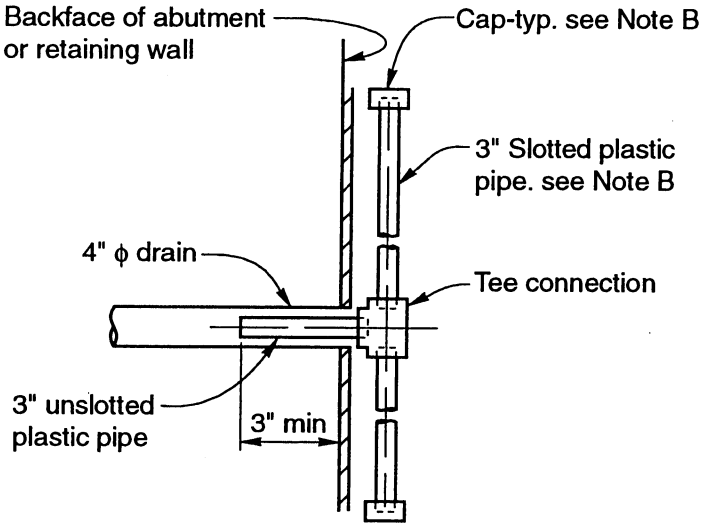


**Section A-A**

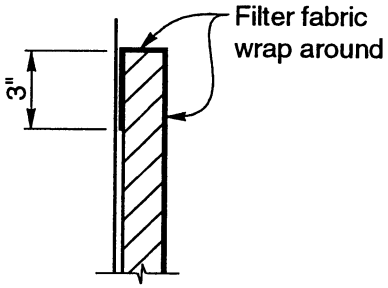


**Detail "A"**

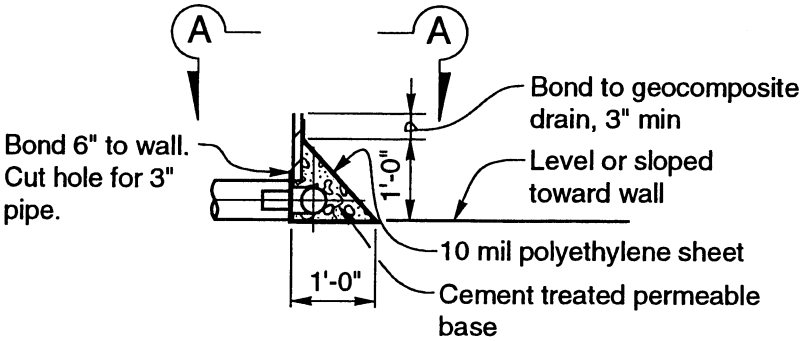


**Detail "B"**

Notes:

A. 4" drains at intermediate sag points and at 25' max. center to center (9' c-c for Type 3 and 9'-3" c-c for Type 4 retaining walls). For walls adjacent to sidewalks or curbs, provide 4" plastic pipe under sidewalk to discharge through curb face. Exposed wall drains shall be located 3"± above finished grade.

B. Geocomposite drain, cement treated permeable base, and 3" ϕ slotted plastic pipe continuous behind retaining wall or abutment. Cap ends of pipe. Provide "Tee" connection at each 4" ϕ drain.

C. Connect the low end of plastic pipe to the main outlet pipe as applicable.

# STIRRUP REINFORCEMENT AT ABUTMENTS

## (Sloping Exterior Girder)

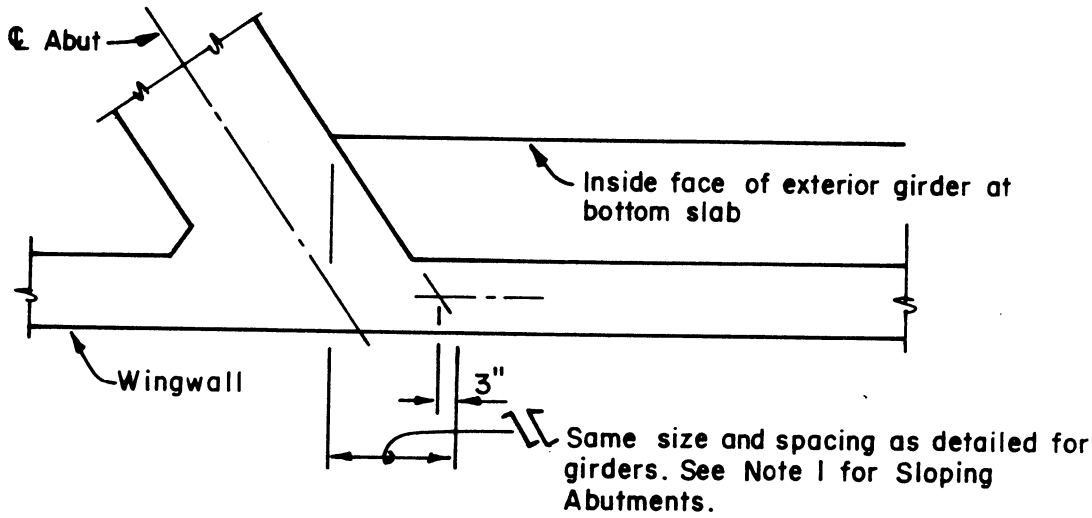


ACUTE ABUTMENT CORNER

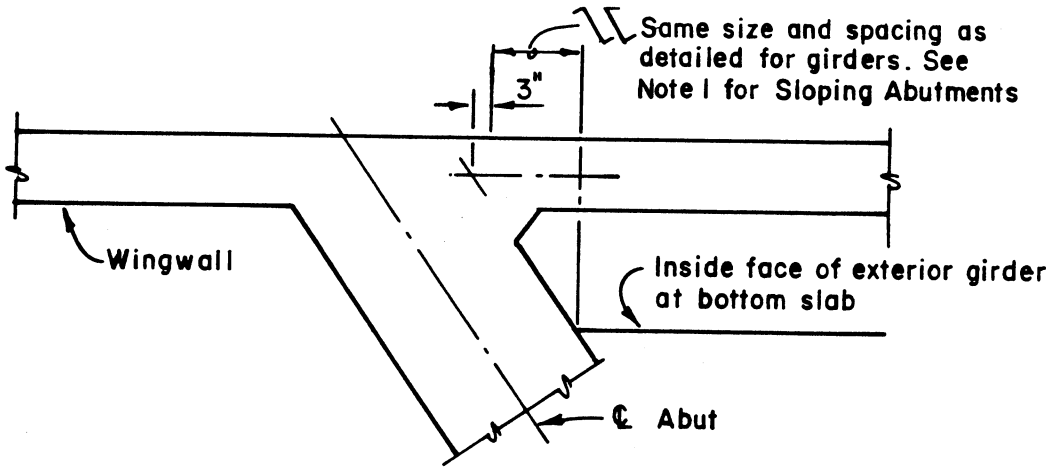


OBTUSE ABUTMENT CORNER

Notes:

1. Additional stirrups or equivalent reinforcing may be required for sloping abutment face.
2. Consideration should be given to potential conflicts when accomodating prestressing flares and assemblies.
3. These details should be shown in addition to requirements on Standard Plans B6-1 and B7-1

## BOX GIRDER DIAPHRAGM – SLAB REINFORCEMENT

For Skews Greater Than 20°

At the junction of the bottom slab and end diaphragm of seat-type abutments, for skews greater than 20°, rebar clearance problems may be encountered. The slab thickness may not be adequate to accommodate the "stacking" of longitudinal and transverse slab bars, diaphragm stirrups, and diaphragm bottom bars.

Possible solutions are shown below.

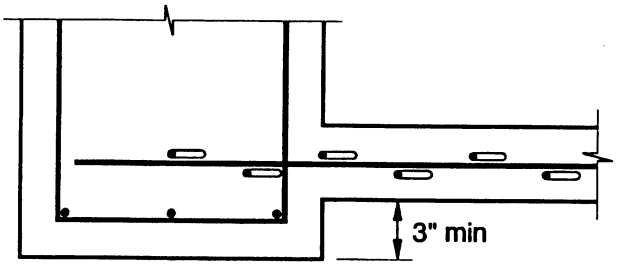


REINFORCED CONCRETE

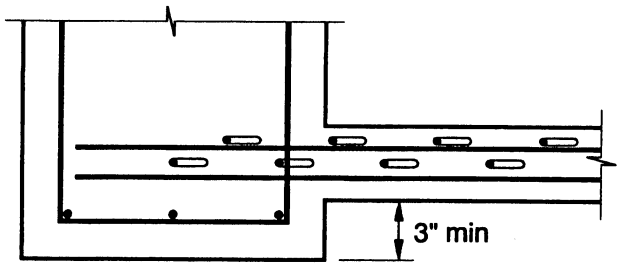


PRESTRESSED CONCRETE

### DROP–DIAPHRAGM ALTERNATIVE

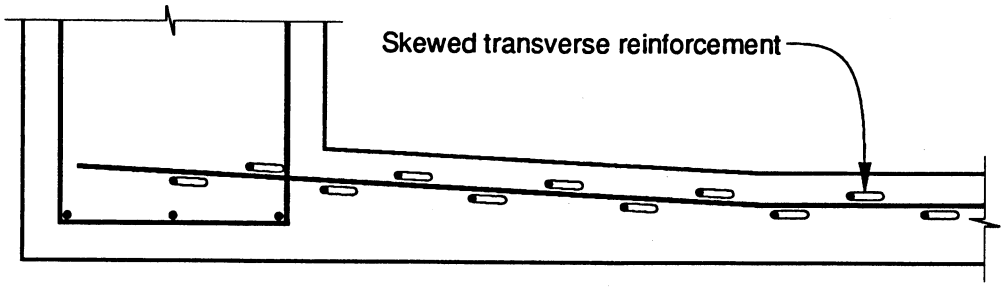


REINFORCED (Shown) — PRESTRESSED (Similar)

### FLARED SLAB ALTERNATIVE

Note: Use in conjunction with page 8-32, *Bridge Design Details.*

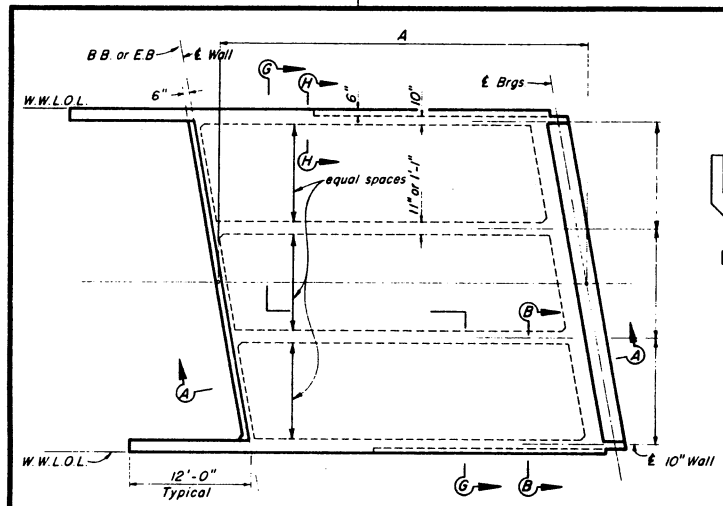


PLAN

Notes:

Add Curb and Railing as required.
For sections not shown, see "Abutment Details" sheet.
This sheet illustrates how a typical "Abutment Layout" sheet should be made.
The information for girder reinforcement and a tabulation of dead loads for determining number of piles or sizes of spread footings are not to be placed on the "Abutment Layout" sheet that goes into a set of plans.

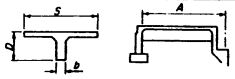


GIRDER D.L.
kips

| | b = 1'-1" | | | | b = 1'-7" | | | | | | |
|---|---|---|---|---|---|---|---|---|---|---|---|
| | D = 3'-0" | | | | D = 4'-0" | | | | D = 5'-0" | | |
| A | 20 | 24 | 28 | 32 | 36 | 40 | 44 | 48 | 52 |
| S 8'-0" | 16.4 | 20.4 | 24.4 | 34.6 | 39.5 | 44.3 | 55.7 | 61.3 | 66.7 |
| 9'-0" | 18.6 | 23.2 | 27.8 | 38.5 | 44.0 | 49.4 | 61.5 | 67.3 | 73.3 |
| 10'-0" | 20.7 | 25.8 | 30.9 | 42.4 | 48.4 | 54.3 | 66.9 | 73.5 | 80.0 |
| 11'-0" | 22.7 | 28.3 | 34.6 | 46.3 | 53.0 | 59.5 | 72.8 | 80.0 | 87.2 |

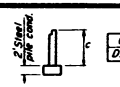


BACK WALL
kips/ft

| C | 5 | 6 | 7 |
|---|---|---|---|
| DL | 1.65 | 1.80 | 1.95 |

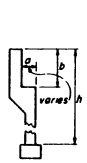


| h | 20 | 21 | 22 | 23 | 24 | 25 | 26 | 27 | 28 | 29 | 30 |
|---|---|---|---|---|---|---|---|---|---|---|---|
| DL | 6.00 | 6.22 | 6.44 | 6.66 | 6.88 | 7.10 | 7.32 | 7.54 | 7.76 | 7.98 | 8.20 |

a. 2'-0" used
2'-2" add 0.10 Kips/ft.
2'-4" add 0.22 Kips/ft.
2'-6" add 0.32 Kips/ft.

b. 5'-6" Used - for each 1.0' decrease in "b" add 0.08 k/ft
for each 1.0' increase in "b" subtract 0.08 k/ft.

FRONT WALL
kips/ft

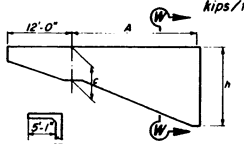


SECTION W-W

| h | A | C = 5' | | | C = 6' | | | C = 7' | | |
|---|---|---|---|---|---|---|---|---|---|---|
| | | 24 | 28 | 28 | 32 | 36 | 40 | 40 | 44 | 48 | 52 |
| 20' | Front | 29.1 | 34.3 | 34.7 | 39.8 | 44.9 | 49.2 | 50.7 | 56.2 | 61.1 | 66.4 |
| | Rear | 32.4 | 36.1 | 39.1 | 43.1 | 47.3 | 51.4 | 54.9 | 59.6 | 63.8 | 68.3 |
| 25' | Front | | | | 47.1 | 53.1 | 59.1 | 60.0 | 66.2 | 71.9 | 78.0 |
| | Rear | | | | 46.7 | 51.6 | 56.1 | 59.6 | 64.2 | 69.4 | 74.4 |
| 30' | Front | | | | | | 68.3 | 69.1 | 76.2 | 82.8 | 89.8 |
| | Rear | | | | | | 60.8 | 64.2 | 69.5 | 75.1 | 80.4 |

Note: One wall and slab, rail not included. Slab using 11'-0" girder spacing.

SIDE WALL
kips

## ABUTMENT DEAD LOAD

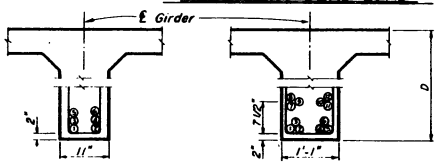


GIRDER REINFORCEMENT
no scale

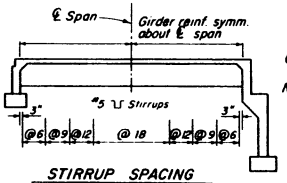


STIRRUP SPACING
no scale

| SPAN | FEET |
|---|---|
| 20 | .00 |
| 24 - 32 | .01 |
| 36 - 44 | .02 |
| 48 | .03 |
| 52 | .04 |

GIRDER DEFLECTIONS

Note. Total deflection will be reached about 4 years after falsework removal. For inital deflections after falsework removal, divide values shown by three.

| | A | D | 9'-0" Girder Spacing (1) | (2) | (3) | (4) | (5) | (6) | (7) | (8) | (9) | (10) | (11) | (12) | Tot #/l | 11'-0" Girder Spacing (1) | (2) | (3) | (4) | (5) | (6) | (7) | (8) | (9) | (10) | (11) | (12) | Tot #/l | #5 Stirrup Spacing |
|---|---|---|---|---|---|---|---|---|---|---|---|---|---|---|---|---|---|---|---|---|---|---|---|---|---|---|---|---|---|
| 11" Stem | 20 | 3'-0" | Same Reinf. as 11'-0" Spc. if used | | | | | | | | | | | | | Cont | Cont | Cont | Cont | | | | | | | | | 4 | 2@9 2@12 @18 |
| | 24 | 3'-0" | Cont | Cont | Cont | Cont | | | | | | | | | 4 | Cont | Cont | Cont | Cont | 16 | 16 | | | | | | | 6 | 3@9 3@12 @18 |
| | 28 | 3'-0" | Cont | Cont | Cont | Cont | 16 | 16 | | | | | | | 6 | Cont | Cont | Cont | Cont | Cont | Cont | | | | | | | 6 | 3@6 4@9 3@12 @18 |
| | 32 | 4'-0" | Cont | Cont | 18 | Cont | Cont | 18 | | | | | | | 6 | Cont | Cont | 22 | Cont | Cont | 22 | | | | | | | 6 | 3@12 @18 |
| | 36 | 4'-0" | Cont | Cont | 24 | Cont | Cont | 24 | | | | | | | 6 | Cont | Cont | 26 | Cont | Cont | 26 | 16 | | | | 16 | | 8 | 2@9 3@12 @18 |
| 1'-1" Stem | 40 | 4'-0" | Cont | Cont | 32 | Cont | Cont | 32 | 20 | | | | 20 | | 8 | Cont | Cont | 32 | Cont | Cont | 32 | 24 | | | | 24 | | 8 | 4@9 4@12 @18 |
| | 44 | 5'-0" | Cont | Cont | 34 | Cont | Cont | 34 | | | | | | | 6 | Cont | Cont | 36 | Cont | Cont | 36 | 24 | | | | 24 | | 8 | 5@12 @18 |
| | 48 | 5'-0" | Cont | Cont | 40 | Cont | Cont | 40 | 30 | | | | 30 | | 8 | Cont | Cont | 40 | Cont | Cont | 40 | 32 | 20 | | | 32 | | 10 | 2@9 5@12 @18 |
| | 52 | 5'-0" | Cont | Cont | 38 | Cont | Cont | 38 | Cont | 24 | | | Cont | 24 | 10 | Cont | Cont | 40 | Cont | Cont | 40 | Cont | 30 | 16 | 16 | Cont | 30 | 12 | 4@9 5@12 @18 |
| | | | Total length of bars given | | | | | | | | | | | | | | | | | | | | | | | | | | |

GIRDER REINFORCEMENT

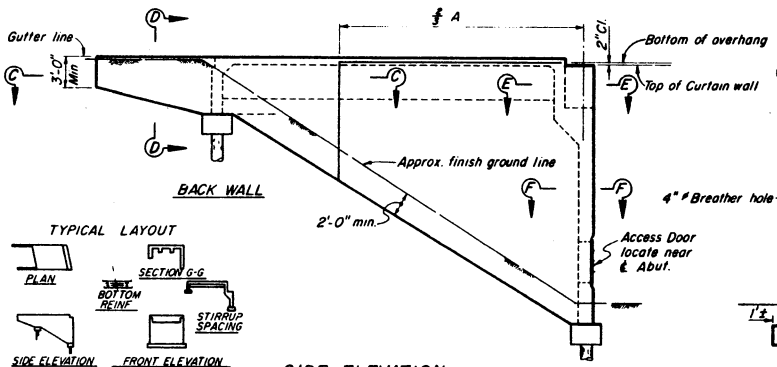


BACK WALL

TYPICAL LAYOUT




SIDE ELEVATION

FRONT WALL

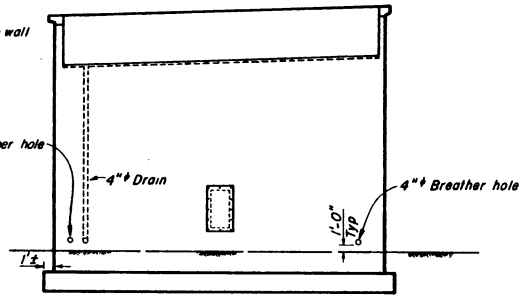


FRONT ELEVATION

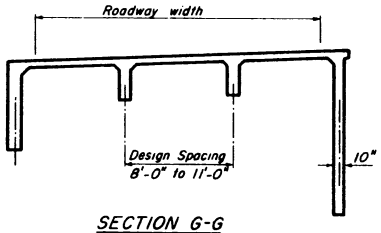


SECTION G-G

**BRIDGE DESIGN DETAILS September 1985 6-40**

State of CALIFORNIA DEPARTMENT OF TRANSPORTATION
DIVISION OF STRUCTURES STRUCTURE DESIGN

BIN TYPE ABUTMENT LAYOUT

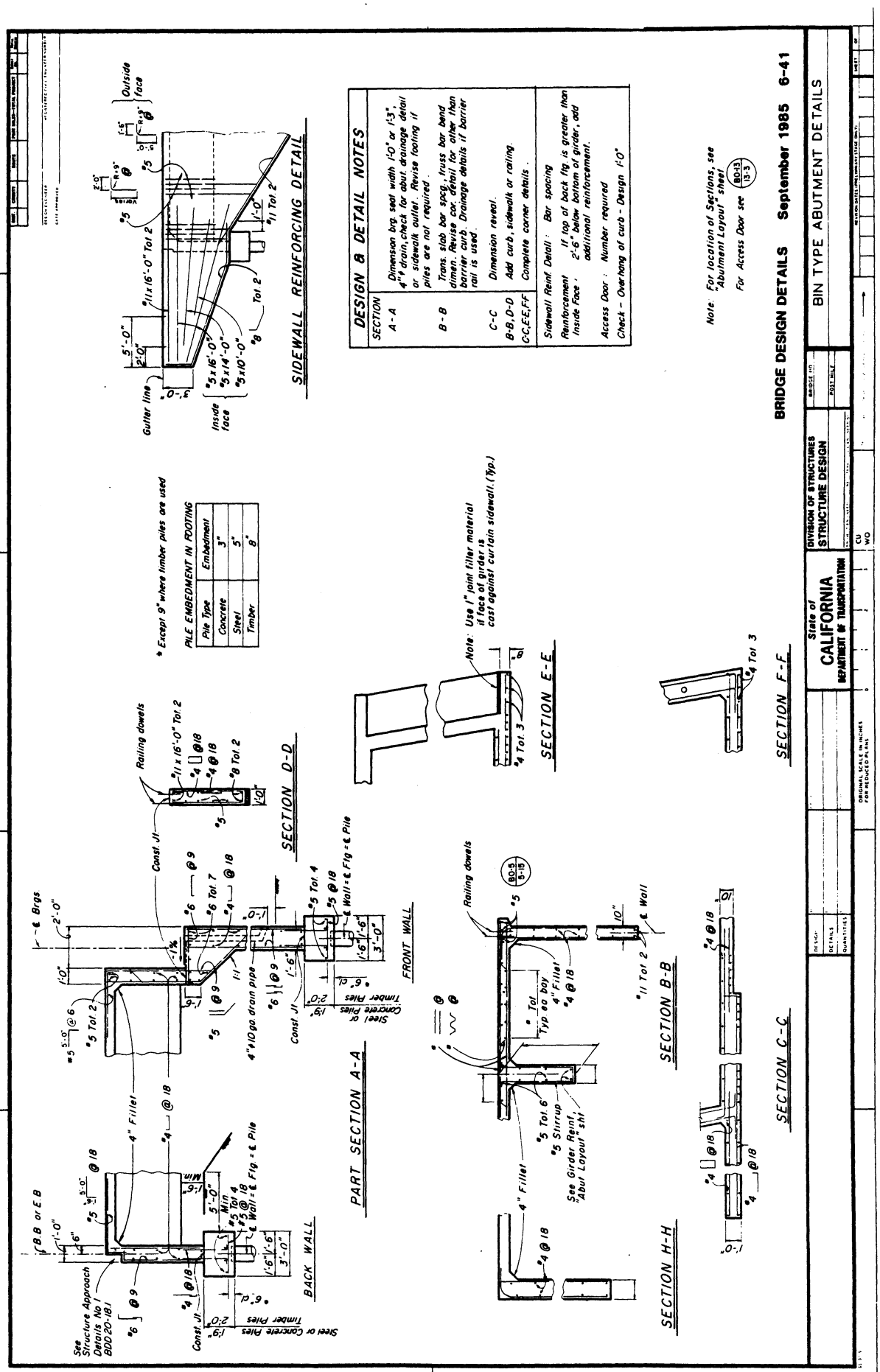
SIDEWALL REINFORCING DETAIL
DESIGN & DETAIL NOTES
SECTION
A-A
Dimension brg. seat width 1'-0" or 1'-3". 4"ø drain, check for abut. drainage detail or sidewalk outlet. Revise footing if piles are not required.
B-B
Trans. slab bar spcg., truss bar bend dimen. Revise cor. detail for other than barrier curb. Drainage details if barrier rail is used.
C-C
Dimension reveal.
B-B, D-D
Add curb, sidewalk or railing.
C-C, E-E, F-F
Complete corner details.
Sidewalk Reinf. Detail: Bar spacing
Reinforcement Inside Face: If top of back ftg. is greater than 2'-6" below bottom of girder, add additional reinforcement.
Access Door: Number required
Check - Overhang of curb - Design 1'-0"
Note: For location of Sections, see "Abutment Layout" sheet
For Access Door see B0-13 13-3
BRIDGE DESIGN DETAILS September 1985 6-41
BIN TYPE ABUTMENT DETAILS
State of CALIFORNIA DEPARTMENT OF TRANSPORTATION
DIVISION OF STRUCTURES STRUCTURE DESIGN
* Except 9" where timber piles are used
PILE EMBEDMENT IN FOOTING
Pile Type | Embedment
Concrete | 3"
Steel | 5"
Timber | 8"
SECTION D-D
SECTION E-E
SECTION F-F
SECTION B-B
SECTION C-C
SECTION H-H
PART SECTION A-A
FRONT WALL
BACK WALL
Railing dowels
Const. Jt.
4" Fillet
4" x 10 ga drain pipe
Steel or Concrete Piles
Timber Piles
See Structure Approach Details No 1 BDD 20-18.1
Note: Use 1" joint filler material if face of girder is cast against curtain sidewall. (Typ.)
See Girder Reinf. "Abut Layout" sht.
Typ. as bay
Gutter line
Inside face
Outside face

# CANTILEVER ABUTMENT — SPREAD FOOTING

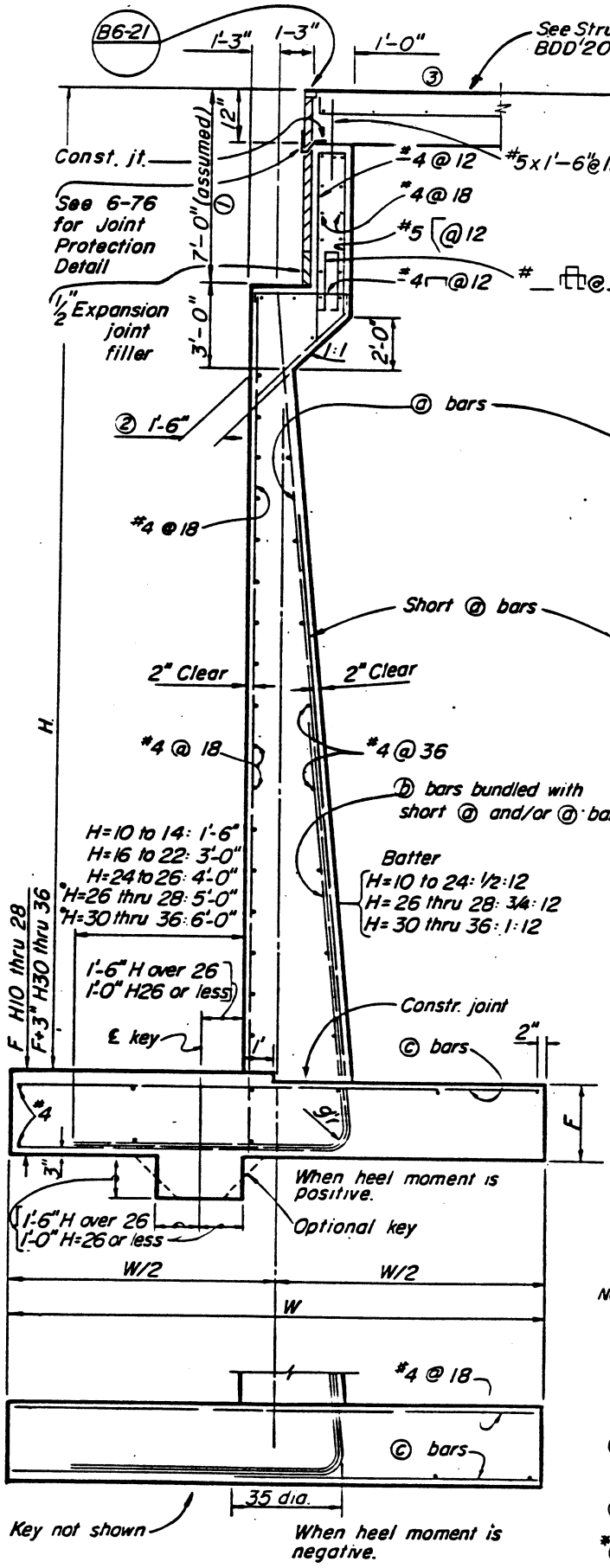


TYPICAL SECTION

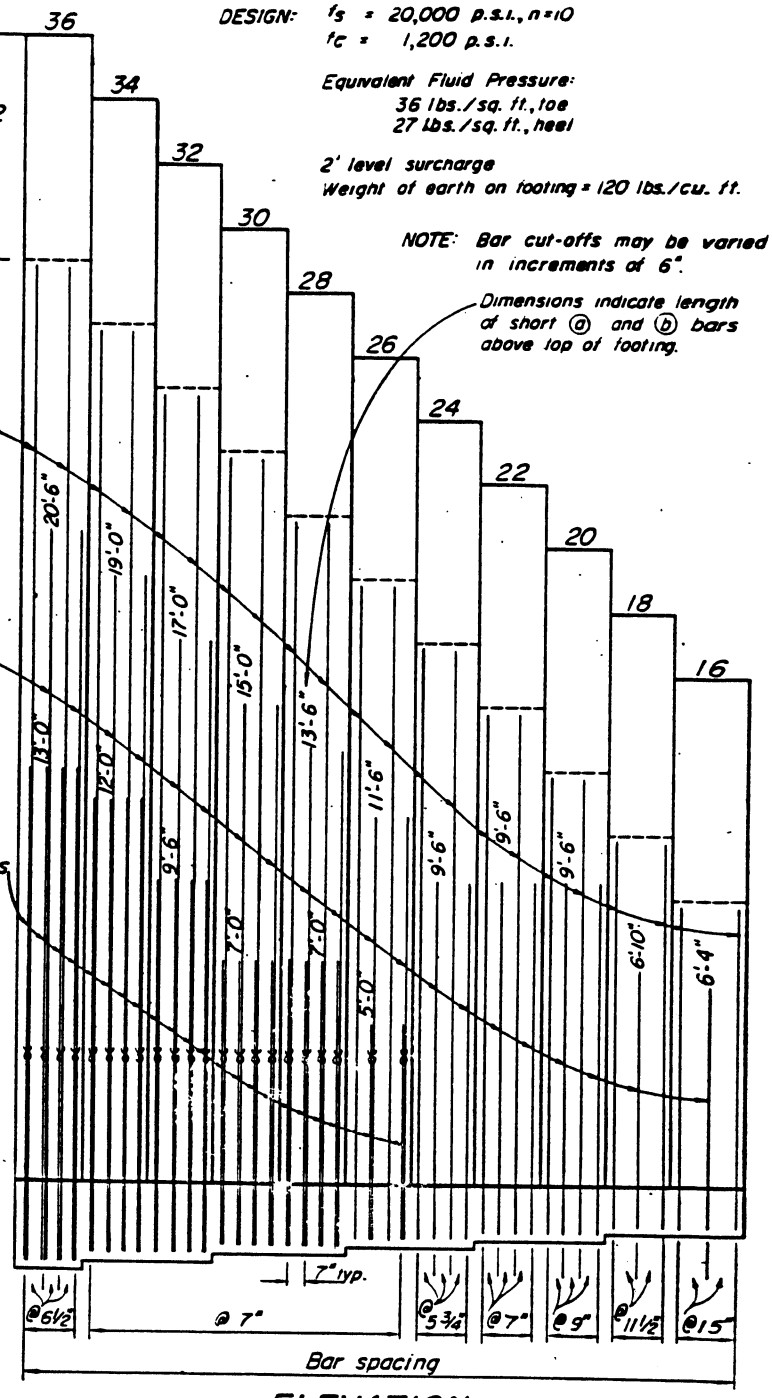


ELEVATION

GENERAL NOTES

DESIGN: $f_s$ = 20,000 p.s.i., n=10
$f_c$ = 1,200 p.s.i.

Equivalent Fluid Pressure:
36 lbs./sq. ft., toe
27 lbs./sq. ft., heel

2' level surcharge
Weight of earth on footing = 120 lbs./cu. ft.

NOTE: Bar cut-offs may be varied in increments of 6".

Dimensions indicate length of short ⓐ and ⓑ bars above top of footing.

NOTE:
Key to be used except when found unnecessary by the Engineer.

① Abutment shaft is proportioned for 7'-0" deep seat. For any depth over 7'-0", the top of stem dimension ② should be increased by the amount of batter for every foot increase in depth.

③ When approach slab is not required, extend 1' thick backwall to top of deck.

*ⓐ and ⓑ bundle bars.

For lower walls, see table.

H _____ ft.
W _____ ft.
F _____ ft.
As _____ sq.in./l.f.
V _____ kips
$P_r$ _____ kips/s.f.
Mom _____ ft. kips

# CANTILEVER ABUTMENT - SPREAD FOOTING

| | | | | | Shaft @ top of ftg. | | | APPLIED SUPERSTRUCTURE LOAD IN KIPS PER FT. | | | | | | | | | | | | | | | | |
|---|---|---|---|---|---|---|---|---|---|---|---|---|---|---|---|---|---|---|---|---|---|---|---|---|
| | | | ΣM @ ℄ Brg | ΣV with 0 Supstr | | As | | 0 | | | | 5 | | | | 7.5 | | | | 10 | | | | |
| H | W | F | | | Mom. | a bars | b bars | toe Pr. | toe Mom. | heel Mom. | heel As c bars | toe Pr. | toe Mom. | heel Mom | heel As c bars | toe Pr. | toe Mom. | heel Mom. | heel As c bars | toe Pr. | toe Mom. | heel Mom. | heel As c bars | H |
| 10 | 6 | 1.5 | -9.40 | 5.42 | 9.60 | 0.42 #8 @18 | | 2.47 | -2.62 | +4.37 | 0.19 #5@18 | 3.31 | -3.89 | +1.21 | 0.05 #4@18 | 3.72 | -4.52 | -1.84 | 0.08 #4@18 | 4.14 | -5.17 | -3.44 | 0.15 #5@18 | 10 |
| 12 | 7 | 1.5 | -13.7 | 7.72 | 15.55 | 0.64 #9@18 | | 2.78 | -4.88 | +7.58 | 0.33 #7@18 | 3.50 | -6.70 | +3.99 | 0.17 #5@18 | 3.85 | -7.59 | +2.22 | 0.10 #4@18 | 4.21 | -8.50 | -2.01 | 0.09 #4@18 | 12 |
| 14 | 8 | 1.5 | -19.0 | 10.25 | 23.50 | 0.91 #11@18 | | 3.06 | -8.33 | +11.35 | 0.49 #8@18 | 3.69 | -10.70 | +7.33 | 0.32 #7@18 | 4.00 | -11.89 | +5.37 | 0.23 #6@18 | 4.31 | -13.06 | +3.33 | 0.14 #5@18 | 14 |
| 16 | 9 | 1.5 | -25.4 | 13.05 | 33.80 | 1.24 #11@15 | | 3.33 | -12.66 | +16.03 | 0.70 #9@15 | 3.89 | -15.60 | +11.57 | 0.50 #8@15 | 4.16 | -17.04 | +9.39 | 0.41 #7@15 | 4.44 | -18.51 | +7.05 | 0.31 #6@15 | 16 |
| 18 | 10 | 1.5 | -32.9 | 16.08 | 46.65 | 1.62 #11@11½ | | 3.59 | -18.19 | +21.73 | 0.94 #9@11½ | 4.08 | -21.72 | +16.84 | 0.73 #8@11½ | 4.34 | -23.50 | +14.41 | 0.63 #7@11½ | 4.59 | -25.30 | +11.94 | 0.52 #7@11½ | 18 |
| 20 | 11 | 1.75 | -44.3 | 19.76 | 62.40 | 2.06 #11@9 | | 3.99 | -26.60 | +29.46 | 1.08 #9@9 | 4.44 | -30.66 | +24.15 | 0.88 #8@9 | 4.67 | -32.75 | +21.50 | 0.79 #7@9 | 4.90 | -34.83 | +18.88 | 0.69 #7@9 | 20 |
| 22 | 12 | 1.75 | -55.8 | 23.33 | 81.30 | 2.56 #11@7 | | 4.27 | -35.42 | +37.70 | 1.38 #9@7 | 4.68 | -40.14 | +31.93 | 1.17 #11@14 | 4.90 | -42.56 | +28.97 | 1.06 #11@14 | 5.10 | -44.84 | +26.21 | 0.96 #10@14 | 22 |
| 24 | 13 | 2.00 | -71.7 | 27.62 | 103.7 | 3.13 #11@5¼ | | 4.67 | -47.39 | +48.85 | 1.54 #11@11½ | 5.06 | -52.73 | +42.62 | 1.35 #11@11½ | 5.25 | -55.31 | +39.60 | 1.25 #10@11½ | 5.44 | -57.95 | +36.52 | 1.15 #10@11½ | 24 |
| 26 | 14 | 2.00 | -86.2 | 31.77 | 129.8 | 3.38 #11@7 | #9@14 | 4.90 | -60.51 | +53.7 | 1.74 #9@7 | 5.26 | -66.44 | +49.0 | 1.64 #9@7 | 5.44 | -69.37 | +45.8 | 1.53 #9@7 | 5.61 | -72.28 | +42.0 | 1.40 #9@7 | 26 |
| 28 | 15 | 2.25 | -107.2 | 36.74 | 159.3 | 3.93 #11@7 | #8@7 | 5.32 | -77.10 | +67.2 | 1.96 #10@7 | 5.65 | -83.62 | +61.0 | 1.77 #9@7 | 5.82 | -86.88 | +59.2 | 1.73 #9@7 | 5.98 | -90.09 | +56.5 | 1.65 #9@7 | 28 |
| 30 | 16 | 2.25 | -126.1 | 41.48 | 194.4 | 3.89 #11@7 | #8@7 | 5.55 | -94.25 | +70.1 | 2.19 #10@7 | 5.86 | -101.39 | +64.3 | 1.86 #10@7 | 6.01 | -104.91 | +61.7 | 1.80 #10@7 | 6.17 | -108.69 | +59.7 | 1.74 #10@7 | 30 |
| 32 | 17 | 2.50 | -152.5 | 47.21 | 233.5 | 4.40 #11@7 | #9@7 | 5.94 | -116.15 | +83.3 | 2.16 #10@7 | 6.23 | -123.80 | +77.4 | 2.00 #10@7 | 6.38 | -127.73 | +74.3 | 1.93 #10@7 | 6.52 | -131.63 | +71.4 | 1.85 #10@7 | 32 |
| 34 | 18 | 2.50 | -176.5 | 52.58 | 277.4 | 4.97 #11@7 | #11@7 | 6.19 | -139.21 | +96.5 | 2.50 #11@7 | 6.47 | -147.62 | +89.6 | 2.32 #11@7 | 6.61 | -151.82 | +87.2 | 2.25 #11@7 | 6.75 | -156.02 | +84.1 | 2.17 #10@7 | 34 |
| 36 | 19 | 2.75 | -209.1 | 58.94 | 326.6 | 5.55 #11@6½ | #11@6½ | 6.55 | -166.91 | +111.6 | 2.60 #11@6½ | 6.82 | -175.92 | +105.1 | 2.43 #11@6½ | 6.95 | -180.35 | +103.5 | 2.36 #11@6½ | 7.09 | -184.94 | +101.2 | 2.28 #10@6½ | 36 |

| | APPLIED SUPERSTRUCTURE LOAD IN KIPS PER FT. | | | | | | | | | | | | | | | | QUANTITIES | | | | | | | | |
|---|---|---|---|---|---|---|---|---|---|---|---|---|---|---|---|---|---|---|---|---|---|---|---|---|---|
| | 12.5 | | | | 15 | | | | 17.5 | | | | 20 | | | | | Bar Reinforcing Steel (lbs./ft.) Applied Superstructure Load | | | | | | | | |
| H | toe Pr. | toe Mom | heel Mom | heel As c bars | toe Pr. | toe Mom | heel Mom. | heel As c bars | toe Pr. | toe Mom | heel Mom | heel As c bars | toe Pr. | toe Mom | heel Mom. | heel As c bars | Conc cf/ft | 0 | 5 | 7.5 | 10 | 12.5 | 15 | 17.5 | 20 | H |
| 10 | 4.56 | -5.80 | -4.99 | 0.22 #6@18 | 4.97 | -6.45 | -6.61 | 0.31 #7@18 | 5.39 | -7.09 | -8.17 | 0.38 #7@18 | 5.81 | -7.73 | -9.74 | 0.45 #8@18 | 24.5 | 57 | 55 | 57 | 58 | 59 | 61 | 61 | 63 | 10 |
| 12 | 4.57 | -9.41 | -3.74 | 0.15 #5@18 | 4.93 | -10.31 | -5.55 | 0.26 #6@18 | 5.28 | -11.21 | -7.32 | 0.34 #7@18 | 5.64 | -12.12 | -9.13 | 0.42 #8@18 | 29.1 | 74 | 69 | 68 | 70 | 71 | 72 | 74 | 76 | 12 |
| 14 | 4.62 | -14.23 | -1.98 | 0.09 #4@18 | 4.94 | -15.44 | -4.05 | 0.19 #5@18 | 5.25 | -16.60 | -6.01 | 0.28 #6@18 | 5.56 | -17.78 | -8.01 | 0.37 #7@18 | 33.8 | 102 | 99 | 96 | 93 | 94 | 95 | 96 | 98 | 14 |
| 16 | 4.72 | -20.00 | +4.92 | 0.22 #5@15 | 5.00 | -21.47 | +2.68 | 0.12 #4@15 | 5.27 | -22.90 | -3.98 | 0.17 #5@15 | 5.55 | -24.40 | -6.25 | 0.29 #6@15 | 38.9 | 129 | 124 | 119 | 115 | 112 | 109 | 113 | 115 | 16 |
| 18 | 4.84 | -27.06 | +9.52 | 0.41 #6@11½ | 5.09 | -28.84 | +7.10 | 0.31 #5@11½ | 5.34 | -30.24 | +4.63 | 0.20 #4@11½ | 5.59 | -32.37 | -3.80 | 0.18 #4@11½ | 43.8 | 172 | 164 | 158 | 158 | 152 | 147 | 143 | 145 | 18 |
| 20 | 5.13 | -36.78 | +16.25 | 0.59 #6@9 | 5.36 | -38.89 | +13.06 | 0.48 #6@9 | 5.59 | -40.98 | +10.92 | 0.40 #5@9 | 5.81 | -42.97 | +8.29 | 0.30 #5@9 | 51.7 | 231 | 220 | 211 | 211 | 203 | 203 | 196 | 196 | 20 |
| 22 | 5.31 | -47.11 | +22.87 | 0.83 #9@14 | 5.52 | -49.53 | +20.49 | 0.75 #9@14 | 5.72 | -51.89 | +17.62 | 0.64 #8@14 | 5.94 | -54.27 | +14.69 | 0.54 #8@14 | 57.4 | 307 | 291 | 291 | 281 | 271 | 271 | 264 | 264 | 22 |
| 24 | 5.64 | -60.67 | +33.31 | 1.05 #10@11½ | 5.83 | -63.21 | +30.19 | 0.95 #9@11½ | 6.02 | -65.94 | +27.21 | 0.86 #9@11½ | 6.21 | -68.65 | +24.13 | 0.76 #8@11½ | 66.5 | 366 | 366 | 353 | 353 | 353 | 341 | 341 | 331 | 24 |
| 26 | 5.80 | -75.32 | +40.3 | 1.35 #11@14 | 5.98 | -78.30 | +36.9 | 1.23 #11@14 | 6.16 | -81.29 | +33.6 | 1.17 #11@14 | 6.34 | -84.23 | +31.4 | 1.05 #10@14 | 77.8 | 400 | 400 | 400 | 400 | 382 | 382 | 382 | 371 | 26 |
| 28 | 6.14 | -93.30 | +53.1 | 1.55 #9@7 | 6.32 | -96.66 | +50.2 | 1.47 #9@7 | 6.48 | -99.85 | +46.8 | 1.37 #11@14 | 6.64 | -103.14 | +43.9 | 1.28 #11@14 | 90.8 | 492 | 470 | 470 | 470 | 470 | 470 | 451 | 451 | 28 |
| 30 | 6.33 | -112.04 | +56.0 | 1.63 #9@7 | 6.49 | -115.69 | +52.8 | 1.54 #9@7 | 6.65 | -119.29 | +49.9 | 1.43 #9@7 | 6.80 | -122.80 | +46.9 | 1.36 #9@7 | 103.6 | 543 | 543 | 543 | 543 | 518 | 518 | 518 | 518 | 30 |
| 32 | 6.67 | -135.31 | +68.3 | 1.76 #10@7 | 6.82 | -139.31 | +65.4 | 1.69 #9@7 | 6.97 | -143.23 | +62.2 | 1.60 #9@7 | 7.11 | -147.00 | +59.3 | 1.52 #9@7 | 117.3 | 620 | 620 | 620 | 620 | 620 | 594 | 594 | 594 | 32 |
| 34 | 6.89 | -160.12 | +80.4 | 2.08 #10@7 | 7.03 | -163.83 | +77.1 | 2.00 #10.7 | 7.16 | -168.32 | +74.0 | 1.91 #10@7 | 7.30 | -172.53 | +70.8 | 1.83 #10@7 | 126.7 | 776 | 776 | 776 | 745 | 745 | 745 | 745 | 745 | 34 |
| 36 | 7.22 | -189.28 | +99.1 | 2.30 #10@6½ | 7.35 | -193.78 | +96.2 | 2.24 #10@6½ | 7.48 | -198.21 | +88.6 | 2.18 #10@6½ | 7.61 | -202.63 | +85.1 | 2.00 #10@6½ | 141.4 | 854 | 854 | 854 | 820 | 820 | 820 | 820 | 820 | 36 |

NOTE: For walls with seats less than 7'-0", the concrete quantity shall be increased by 2% per foot of variation.

NOTE TO DESIGNERS: The footing 'F' dimension should be checked for compliance with current Bridge Design Specifications. The dimension and concrete quantity should be adjusted accordingly. A future revision will correct the non-complying portions of this table.

# CANTILEVER ABUTMENT — PILE FOOTING

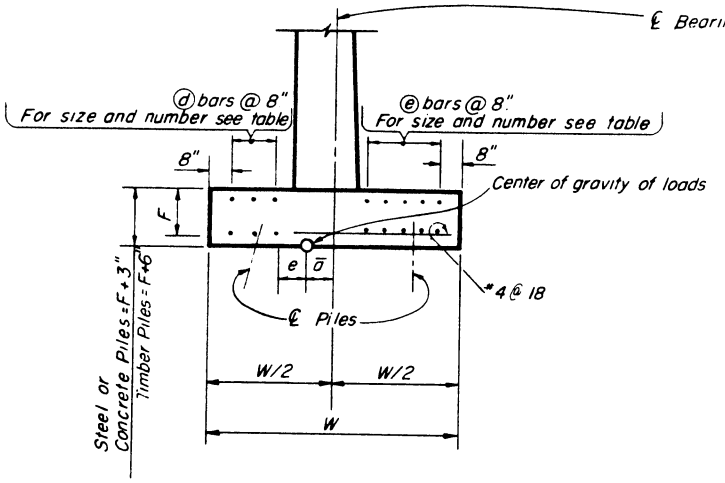


TYPE I
H10 thru H14

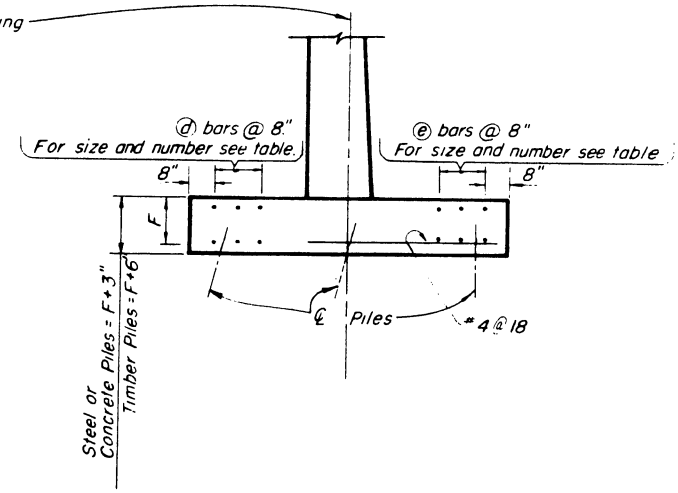


TYPE II
H16 thru H20

NOTE:
Reinforcement detailed is in addition to that detailed for spread footing.

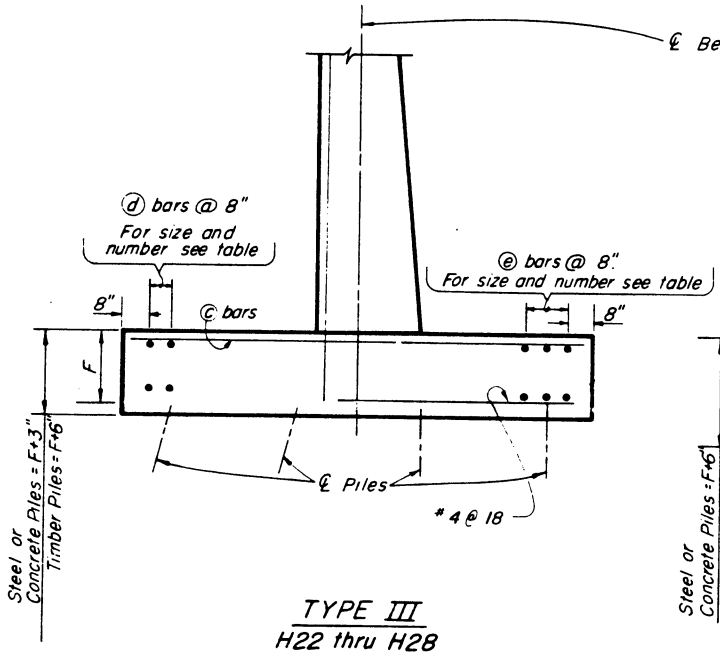


TYPE III
H22 thru H28

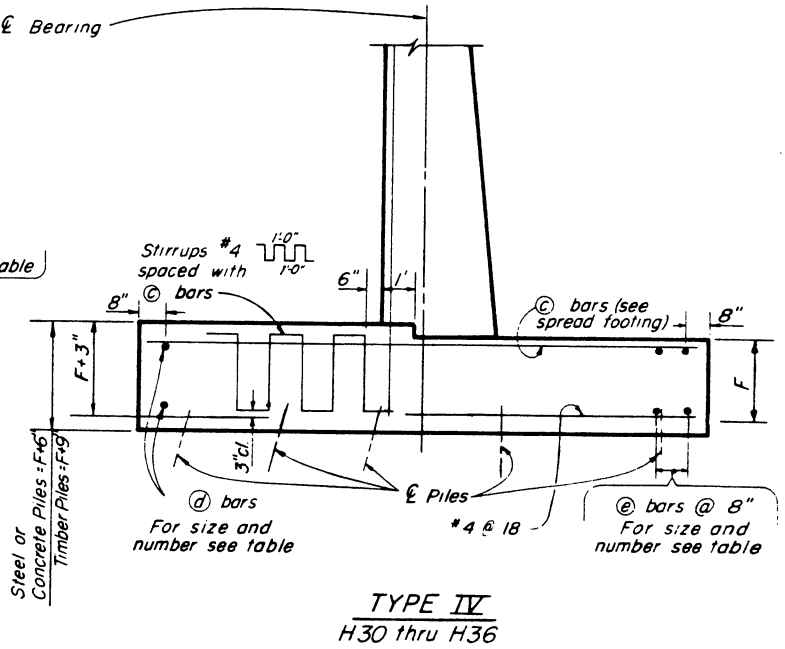


TYPE IV
H30 thru H36

## LEGEND

N = number of piles per line

S = pile spacing in feet between lines.

$\bar{a}$ = distance from ℄ bearing to center of gravity of pile pattern

e = eccentricity from center gravity of pile pattern

I = moment of inertia of one line of piles

$I/C_t$ = section modulus one pile line, toe pile

$I/C_h$ = section modulus one pile line, heel pile

$$S = \frac{L}{\Sigma V/\left\{\frac{1}{N} \pm \frac{e}{I/C}\right\}}$$

$$A = \left\{\frac{1}{N} + \frac{e}{I/C_t}\right\}$$ toe pile, 36 lbs fl pressure

$$B = \left\{\frac{1}{N} - \frac{e}{I/C_h}\right\}$$ heel pile, 27 lbs fl pressure

T = horizontal thrust in kips per line of piles

L = Allowable pile loading.

For 45 ton piles: L = 85.5 kips battered toe pile.
90.0 kips plumb heel pile.

All values on this sheet are based on 45 ton piles.

Lateral resistance of each vertical pile in bending is limited to 15% of the axial load. Balance of lateral forces taken by the battered piles

In cases of special foundation situations, values should be subject to review.

# CANTILEVER ABUTMENT - PILE FOOTING

## PILE LOADINGS FOR ABUTMENT PILE FOOTINGS

| H | W | TYPE | PILE PATTERN LAYOUT (SINGLE SPACING / DOUBLE SPACING) | PILE PATTERN PROPERTIES N | 1/N | - a | I | $I/c_t$ | $I/c_h$ | QUANTITIES d Bars | e Bars | conc. cf/ft | BAR REINFORCING STEEL (LBS/FT) APPLIED SUPERSTRUCTURE LOAD 0 | 5 | 7.5 | 10 | 12.5 | 15 | 17.5 | 20 | H |
|---|---|---|---|---|---|---|---|---|---|---|---|---|---|---|---|---|---|---|---|---|---|
| 10 | 6 | I | TOE 1'-6" 1'-6" HEEL | 1.5 | 0.667 | 0.50 | 3.00 | 3.00 | 1.56 | 6-#10 | 10-#11 | 26.0 | 139 | 137 | 136 | 137 | 138 | 140 | 140 | 142 | 10 |
| 12 | 7 | I | 2'-0" 2'-0" | 1.5 | 0.667 | 0.67 | 5.33 | 4.00 | 2.00 | 6-#9 | 10-#11 | 30.8 | 140 | 135 | 134 | 133 | 134 | 135 | 137 | 139 | 12 |
| 14 | 8 | I | 2'-6" 2'-6" | 1.5 | 0.667 | 0.83 | 8.34 | 5.00 | 2.51 | 6-#8 | 6-#11 | 35.8 | 154 | 151 | 148 | 145 | 142 | 143 | 144 | 146 | 14 |
| 16 | 9 | II | 3'-0" 3'-0" | 2.0 | 0.500 | 0.75 | 12.37 | 5.50 | 3.30 | 6-#8 | 6-#11 | 41.1 | 181 | 176 | 171 | 167 | 164 | 161 | 161 | 163 | 16 |
| 18 | 10 | II | 3'-6" 3'-6" | 2.0 | 0.500 | 0.87 | 16.85 | 6.41 | 3.86 | 4-#9 | 6-#10 | 46.3 | 216 | 208 | 202 | 202 | 196 | 191 | 187 | 185 | 18 |
| 20 | 11 | II | 4'-0" 4'-0" | 2.0 | 0.500 | 1.00 | 22.00 | 7.33 | 4.40 | 2-#10 | 4-#10 | 54.5 | 262 | 251 | 242 | 242 | 234 | 234 | 227 | 227 | 20 |
| 22 | 12 | III | 3'-0" 1'-6" 1'-6" 3'-0" | 3.0 | 0.333 | 1.00 | 30.7 | 8.76 | 5.58 | 4-#8 | 6-#10 | 60.4 | 349 | 333 | 333 | 323 | 313 | 313 | 306 | 306 | 22 |
| 24 | 13 | III | 3'-4" 1'-8" 1'-8" 3'-4" | 3.0 | 0.333 | 1.11 | 38.0 | 9.78 | 6.22 | 2-#10 | 6-#8 | 69.7 | 397 | 397 | 384 | 384 | 384 | 372 | 372 | 362 | 24 |
| 26 | 14 | III | 3'-8" 1'-10" 1'-10" 3'-8" | 3.0 | 0.333 | 1.22 | 45.9 | 10.72 | 6.82 | 2-#9 | 4-#9 | 77.8 | 400 | 400 | 400 | 400 | 382 | 382 | 382 | 371 | 26 |
| 28 | 15 | III | 4'-0" 2'-0" 2'-0" 4'-0" | 3.0 | 0.333 | 1.33 | 54.6 | 11.70 | 7.45 | 2-#8 | 4-#8 | 90.8 | 492 | 470 | 470 | 470 | 470 | 470 | 451 | 451 | 28 |
| 30 | 16 | IV | 3'-0" 3'-0" 3'-0" 3'-0" 3'-0" 3'-6" | 3.5 | 0.286 | 1.57 | 71.6 | 14.52 | 8.88 | 2-#8 | 4-#8 | 103.6 | 543 | 543 | 543 | 543 | 518 | 518 | 518 | 518 | 30 |
| 32 | 17 | IV | 3'-0" 3'-0" 1'-0" 3'-0" 4'-0" | 3.5 | 0.286 | 1.86 | 82.4 | 16.02 | 9.30 | 2-#8 | 2-#10 | 117.3 | 620 | 620 | 620 | 620 | 620 | 594 | 594 | 594 | 32 |
| 34 | 18 | IV | 3'-0" 3'-0" 1'-6" 2'-6" 5'-0" | 3.5 | 0.286 | 2.21 | 91.6 | 17.30 | 9.44 | 2-#8 | 2-#10 | 126.7 | 776 | 776 | 776 | 745 | 745 | 745 | 745 | 745 | 34 |
| 36 | 19 | IV | 3'-0" 3'-0" 2'-0" 2'-0" 6'-0" | 3.5 | 0.286 | 2.57 | 101.6 | 18.70 | 9.62 | 2-#7 | 2-#10 | 141.4 | 854 | 854 | 854 | 820 | 820 | 820 | 820 | 820 | 36 |

℄ BEARING

## APPLIED SUPERSTRUCTURE LOAD (K/FT.)

| H | 0 ΣV | e 36# | e 27# | A | B | S | T | 5 ΣV | e 36# | e 27# | A | B | S | T | 7.5 ΣV | e 36# | e 27# | A | B | S | T | 10 ΣV | e 36# | e 27# | A | B | S | T | H |
|---|---|---|---|---|---|---|---|---|---|---|---|---|---|---|---|---|---|---|---|---|---|---|---|---|---|---|---|---|---|
| 10 | 5.64 | 1.17 | .56 | 1.058 | | 12.0 | 46.0 | 10.64 | .38 | .06 | .794 | | 10.1 | 32.4 | 13.14 | .22 | -.04 | .740 | | 8.80 | 28.2 | 15.64 | .10 | -.12 | | .744 | 7.74 | 24.8 | 10 |
| 12 | 7.98 | 1.05 | .37 | .930 | | 11.5 | 49.1 | 12.98 | .39 | -.03 | .765 | | 8.61 | 36.6 | 15.48 | .21 | -.13 | .719 | | 7.68 | 32.6 | 17.98 | .09 | -.21 | | .772 | 6.48 | 27.5 | 12 |
| 14 | 10.55 | .97 | .23 | .861 | | 9.41 | 51.2 | 15.55 | .39 | -.11 | .745 | | 7.38 | 40.2 | 18.05 | .22 | -.21 | | .751 | 6.65 | 36.2 | 20.55 | .09 | -.28 | | .779 | 5.62 | 30.6 | 14 |
| 16 | 13.39 | 1.14 | .34 | .709 | | 9.02 | 61.2 | 18.39 | .63 | .04 | .616 | | 7.55 | 51.1 | 20.89 | .46 | -.05 | .584 | | 6.99 | 47.3 | 23.39 | .34 | -.13 | .562 | | 6.50 | 44.0 | 16 |
| 18 | 16.45 | 1.13 | .25 | .676 | | 7.68 | 63.3 | 21.45 | .66 | -0.01 | .603 | | 6.60 | 54.4 | 23.95 | 0.50 | -.10 | .578 | | 6.17 | 51.0 | 26.45 | .37 | -.17 | .558 | | 5.79 | 47.7 | 18 |
| 20 | 20.17 | 1.20 | .23 | .664 | | 6.40 | 64.4 | 25.17 | .76 | -.01 | .604 | | 5.63 | 56.9 | 27.67 | .61 | -.10 | .583 | | 5.30 | 53.5 | 30.17 | .47 | -.18 | .564 | | 5.03 | 50.8 | 20 |
| 22 | 23.78 | 1.35 | .28 | .487 | | 7.39 | 88.1 | 28.78 | .94 | .05 | .440 | | 6.75 | 80.4 | 31.28 | .78 | -.03 | .422 | | 6.47 | 77.0 | 33.78 | .65 | -.10 | .407 | | 6.21 | 73.8 | 22 |
| 24 | 28.11 | 1.44 | .27 | .480 | | 6.34 | 89.0 | 33.11 | 1.05 | .07 | .440 | | 5.86 | 82.3 | 35.61 | .91 | -.02 | .426 | | 5.63 | 79.0 | 38.11 | .77 | -.09 | .412 | | 5.45 | 76.4 | 24 |
| 26 | 32.29 | 1.45 | .21 | .468 | | 5.66 | 91.8 | 37.29 | 1.09 | .02 | .435 | | 5.26 | 85.2 | 39.79 | .94 | -.06 | .421 | | 5.10 | 82.6 | 42.29 | .82 | -.13 | .409 | | 4.95 | 80.2 | 26 |
| 28 | 37.30 | 1.55 | .21 | .466 | | 4.91 | 91.8 | 42.30 | 1.21 | .03 | .436 | | 4.63 | 88.5 | 44.80 | 1.07 | -.05 | .425 | | 4.50 | 84.1 | 47.30 | .94 | -.12 | .413 | | 4.38 | 81.9 | 28 |
| 30 | 42.08 | 1.42 | .01 | .384 | | 5.29 | 111.5 | 47.08 | 1.11 | -.16 | .362 | | 5.01 | 105.0 | 49.58 | .97 | -.23 | .353 | | 4.88 | 102.0 | 52.08 | .85 | -.29 | .345 | | 4.76 | 100.0 | 30 |
| 32 | 47.85 | 1.33 | -.18 | .369 | | 4.83 | 115.7 | 52.85 | 1.03 | -.35 | .350 | | 4.62 | 110.5 | 55.35 | .90 | -.41 | .342 | | 4.52 | 108.0 | 57.85 | .78 | -.47 | .335 | | 4.41 | 105.0 | 32 |
| 34 | 53.25 | 1.11 | -.49 | .350 | | 4.58 | 122.1 | 58.25 | .82 | -.64 | .333 | | 4.41 | 117.5 | 60.75 | . | -.71 | | .361 | 4.10 | 109.0 | 63.25 | .58 | -.76 | | .367 | 3.87 | 103.0 | 34 |
| 36 | 59.65 | .93 | -.72 | .336 | | 4.26 | 127.0 | 64.65 | .66 | -.89 | | .379 | 3.68 | 110.0 | 67.15 | | -.95 | | .385 | 3.48 | 104.0 | 69.65 | .43 | -1.01 | | .391 | 3.30 | 98.4 | 36 |

## APPLIED SUPERSTRUCTURE LOAD (K/FT.)

| H | 12.5 ΣV | e 36# | e 27# | A | B | S | T | 15 ΣV | e 36# | e 27# | A | B | S | T | 17.5 ΣV | e 36# | e 27# | A | B | S | T | 20 ΣV | e 36# | e 27# | A | B | S | T | H |
|---|---|---|---|---|---|---|---|---|---|---|---|---|---|---|---|---|---|---|---|---|---|---|---|---|---|---|---|---|---|
| 10 | 18.14 | .02 | -.17 | | .776 | 6.39 | 20.5 | 20.64 | -.05 | -.21 | | .802 | 5.44 | 17.5 | 23.14 | -.09 | -.24 | | .821 | 4.74 | 15.2 | 25.64 | -.13 | -.27 | | .840 | 4.18 | 13.4 | 10 |
| 12 | 20.48 | 0.00 | -.27 | | .802 | 5.48 | 23.3 | 22.98 | -.07 | -.31 | | .822 | 4.76 | 20.2 | 25.48 | -.13 | -.34 | | .837 | 4.21 | 17.9 | 27.98 | -.18 | -.37 | | .852 | 3.78 | 16.1 | 12 |
| 14 | 23.05 | -.01 | -.34 | | .804 | 4.85 | 26.5 | 25.55 | -.09 | -.39 | | .822 | 4.29 | 23.4 | 28.05 | -.15 | -.43 | | .838 | 3.82 | 20.8 | 30.55 | -.21 | -.46 | | .850 | 3.47 | 18.9 | 14 |
| 16 | 25.89 | .23 | -.19 | | .588 | 6.09 | 41.2 | 28.39 | .14 | -.24 | | .573 | 5.54 | 37.5 | 30.89 | .07 | -.28 | | .585 | 4.98 | 33.7 | 33.39 | -.01 | -.31 | | .594 | 4.53 | 30.7 | 16 |
| 18 | 28.95 | .27 | -.23 | | .560 | 5.44 | 44.8 | 31.45 | .18 | -.28 | | .573 | 4.99 | 41.1 | 33.95 | .07 | -.32 | | .583 | 4.55 | 37.5 | 36.45 | -0.00 | -.36 | | .593 | 4.16 | 34.9 | 18 |
| 20 | 32.67 | .36 | -.24 | | .555 | 4.76 | 48.3 | 35.17 | .26 | -.29 | | .566 | 4.52 | 45.6 | 37.67 | .18 | -.34 | | .577 | 4.14 | 41.8 | 40.17 | .08 | -.38 | | .586 | 3.82 | 38.6 | 20 |
| 22 | 36.28 | .54 | -.17 | .395 | | 5.96 | 71.0 | 38.78 | .44 | -.22 | .383 | | 5.76 | 68.6 | 41.28 | .35 | -.27 | | .381 | 5.55 | 66.1 | 43.78 | .28 | -.31 | | .389 | 5.28 | 62.9 | 22 |
| 24 | 40.61 | .66 | -.15 | .400 | | 5.26 | 73.6 | 43.11 | .55 | -.20 | .389 | | 5.09 | 71.2 | 45.61 | .46 | -.26 | .380 | | 4.94 | 69.1 | 48.11 | .38 | -.30 | | .381 | 4.77 | 66.8 | 24 |
| 26 | 44.79 | .70 | -.19 | .398 | | 4.79 | 77.6 | 47.29 | .60 | -.26 | .388 | | 4.65 | 75.3 | 49.79 | .51 | -.29 | .381 | | 4.51 | 73.0 | 52.29 | .43 | -.34 | | .383 | 4.37 | 70.8 | 26 |
| 28 | 49.80 | .83 | -.18 | .404 | | 4.26 | 79.5 | 52.30 | .73 | -.23 | .395 | | 4.14 | 77.4 | 54.80 | .63 | -.28 | .387 | | 4.04 | 75.5 | 57.30 | .54 | -.33 | 3.79 | | 3.94 | 73.6 | 28 |
| 30 | 54.58 | .74 | -.35 | .337 | | 4.64 | 97.4 | 57.08 | .63 | -.40 | | .331 | 4.53 | 95.2 | 59.58 | .54 | -.45 | | .337 | 4.42 | 93.0 | 62.08 | .46 | -.51 | | .343 | 4.23 | 88.9 | 30 |
| 32 | 60.35 | .67 | -.53 | | .343 | 4.33 | 103.0 | 62.85 | .57 | -.58 | | .348 | 4.10 | 98.0 | 65.35 | .48 | -.63 | | .354 | 3.89 | 93.1 | 67.85 | .39 | -.67 | | .356 | 3.71 | 88.8 | 32 |
| 34 | 65.75 | .47 | -.82 | | .373 | 3.68 | 98.2 | 68.25 | .37 | -.87 | | .378 | 3.49 | 92.7 | 70.75 | .29 | -.92 | | .383 | 3.32 | 88.3 | 73.25 | .20 | -.96 | | .388 | 3.17 | 84.3 | 34 |
| 36 | 72.15 | .33 | -1.06 | | .397 | 3.15 | 93.9 | 74.65 | .23 | -1.11 | | .402 | 2.99 | 89.1 | 77.15 | .11 | -1.16 | | .407 | 2.87 | 85.4 | 79.65 | .06 | -1.21 | | .412 | 2.75 | 81.9 | 36 |

NOTES: The values of "S" given are maximum allowable. Where only values of "A" are listed the toe pile governs. When "B" values only are listed the heel pile governs.
For other pile loadings obtain the required spacing by proportion, for example: allowable pile loading - 60 tons, multiply values of "S" in the table by 60/45.

BAR REINFORCING QUANTITIES ARE TOTAL QUANTITIES INCLUDING STEEL IN ABUTMENT AND FOOTING.

| FED. ROAD DIST. No. | STATE | ROUTE | FISCAL YEAR | SHEET No. | TOTAL SHEETS |
|---|---|---|---|---|---|
| 7 | CALIF | | | | |

| DIST. | COUNTY | ROUTE | SECTION | SHEET No. | TOTAL SHEETS |
|---|---|---|---|---|---|
| | | | | | |

| H | FOOTING DATA W | C | B | PILE PATTERN LAYOUT (P ← Layout Line → Q) | Pile Pattern Type | Surcharge | CONCRETE PILES Values of ΣV, ΣH and H' are kips/ft. F+3 | ΣV | ΣH | Pso | Qso | H'so | Pss | Qss | H'ss | STEEL PILES Values of ΣV, ΣH and H' are kips/ft. F+6 | ΣV | ΣH | Pso | Qso | H'so |
|---|---|---|---|---|---|---|---|---|---|---|---|---|---|---|---|---|---|---|---|---|---|
| 4 | 4'-2" | 1'-4" | 2'-10" | 1'-3" | I | 2' level | 1'-5" | 2.52 | 0.92 | 12'-0" | 18'-0" | 4.04 | 12'-0" | 18'-0" | 3.47 | 1'-8" | 2.63 | 0.99 | 12'-0" | 18'-0" | 3.47 |
| | | | | | | 2:1 | | 2.49 | 0.74 | 12'-0" | 18'-0" | 4.04 | 12'-0" | 18'-0" | 3.47 | | 2.52 | 0.80 | 12'-0" | 18'-0" | 3.47 |
| | | | | | | 1½:1 | | 3.00 | 1.11 | 12'-0" | 18'-0" | 4.04 | 12'-0" | 18'-0" | 3.47 | | 3.06 | 1.20 | 12'-0" | 18'-0" | 3.47 |
| 6 | 4'-2" | 1'-4" | 2'-10" | 1'-3" | I | 2' level | 1'-5" | 4.05 | 1.53 | 12'-0" | 18'-0" | 4.04 | 12'-0" | 18'-0" | 3.47 | 1'-8" | 4.20 | 1.61 | 12'-0" | 18'-0" | 3.47 |
| | | | | | | 2:1 | | 4.12 | 1.45 | 12'-0" | 18'-0" | 4.04 | 12'-0" | 18'-0" | 3.47 | | 4.19 | 1.55 | 12'-0" | 18'-0" | 3.47 |
| | | | | | | 1½:1 | | 5.10 | 2.25 | 12'-0" | 18'-0" | 4.04 | 12'-0" | 18'-0" | 3.47 | | 5.20 | 2.36 | 12'-0" | 18'-0" | 3.47 |
| 8 | 5'-2" | 1'-8" | 3'-6" | 4" 1'-8" | I | 2' level | 1'-5" | 5.89 | 2.27 | 12'-0" | 18'-0" | 4.04 | 10'-8" | 18'-0" | 3.82 | 1'-8" | 6.08 | 2.38 | 12'-0" | 18'-0" | 3.82 |
| | | | | | | 2:1 | | 6.16 | 2.39 | 12'-0" | 18'-0" | 4.04 | 11'-6" | 18'-0" | 3.60 | | 6.25 | 2.50 | 12'-0" | 18'-0" | 3.60 |
| | | | | | | 1½:1 | | 6.89 | 3.06 | 12'-0" | 18'-0" | 4.04 | 9'-7" | 18'-0" | 4.16 | | 7.01 | 3.29 | 12'-0" | 18'-0" | 4.16 |
| 10 | 5'-2" | 2'-0" | 4'-2" | 6" 2'-6" | I | 2' level | 1'-5" | 8.07 | 3.18 | 12'-0" | 18'-0" | 4.04 | 8'-11" | 18'-0" | 4.70 | 1'-8" | 8.30 | 3.29 | 12'-0" | 18'-0" | 4.70 |
| | | | | | | 2:1 | | 8.62 | 3.55 | 12'-0" | 18'-0" | 4.04 | 9'-0" | 16'-7" | 4.45 | | 8.76 | 3.69 | 12'-0" | 18'-0" | 4.45 |
| | | | | | | 1½:1 | | 9.49 | 4.31 | 11'-1" | 18'-0" | 4.49 | 8'-3" | 18'-0" | 4.72 | | 9.66 | 4.47 | 11'-3" | 18'-0" | 4.72 |
| 12 | 7'-2" | 2'-4" | 4'-10" | 10" 3'-3" | I | 2' level | 1'-5" | 10.57 | 4.21 | 10'-2" | 18'-0" | 5.10 | 7'-2" | 14'-4" | 6.01 | 1'-8" | 10.84 | 4.35 | 9'-9" | 18'-0" | 6.01 |
| | | | | | | 2:1 | | 11.51 | 4.96 | 9'-8" | 16'-5" | 5.09 | 6'-10" | 12'-0" | 5.94 | | 11.67 | 5.10 | 9'-5" | 15'-10" | 5.94 |
| | | | | | | 1½:1 | | 12.02 | 5.35 | 8'-11" | 16'-0" | 5.38 | 6'-3" | 13'-2" | 6.25 | | 12.23 | 5.54 | 8'-7" | 16'-0" | 6.25 |
| 14 | 8'-0" | 2'-8" | 5'-4" | 1'-2" 3'-8" | I | 2' level | 1'-6" | 13.03 | 5.40 | 8'-5" | 16'-0" | 6.22 | 5'-11" | 11'-10" | 7.36 | 1'-8" | 13.33 | 5.55 | 8'-0" | 16'-0" | 7.36 |
| | | | | | | 2:1 | | 14.40 | 6.49 | 7'-5" | 13'-0" | 6.58 | 5'-5" | 9'-3" | 7.50 | | 14.65 | 6.70 | 7'-2" | 13'-5" | 7.50 |
| | | | | | | 1½:1 | | 14.86 | 6.86 | 7'-0" | 14'-0" | 6.80 | 5'-1" | 10'-7" | 7.33 | | 15.10 | 7.05 | 6'-10" | 15'-3" | 7.33 |
| 16 | 9'-0" | 3'-0" | 6'-0" | 1'-6" 4'-6" | I | 2' level | 1'-6" | 16.13 | 6.74 | 6'-11" | 13'-10" | 7.61 | 4'-10" | 9'-8" | 9.08 | 1'-8" | 16.48 | 6.89 | 7'-0" | 14'-0" | 9.08 |
| | | | | | | 2:1 | | 18.25 | 8.34 | 5'-9" | 9'-10" | 8.55 | 4'-4" | 7'-0" | 9.48 | | 18.37 | 8.54 | 5'-7" | 10'-3" | 9.48 |
| | | | | | | 1½:1 | | 18.59 | 8.00 | 6'-0" | 9'-6" | 8.28 | 4'-3" | 6'-9" | 9.70 | | 18.70 | 8.16 | 5'-11" | 9'-11" | 9.70 |
| 18 | 10'-0" | 3'-4" | 6'-8" | 1'-10" 1'-3" 3'-7" | II | 2' level | 1'-7" | 19.57 | 8.21 | 6'-11" | 13'-10" | 9.71 | 4'-10" | 9'-8" | 11.46 | 1'-8" | 19.94 | 8.39 | 6'-6" | 13'-6" | 11.46 |
| | | | | | | 2:1 | | 22.16 | 10.42 | 5'-11" | 9'-9" | 10.68 | 4'-4" | 6'-11" | 12.04 | | 22.54 | 10.65 | 5'-10" | 10'-5" | 12.04 |
| | | | | | | 1½:1 | | 22.51 | 9.95 | 6'-2" | 9'-4" | 10.34 | 4'-3" | 6'-8" | 12.29 | | 22.90 | 10.18 | 5'-11" | 9'-11" | 12.29 |
| 20 | 11'-0" | 3'-8" | 7'-4" | 2'-1" 1'1" 4'-10" | II | 2' level | 1'-7" | 23.63 | 9.95 | 5'-8" | 11'-4" | 11.81 | 4'-0" | 8'-0" | 13.90 | 1'-10" | 24.04 | 10.18 | 5'-6" | 11'-0" | 13.90 |
| | | | | | | 2:1 | | 27.00 | 12.87 | 4'-10" | 9'-1" | 12.88 | 3'-5" | 6'-5" | 14.85 | | 27.47 | 13.13 | 4'-10" | 9'-0" | 14.85 |
| | | | | | | 1½:1 | | 27.39 | 12.31 | 4'-11" | 8'-9" | 12.68 | 3'-5" | 6'-3" | 14.95 | | 27.87 | 12.55 | 4'-10" | 8'-8" | 14.95 |
| 22 | 12'-0" | 4'-0" | 8'-0" | 2'-2" 1'-0" 4'-11" | III | 2' level | 1'-9" | 28.02 | 11.81 | 5'-1" | 10'-2" | 14.40 | 3'-7" | 7'-2" | 16.86 | 2'-0" | 28.47 | 12.10 | 5'-0" | 10'-0" | 16.86 |
| | | | | | | 2:1 | | 32.26 | 15.60 | 4'-3" | 9'-9" | 15.72 | 3'-0" | 6'-11" | 18.40 | | 32.84 | 15.90 | 4'-2" | 9'-9" | 18.40 |
| | | | | | | 1½:1 | | 32.70 | 14.95 | 4'-3" | 9'-5" | 16.00 | 3'-0" | 6'-8" | 18.44 | | 33.28 | 15.21 | 4'-2" | 9'-2" | 18.44 |
| 24 | 13'-3" | 4'-5" | 8'-10" | 2'-11" 1' 7'-0" | IV | 2' level | 1'-11" | 33.50 | 13.93 | 5'-0" | 10'-0" | 15.85 | 3'-6" | 7'-0" | 19.00 | 2'-2" | 34.00 | 14.16 | 4'-11" | 9'-10" | 19.00 |
| | | | | | | 2:1 | | 36.96 | 18.71 | 4'-9" | 8'-8" | 19.00 | 3'-6" | 6'-2" | 20.10 | | 37.67 | 19.00 | 4'-8" | 8'-5" | 20.10 |
| | | | | | | 1½:1 | | 37.45 | 17.95 | 5'-0" | 8'-4" | 18.15 | 3'-6" | 5'-11" | 21.10 | | 38.16 | 18.25 | 4'-11" | 8'-2" | 21.10 |
| 26 | 14'-3" | 4'-9" | 9'-6" | 3'-3" 3'-9" 4'-1" | V | 2' level | 2'-2" | 38.94 | 16.31 | 5'-4" | 10'-8" | 19.60 | 3'-9" | 7'-6" | 23.30 | 2'-5" | 39.47 | 16.60 | 5'-2" | 10'-4" | 23.30 |
| | | | | | | 2:1 | | 45.38 | 22.09 | 4'-4" | 8'-8" | 22.15 | 3'-0" | 6'-1" | 26.30 | | 46.19 | 22.41 | 4'-3" | 8'-5" | 26.30 |
| | | | | | | 1½:1 | | 45.89 | 21.20 | 4'-4" | 8'-1" | 22.35 | 3'-0" | 6'-0" | 26.30 | | 46.72 | 21.50 | 4'-3" | 8'-3" | 26.30 |
| 28 | 15'-3" | 5'-1" | 10'-2" | 3'-0" 1' 2'-5" 3'-0" 3'-1" | VI | 2' level | 2'-5" | 44.90 | 18.86 | 5'-4" | 10'-8" | 27.20 | 3'-9" | 7'-6" | 31.80 | 2'-8" | 45.47 | 19.14 | 5'-3" | 10'-6" | 31.80 |
| | | | | | | 2:1 | | 52.60 | 25.79 | 4'-4" | 11'-4" | 31.10 | 3'-0" | 8'-1" | 36.20 | | 53.53 | 26.10 | 4'-2" | 11'-6" | 36.20 |
| | | | | | | 1½:1 | | 53.04 | 24.66 | 4'-4" | 10'-8" | 31.20 | 3'-0" | 7'-8" | 36.40 | | 54.09 | 25.04 | 4'-3" | 10'-6" | 36.40 |
| 30 | 16'-9" | 5'-5" | 11'-4" | 3'-0" 1' 2'-1" 3'-3" 4'-3" | VII | 2' level | 2'-7" | 51.01 | 21.57 | 5'-0" | 10'-0" | 26.80 | 3'-5" | 6'-10" | 31.60 | 2'-10" | 51.62 | 21.70 | 4'-11" | 9'-10" | 31.60 |
| | | | | | | 2:1 | | 59.99 | 29.53 | 3'-10" | 12'-0" | 34.70 | 3'-0" | 10'-0" | 35.95 | | 61.04 | 29.78 | 3'-10" | 12'-0" | 35.95 |
| | | | | | | 1½:1 | | 60.58 | 28.35 | 3'-10" | 12'-0" | 34.70 | 3'-0" | 8'-7" | 36.00 | | 61.69 | 28.75 | 3'-10" | 11'-8" | 36.00 |
| 32 | 18'-3" | 5'-10" | 12'-5" | 3'-0" 1'-4" 1'-8" 4'-8" 4'-7" | VII | 2' level | 3'-1" | 59.00 | 24.70 | 4'-7" | 9'-2" | 30.00 | | | | 3'-4" | 59.70 | 25.00 | 4'-7" | 9'-2" | |
| | | | | | | 2:1 | | 69.60 | 34.30 | 3'-10" | 13'-3" | 34.50 | | | | | 70.40 | 34.70 | 3'-9" | 13'-2" | |
| | | | | | | 1½:1 | | 60.90 | 26.60 | 4'-0" | 14'-0" | 33.00 | | | | | 61.60 | 27.00 | 3'-11" | 13'-10" | |
| 34 | 19'-3" | 6'-3" | 13'-0" | 3'-0" 1'-9" 1'-3" 5'-2" 5'-1" | VII | 2' level | 3'-6" | 67.00 | 27.80 | 4'-2" | 8'-4" | 33.00 | | | | 3'-9" | 67.70 | 28.10 | 4'-1" | 8'-2" | |
| | | | | | | 2:1 | | 79.20 | 38.90 | 3'-4" | 11'-8" | 39.40 | | | | | 80.00 | 39.40 | 3'-3" | 11'-4" | |
| | | | | | | 1½:1 | | 69.40 | 29.50 | 3'-8" | 12'-10" | 35.80 | | | | | 70.10 | 30.70 | 3'-7" | 12'-6" | |
| 36 | 20'-3" | 6'-7" | 13'-8" | 3'-0" 2'-1" 1'1" 5'-7" 5'-8" | VII | 2' level | 3'-10" | 75.00 | 31.40 | 3'-6" | 7'-0" | 39.20 | | | | 4'-1" | 75.70 | 31.80 | 3'-5" | 6'-10" | |
| | | | | | | 2:1 | | 89.30 | 44.30 | 3'-0" | 7'-6" | 45.00 | | | | | 90.10 | 44.70 | 3'-0" | 7'-6" | |
| | | | | | | 1½:1 | | 78.10 | 32.90 | 3'-6" | 10'-6" | 38.10 | | | | | 78.80 | 33.30 | 3'-5" | 10'-3" | |

← See H'so Concrete Piles

**DESIGN DATA:**

*Weight of earth = 120 lbs. per cu. ft. Equivalent fluid pressure, with 2 ft. Level Surcharge = 27 to 36 lbs. per sq. ft. per ft. of height.*

*Horizontal and Vertical. Earth Pressures for 2:1 unlimited and 1½:1 limited are from A.R.E.A. graph. Appendix C 8-5-18, Soil Type I.*

*Lateral resistance (H') is limited to 13$^k$ each pile plus value of component of battered piles at 1:3.*

*Pile spacing P and Q is max. Reduce to suit length of footing.*

*Min. distance between any two piles is 3'-0".*

*Distance between center line of pile and edge of footing 1'-6" min., except 1'-4" min. for H = 4' to 8'.*

*For details, dimensions, and reinforcement see Type I Cantilever Retaining Wall.*

*The design assumes a lateral resistance of 13$^k$ per pile, if the allowable resistance is less, the pile spacing or batter must be adjusted to provide the proper lateral resistance.*

*Note*

*2:1 surcharges are unlimited*

*1½:1 surcharges are limited as follows :-*

*H4 & 6 Unlimited*

*H8 & above 7'-0"*

*Subscript 90 indicates 45 ton piles.*

*Subscript 64 indicates 32 ton piles.*

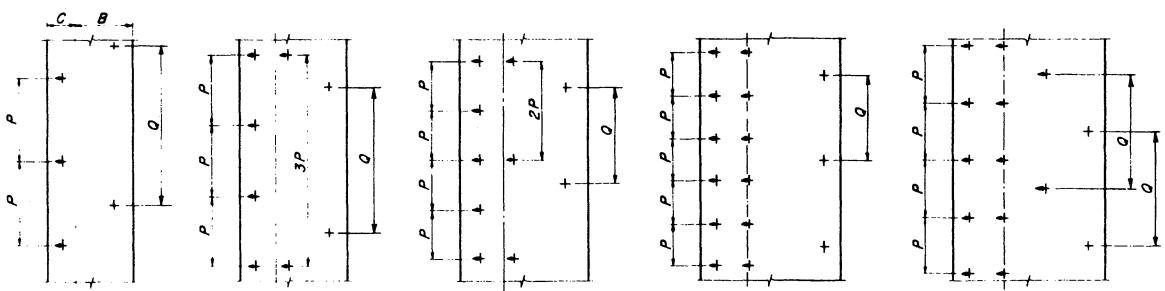


PLAN TYPE I — PLAN TYPE II — PLAN TYPE III — PLAN TYPE IV — PLAN TYPE V

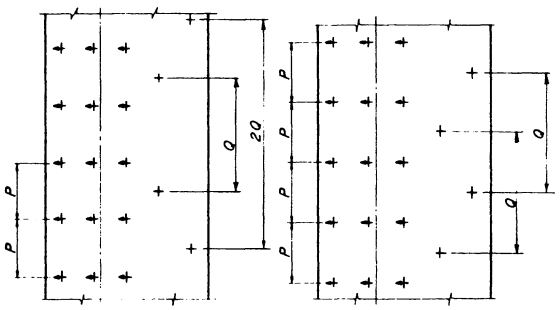


PLAN TYPE VI — PLAN TYPE VII

FOR OFFICE USE ONLY

BRIDGE DEPARTMENT
DESIGN SECTION
Section
Supervisor
DESIGN By
Checked
DETAILS By
Checked
QUANTITIES By
Checked

STATE OF CALIFORNIA
DEPARTMENT OF PUBLIC WORKS
DIVISION OF HIGHWAYS

PILE LAYOUT

TYPE I RETAINING WALL (H4-36)

SCALE | BRIDGE | FILE | DRAWING

PREL. DRAWING No. P

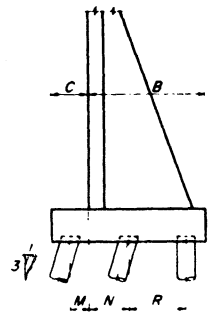


TYPICAL SECTION

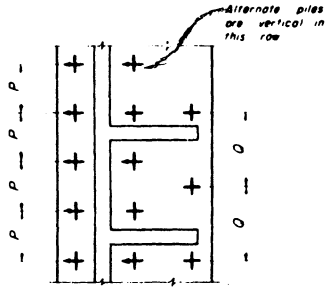


PLAN
H = 18' to 22'

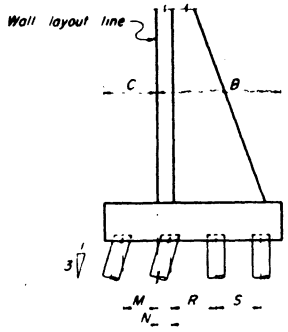


TYPICAL SECTION

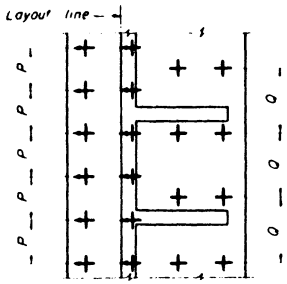


PLAN
H = 24' to 28'

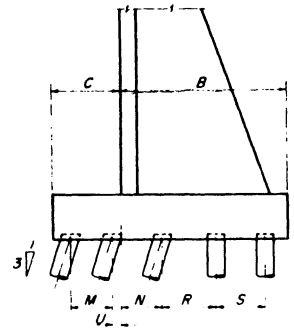


TYPICAL SECTION

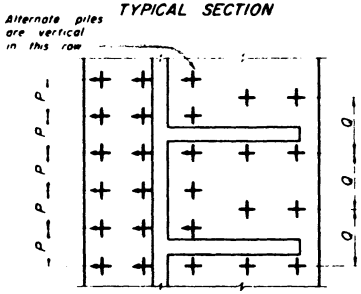


PLAN
H = 30' to 36'

**DESIGN DATA:** Piles are spaced for Type 3 Counterfort Retaining Wall.

Weight of earth = 120 lbs per cu ft and equivalent fluid pressure of 27 to 36 lbs per sq ft per ft of height.

Lateral resistance of each pile in bending is limited to 15% of axial pile load for 40 to 64 kip piles, 12% for 70 or 80 kip piles, and 10% for 90 kip piles. Balance of lateral forces taken by battered piles. Batter to be adjusted to suit design conditions.

Pile spacing P and Q is max. Reduce to suit length of footing.

If the allowable lateral resistance of piles used is less than values listed in Design Data, the pile spacing or batter must be adjusted to provide the proper lateral resistance.

Min distance between any two piles is 3'-0"

Distance between center line pile and edge of footing 1'-6" min.

For details, dimensions, and reinforcement see Type 3 Counterfort Retaining Wall.

**TABLE OF PILE SPACING**

| PILE LOAD — KIPS | | H | 18' | 20' | 22' | 24' | 26' | 28' | 30' | 32' | 34' | 36' |
|---|---|---|---|---|---|---|---|---|---|---|---|---|
| | | C | 2'-10 1/2" | 3'-1 1/2" | 3'-4 1/2" | 3'-7 1/2" | 3'-10 1/2" | 4'-1 1/2" | 4'-4 1/2" | 4'-7 1/2" | 4'-10 1/2" | 5'-1 1/2" |
| | | B | 8'-7 1/2" | 9'-4 1/2" | 10'-1 1/2" | 10'-10 1/2" | 11'-7 1/2" | 12'-4 1/2" | 13'-1 1/2" | 13'-10 1/2" | 14'-7 1/2" | 15'-4 1/2" |
| | | M | 1'-4 1/2" | 1'-7 1/2" | 1'-10 1/2" | 2'-1 1/2" | 2'-4 1/2" | 2'-7 1/2" | 2'-10 1/2" | 3'-0" | 3'-0" | 3'-6" |
| | | N | 2'-0 1/2" | 1'-11 1/2" | 2'-4 1/2" | 0'-10 1/2" | 0'-11 1/2" | 0'-10 1/2" | 3'-1 1/2" | 3'-1 1/2" | 3'-1 1/2" | 3'-4 1/2" |
| | | R | 4'-5" | 5'-5" | 5'-2" | 3'-6" | 3'-9" | 4'-0" | 3'-0" | 3'-9" | 4'-3" | 4'-6" |
| | | S | | | | 4'-3" | 4'-6" | 5'-3" | 3'-9" | 4'-0" | 4'-6" | 4'-6" |
| | | U | | | | | | | *0'-1 1/2" | 0'-1 1/2" | 0'-4 1/2" | 0'-1 1/2" |
| | 40 | P | 3'-10" | 3'-4" | 3'-0" | 3'-0" | | | | | | |
| | 48 | P | 4'-8" | 4'-0" | 3'-6" | 3'-8" | 3'-2" | 2'-10" | 3'-2" | | | |
| | 56 | P | 5'-6" | 4'-8" | 4'-0" | 4'-4" | 3'-8" | 3'-4" | 3'-8" | 3'-4" | | |
| | 64 | P | 6'-2" | 5'-4" | 4'-6" | 5'-0" | 4'-2" | 3'-10" | 4'-2" | 3'-10" | 3'-4" | 3'-0" |
| | 70 | P | 6'-8" | 5'-10" | 5'-0" | 5'-4" | 4'-8" | 4'-2" | 4'-8" | 4'-2" | 3'-8" | 3'-4" |
| | 80 | P | 7'-8" | 6'-8" | 5'-8" | 6'-0" | 5'-2" | 4'-8" | 5'-2" | 4'-8" | 4'-2" | 3'-10" |
| | 90 | P | 8'-8" | 7'-4" | 6'-4" | 6'-8" | 5'-6" | 5'-0" | 5'-8" | 5'-0" | 4'-6" | 4'-2" |
| | 40 | Q | 5'-9" | 5'-0" | 4'-6" | 4'-0" | 4'-0" | | 4'-0" | | | |
| | 48 | Q | 7'-0" | 6'-0" | 5'-3" | 5'-6" | 4'-9" | 4'-3" | 4'-9" | 4'-3" | 3'-9" | |
| | 56 | Q | 8'-3" | 7'-0" | 6'-0" | 6'-6" | 5'-6" | 5'-0" | 5'-6" | 5'-0" | 4'-3" | 4'-0" |
| | 64 | Q | 9'-3" | 8'-0" | 6'-9" | 7'-6" | 6'-3" | 5'-9" | 6'-3" | 5'-9" | 5'-0" | 4'-6" |
| | 70 | Q | 10'-0" | 8'-9" | 7'-6" | 8'-0" | 7'-0" | 6'-3" | 7'-0" | 6'-3" | 5'-6" | 5'-0" |
| | 80 | Q | 11'-6" | 10'-0" | 8'-6" | 9'-0" | 7'-9" | 7'-0" | 7'-9" | 7'-0" | 6'-3" | 5'-9" |
| | 90 | Q | 13'-0" | 11'-0" | 9'-6" | 10'-0" | 8'-3" | 7'-6" | 8'-6" | 7'-6" | 6'-9" | 6'-3" |

* Measured on opposite side of layout line from that shown in typical section.

For office use only.

BRIDGE DEPARTMENT
··· DESIGN SECTION ···
Project Designer
Chief Designer
DESIGN
DETAILS
QUANTITIES
SPECIFICATIONS

STATE OF CALIFORNIA
DEPARTMENT OF PUBLIC WORKS
DIVISION OF HIGHWAYS

PILE SPACING

TYPE 3 COUNTERFORT RETAINING WALL

SCALE None | BRIDGE | FILE | DRAWING

PREL DRAWING NO P

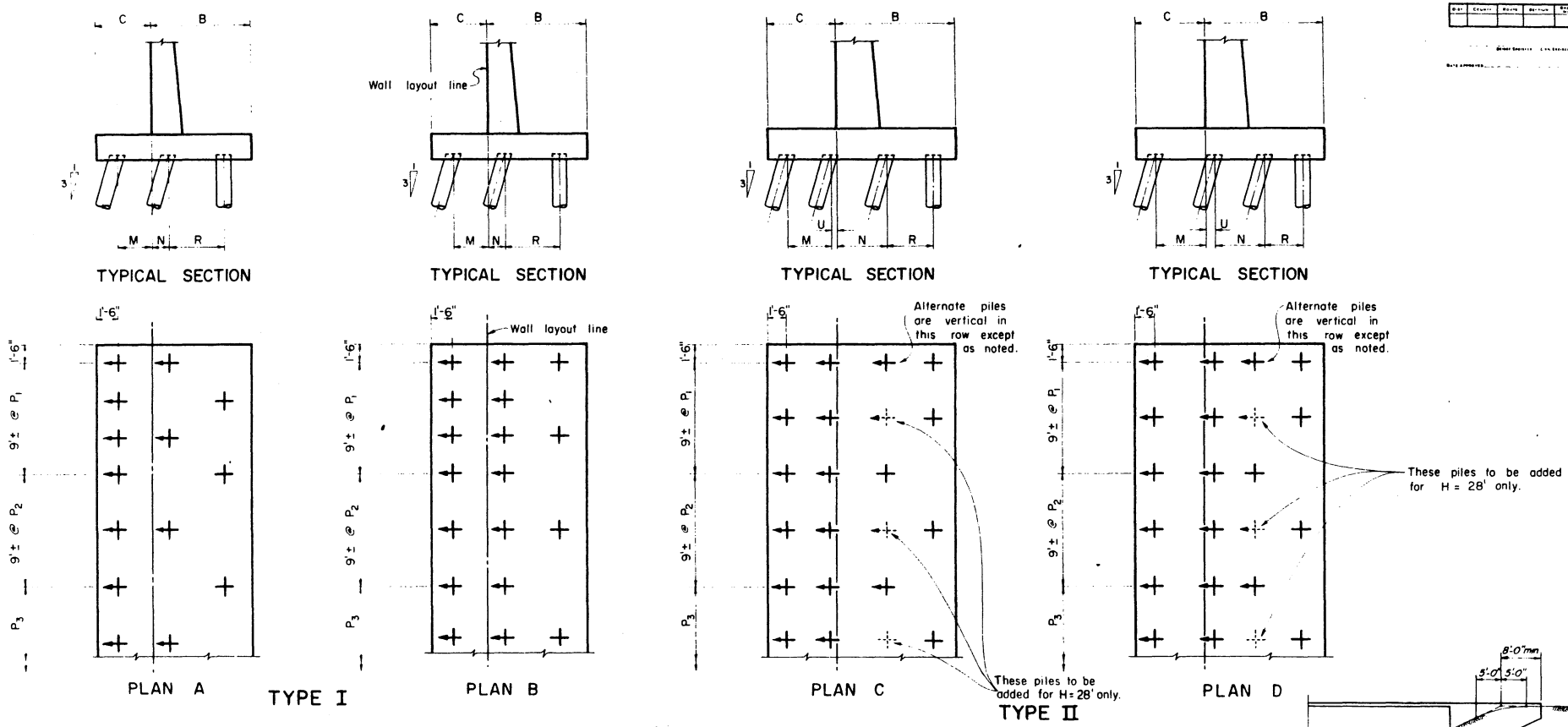


| TABLE OF PILE SPACING | | | | | | | | | | |
|---|---|---|---|---|---|---|---|---|---|---|
| H | 20' | | 22' | | 24' | | 26' | | 28' | |
| Pile Load kips | 64 | 90 | 64 | 90 | 64 | 90 | 64 | 90 | 64 | 90 |
| C | 3'-6" | 3'-6" | 4'-6" | 4'-0" | 4'-11" | 4'-5" | 5'-3" | 4'-9" | 5'-7" | 5'-1" |
| B | 7'-0" | 7'-0" | 8'-0" | 8'-0" | 8'-10" | 8'-10" | 9'-6" | 9'-6" | 10'-2" | 10'-2" |
| M | 2'-0" | 2'-0" | 3'-0" | 2'-6" | 3'-0" | 2'-11" | 3'-8" | 3'-3" | 4'-0" | 3'-7" |
| N | 1'-0" | 1'-0" | 1'-0" | 1'-0" | 3'-7" | 3'-6" | 4'-3" | 3'-9" | 4'-2" | 3'-8" |
| R | 4'-6" | 4'-6" | 5'-6" | 5'-6" | 3'-9" | 3'-9" | 3'-9" | 3'-10" | 4'-6" | 4'-7" |
| U | | | | | 0'-5" | 0'-1" | 0'-1" | 0'-5" | 0'-1" | 0'-5" |
| $P_1$ | 3'-0" | 4'-9" | 3'-0" | 3'-3" | 3'-0" | 4'-3" | 3'-0" | 3'-7" | 3'-0" | 3'-3" |
| $P_2$ | 3'-9" | 5'-3" | 3'-6" | 4'-1" | 4'-5" | 6'-0" | 4'-0" | 4'-8" | 3'-6" | 4'-7" |
| $P_3$ | 4'-3" | 6'-0" | 4'-2" | 5'-7" | 4'-10" | 6'-6" | 4'-3" | 5'-8" | 3'-9" | 5'-3" |
| PLAN | A | A | B | A | C | D | C | D | C | D |

DESIGN DATA:

Weight of earth = 120 lbs per cu. ft. and equivalent fluid pressure of 27 to 36 lbs. per sq. ft. per ft. of height.

Passive pressure of earth on outer face of wall is considered in this design. Lateral resistance of each pile in bending is limited to 15% of axial pile load for 64 kip piles and 10% for 90 kip piles. Balance of lateral forces taken by battered piles.

Pile spacing $P_1$, $P_2$ and $P_3$ is maximum. Reduce to suit length of footing.

Min. distance between any two piles is 3'-0".

Distance between center of pile and edge of footing 1'-6" min.

For details, dimensions, and reinforcement see Wingwalls — Pile Footing

Note: If 32 ton piles are used, revise C and W dimensions on Standard Plan.

If the allowable lateral resistance of piles used is less than values listed in Design Data, the pile spacing or batter must be adjusted to provide the proper lateral resistance.

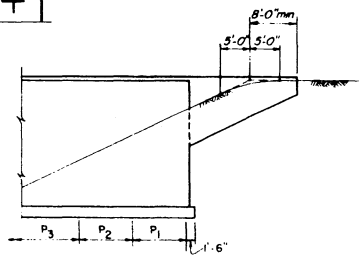


TYPICAL ELEVATION
FOR OFFICE USE ONLY

BRIDGE DEPARTMENT
··· DESIGN SECTION ···
Project Designer
Chief Designer
DESIGN
DETAILS
QUANTITIES
SPECIFICATIONS

STATE OF CALIFORNIA
DEPARTMENT OF PUBLIC WORKS
DIVISION OF HIGHWAYS

PILE SPACING

WINGWALLS — PILE FOOTING

SCALE None | BRIDGE | FILE | DRAWING

PREL. DRAWING NO. P

# Pile Footings

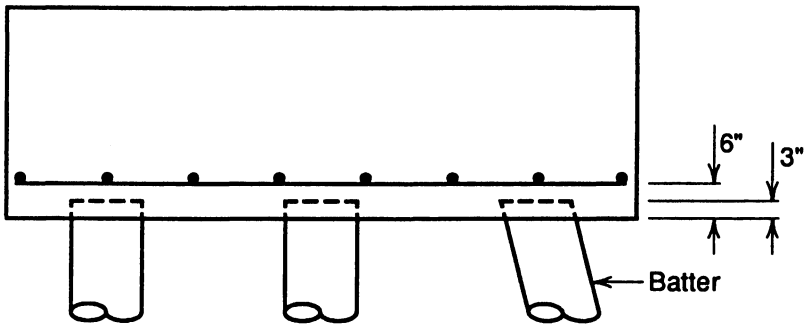


**Concrete Piles**

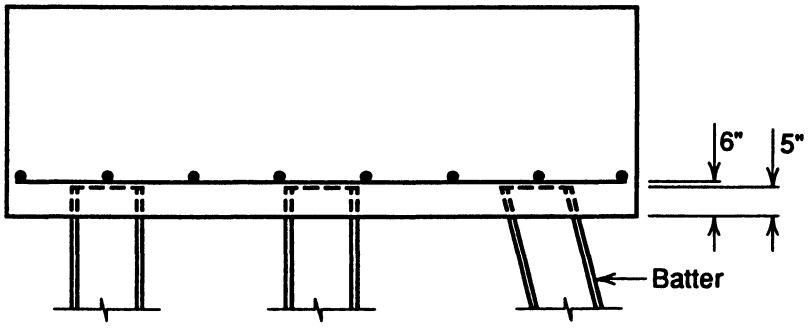


**Steel Piles**

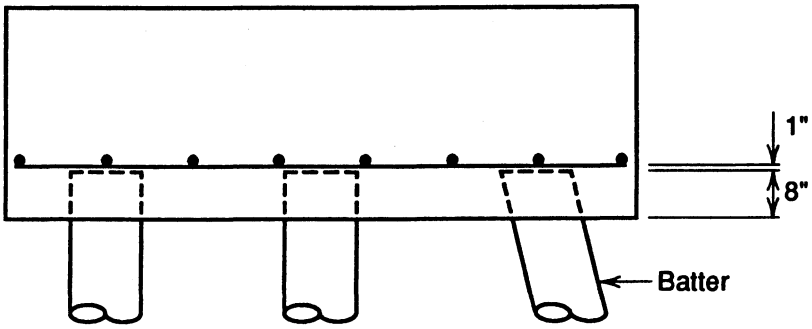


**Timber Piles**

# Piles at Abutment Corners

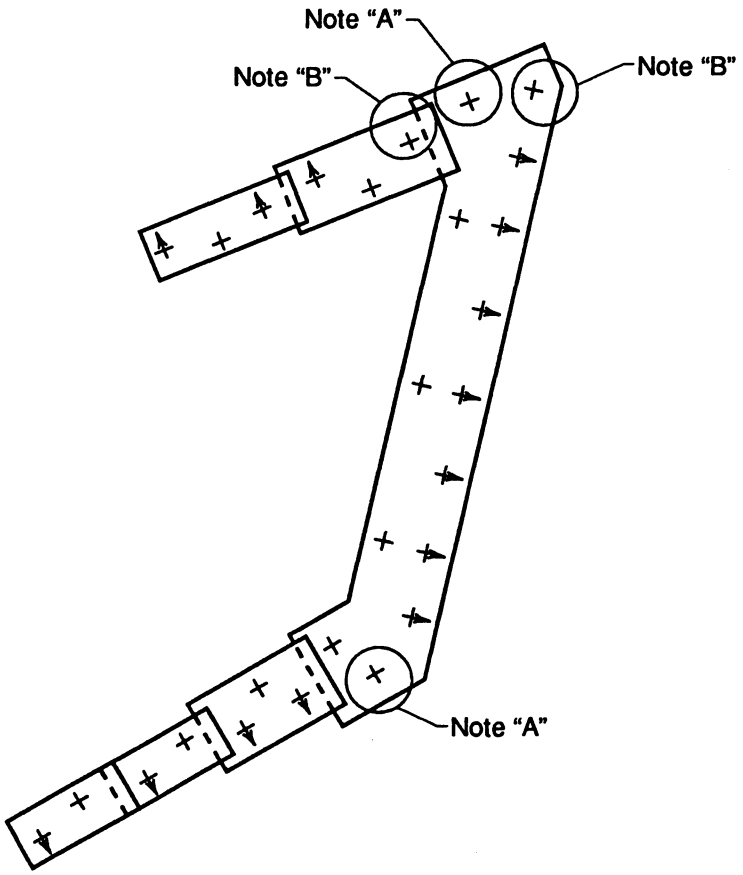


Note "A" Battered pile at this location is unnecessary. Pile should be vertical.

Note "B" Use vertical rather than battered piles at sharp acute corners where it may be difficult to drive battered piles.

# Bearing Pad Location at Anchorage Blockout

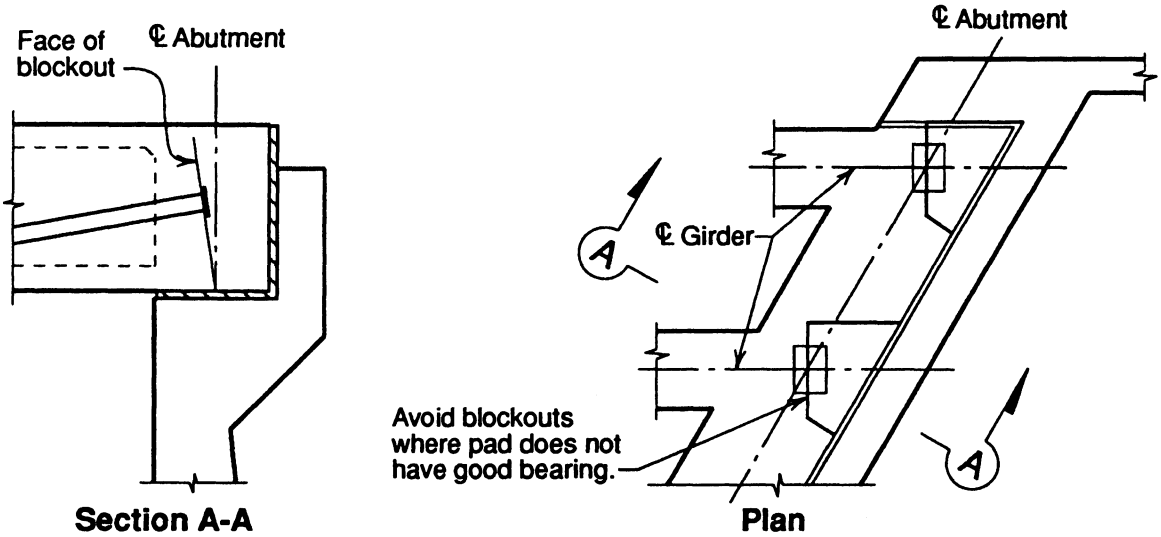


**INCORRECT**

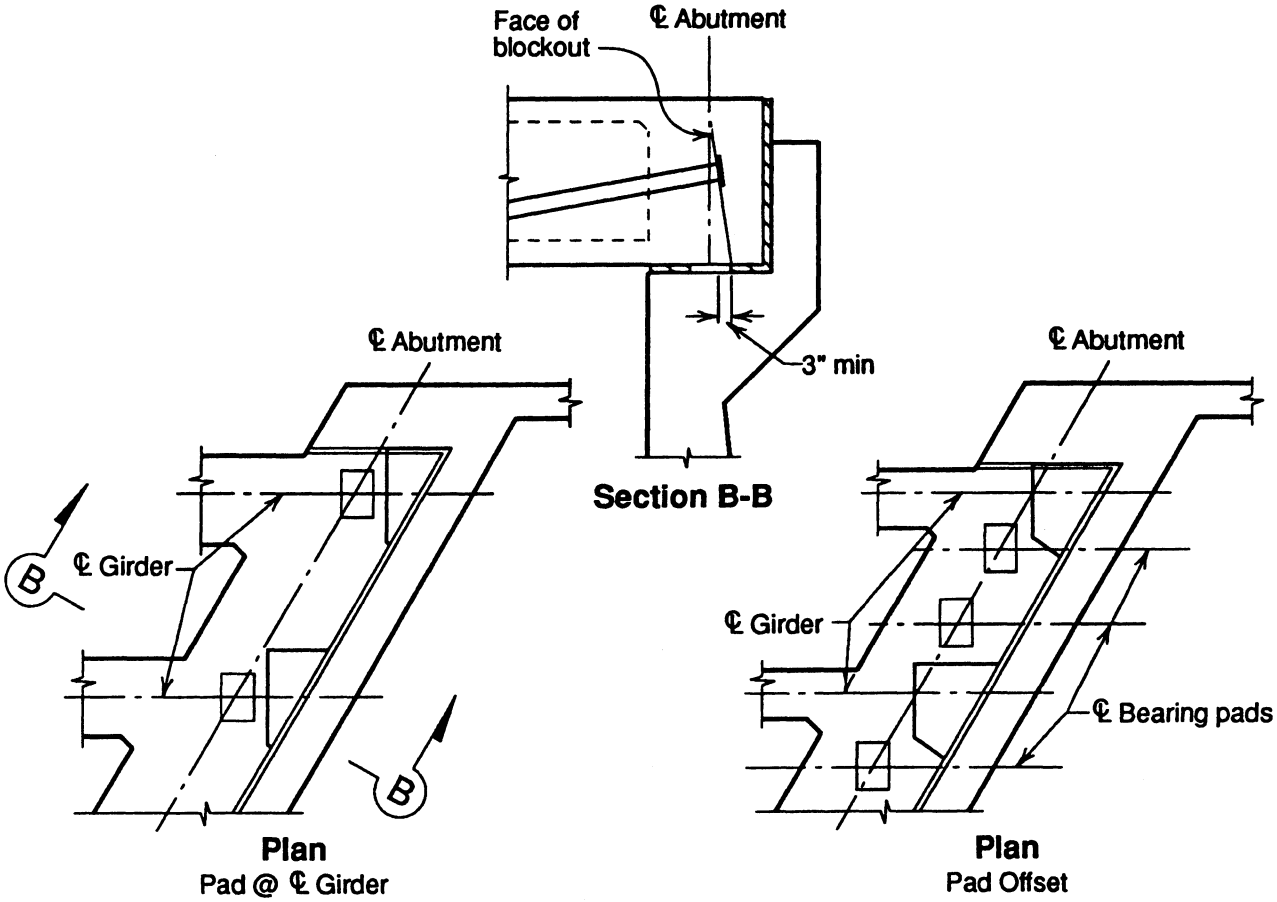


**CORRECT**

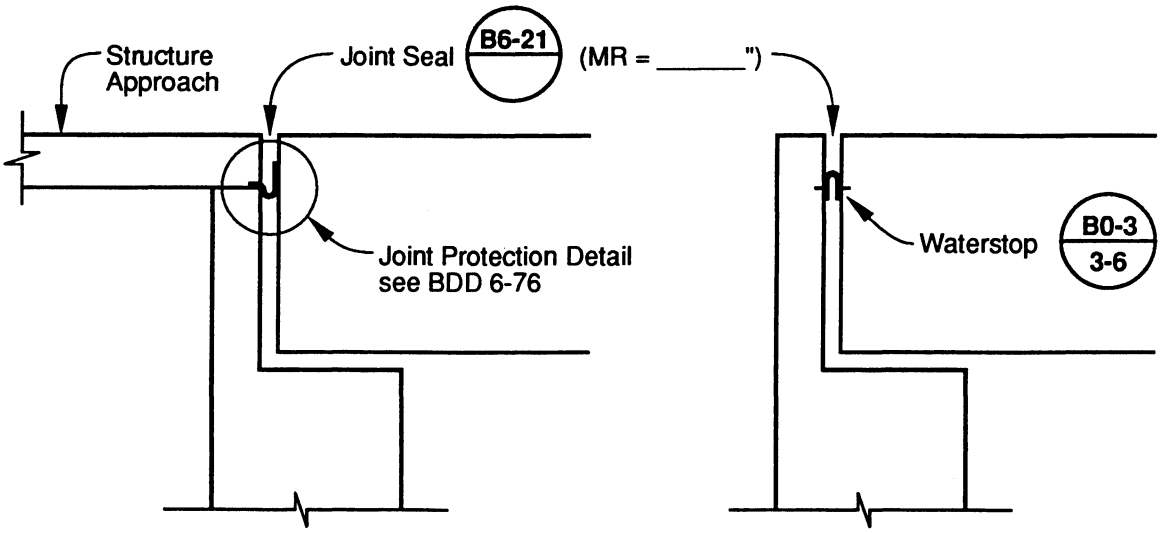


WITH STRUCTURE APPROACH

WITHOUT STRUCTURE APPROACH

**MR ≤ 2"**

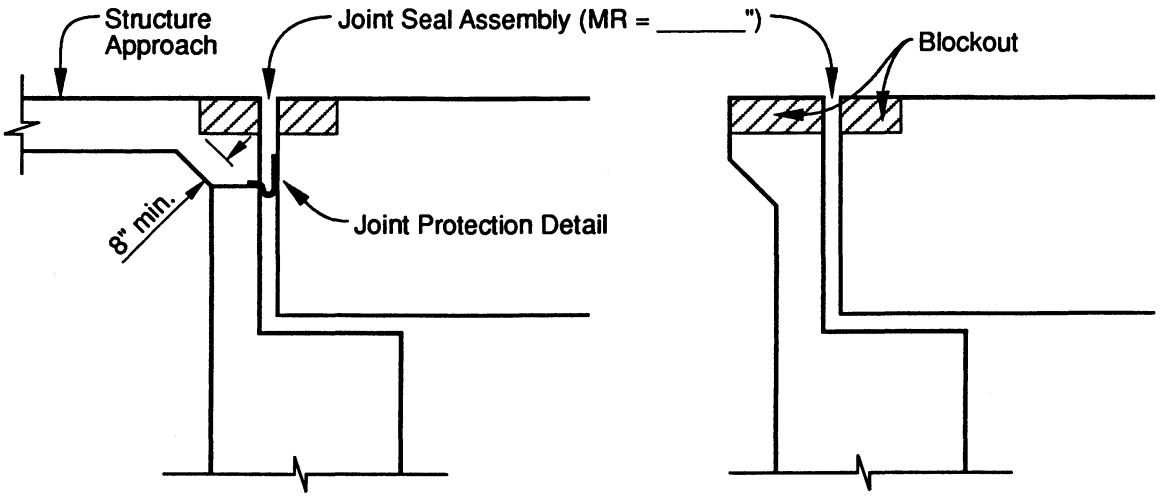


WITH STRUCTURE APPROACH

WITHOUT STRUCTURE APPROACH

**MR ≥ 2 ½"**

## SEALED JOINTS

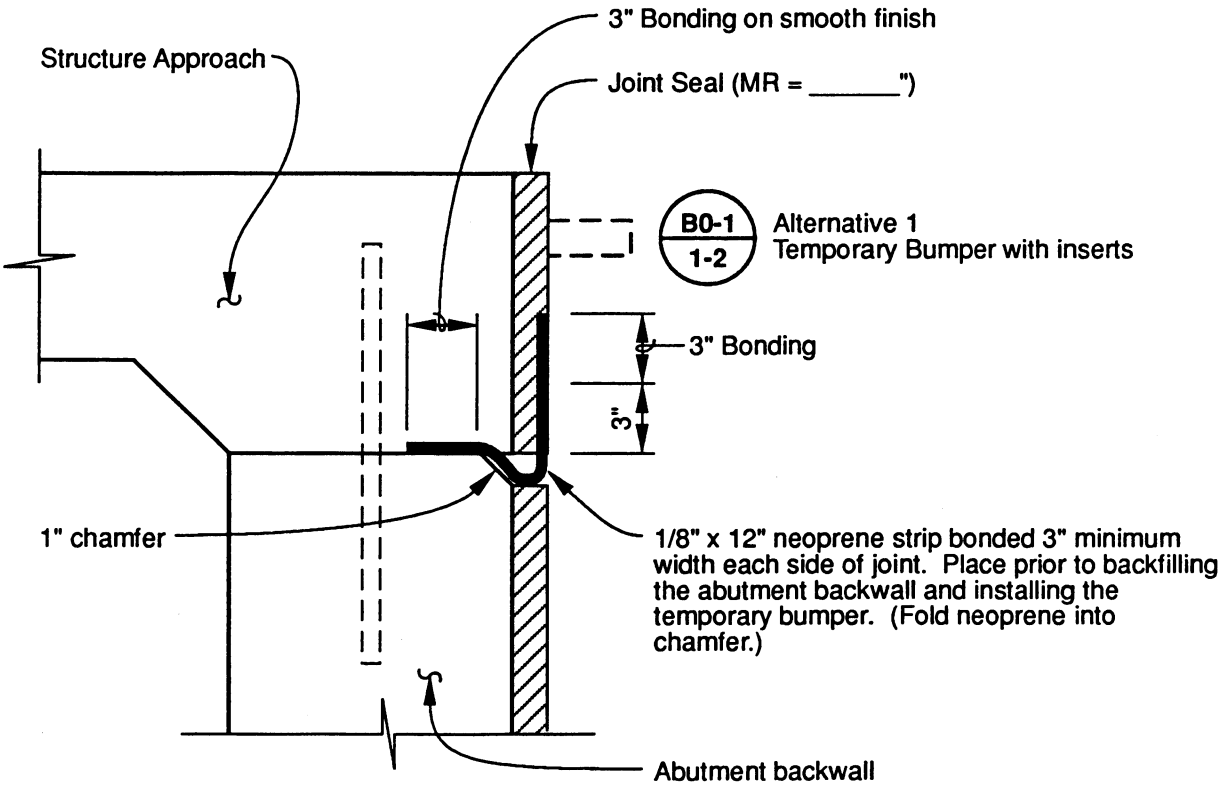


## JOINT PROTECTION DETAIL

NOTE:

1. Do not use waterstop B0-3 / 3-6 with this detail.
2. Estimate *12" Neoprene Strip* in linear feet.

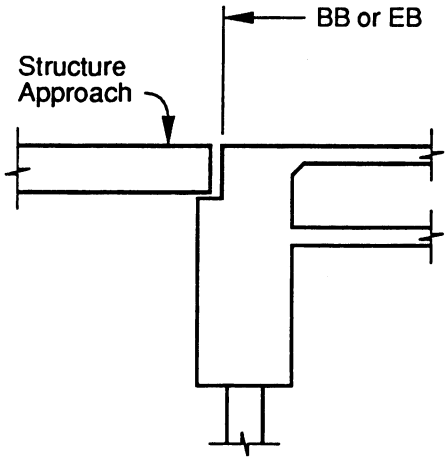


WITH STRUCTURE APPROACH

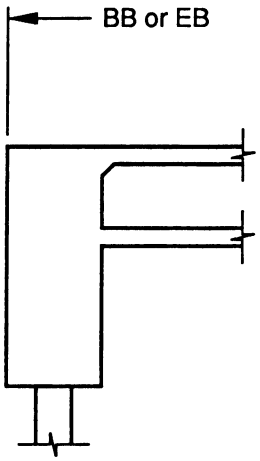


WITHOUT STRUCTURE APPROACH

**DIAPHRAGM ABUTMENT**

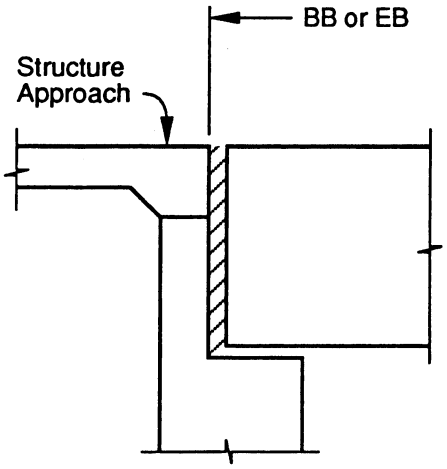


WITH STRUCTURE APPROACH

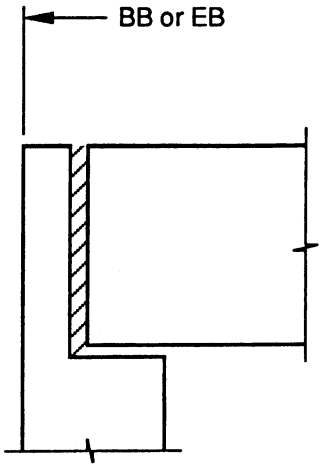


WITHOUT STRUCTURE APPROACH

**SEAT ABUTMENT**

## BB AND EB LOCATIONS

BB = Beginning of Bridge
EB = End of Bridge

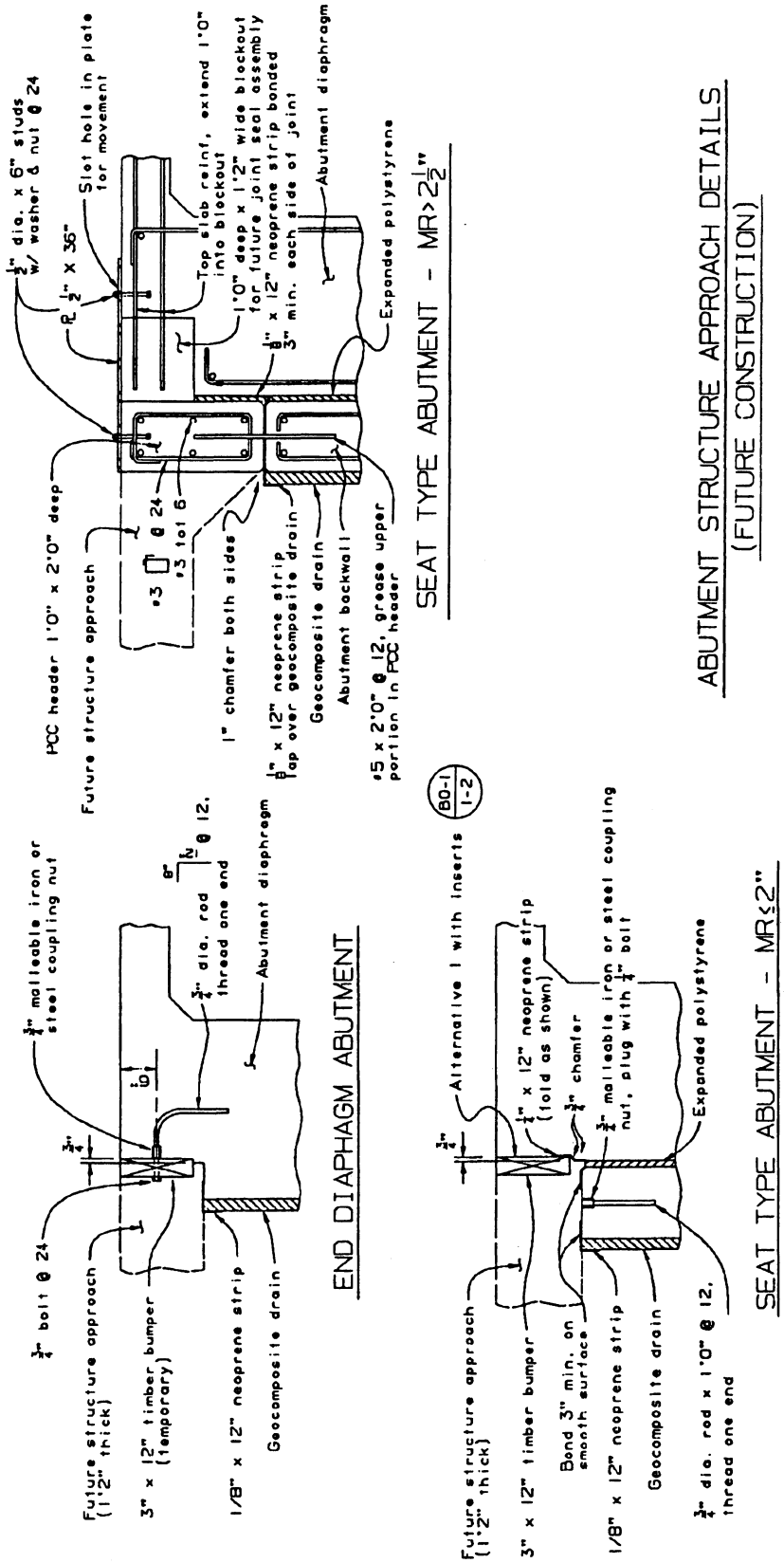
1/2" dia. x 6" studs w/ washer & nut @ 24
1/2" x 36"
Slot hole in plate for movement
Top slab reinf. extend 1'0" into blockout
1'0" deep x 1'2" wide blockout for future joint seal assembly
1/8" x 12" neoprene strip bonded 3" min. each side of joint
Abutment diaphragm
Expanded polystyrene
PCC header 1'0" x 2'0" deep
Future structure approach
#3 @ 24 #3 tot 6
1" chamfer both sides
1/8" x 12" neoprene strip lap over geocomposite drain
Geocomposite drain
Abutment backwall
#5 x 2'0" @ 12, grease upper portion in PCC header
SEAT TYPE ABUTMENT - MR>2 1/2"
ABUTMENT STRUCTURE APPROACH DETAILS
(FUTURE CONSTRUCTION)
3/4" malleable iron or steel coupling nut
3/4" dia. rod thread one end
@ 12.
Abutment diaphragm
3/4" bolt @ 24
Future structure approach (1'2" thick)
3" x 12" timber bumper (temporary)
1/8" x 12" neoprene strip
Geocomposite drain
END DIAPHAGM ABUTMENT
BO-1 1-2
Alternative 1 with inserts
1/8" x 12" neoprene strip (fold as shown)
3/4" chamfer
3/4" malleable iron or steel coupling nut, plug with 1/4" bolt
Expanded polystyrene
Future structure approach (1'2" thick)
3" x 12" timber bumper
Bond 3" min. on smooth surface
1/8" x 12" neoprene strip
Geocomposite drain
3/4" dia. rod x 1'0" @ 12, thread one end
SEAT TYPE ABUTMENT - MR≤2"

# CANTILEVERED WINGWALLS
## Minimum Soil Cover

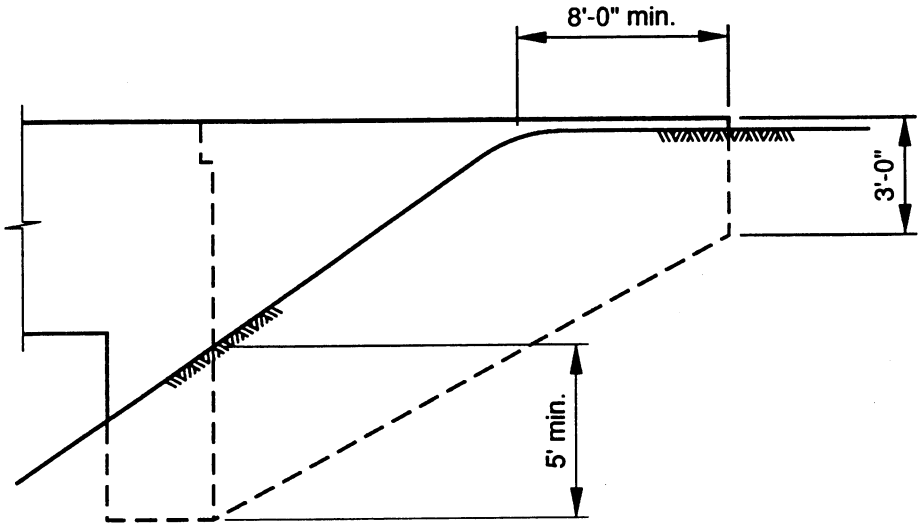


**ELEVATION**

# RETAINING WALL WINGWALL

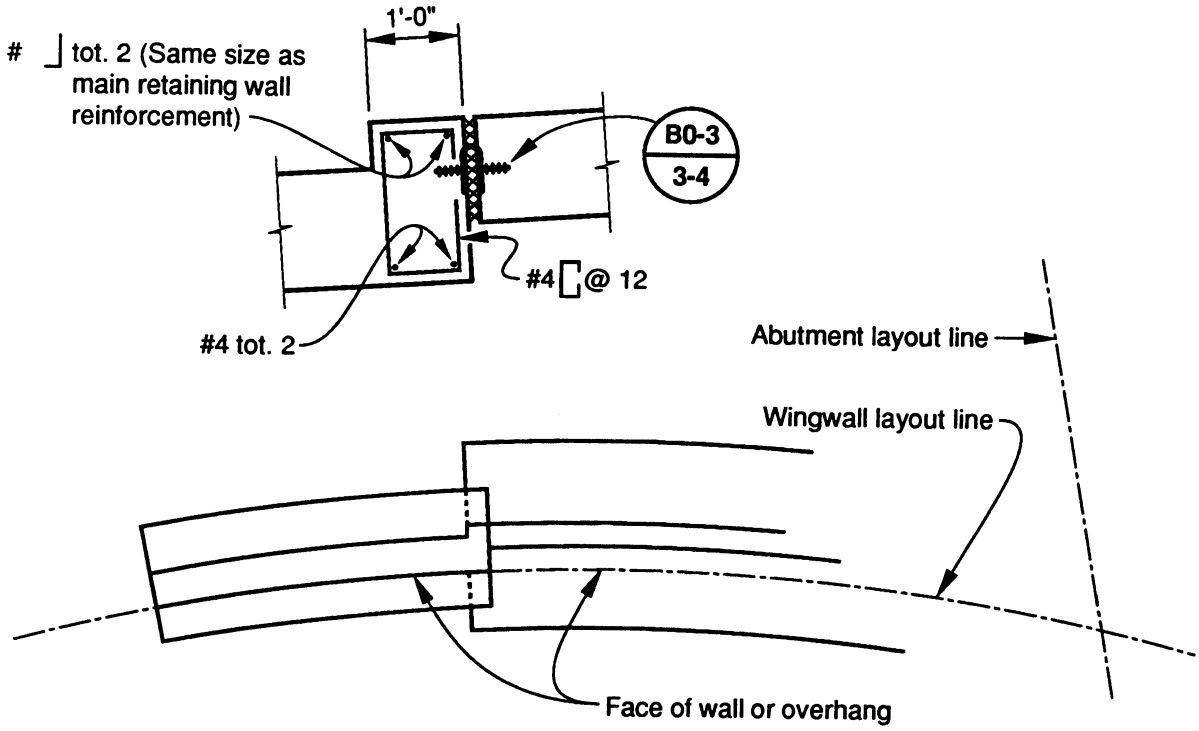


## WALL OFFSET

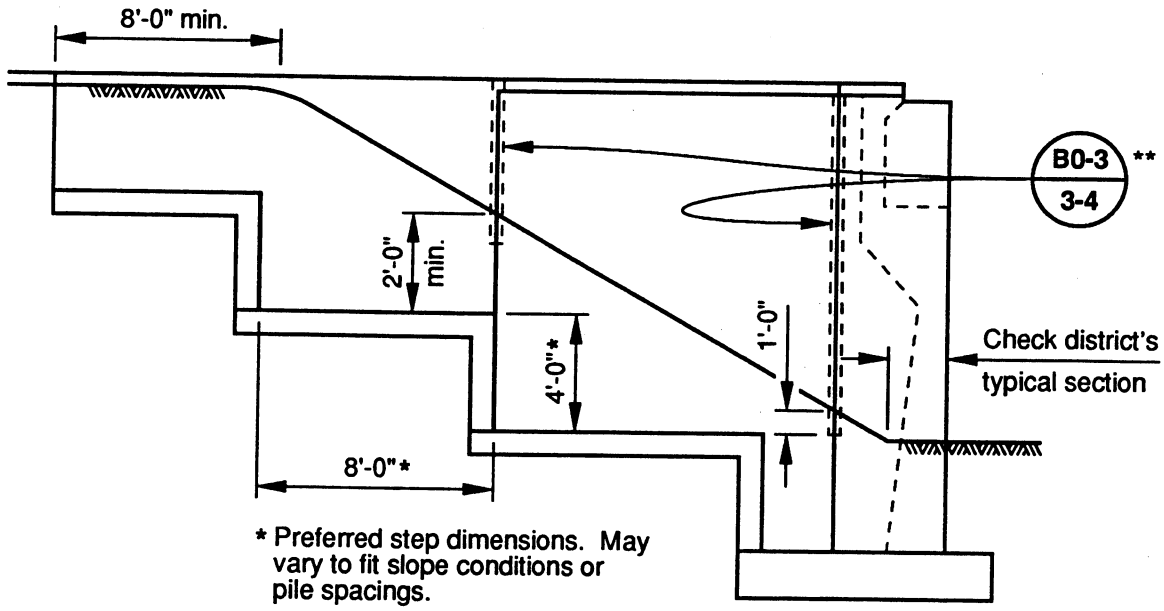


## WINGWALL ELEVATION

**Extend waterstop 6" into concrete barrier.

# ABUTMENT WINGWALL CORNERS

Tension reinforcement *should not* be bent around a re-entrant corner. The small amount of concrete cover is not sufficient to keep the reinforcing from straightening.

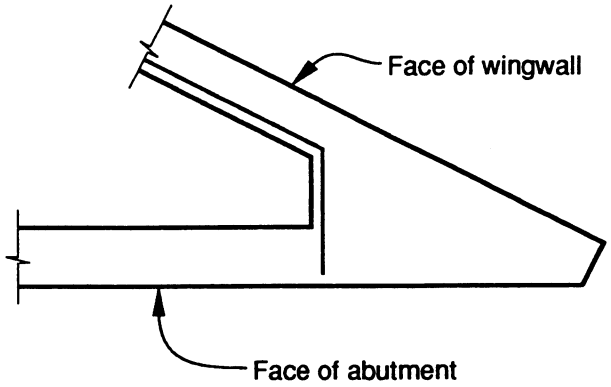


**– Incorrect –**

Reinforcement in each face *should* be straight and extend the required development length after it crosses the bar from the other direction. Standard practice for detailing reinforcement in *all* re-entrant corners and angle changes in members is shown below.

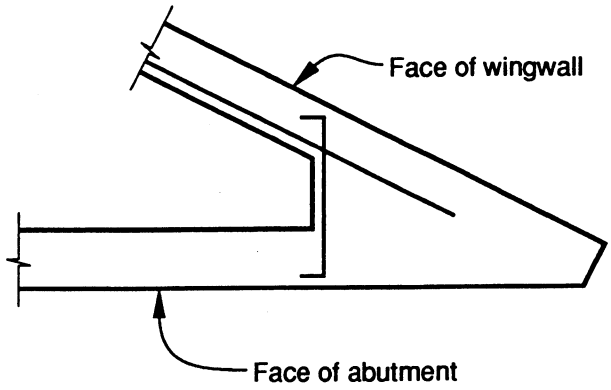


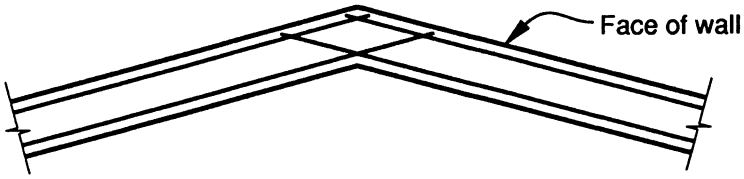

# SIDEWALK SUPPORT BRACKET

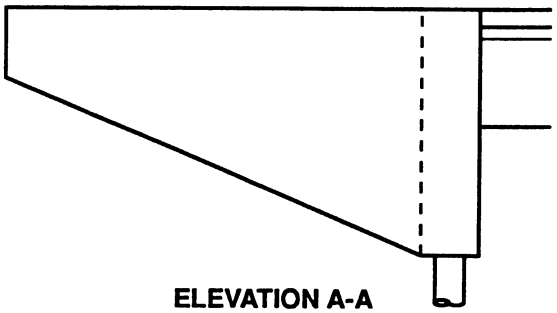

ELEVATION A-A

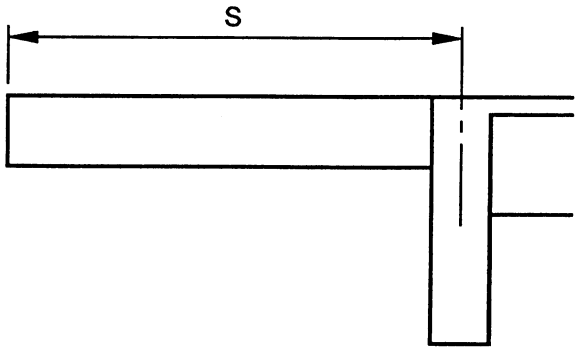


ELEVATION B-B

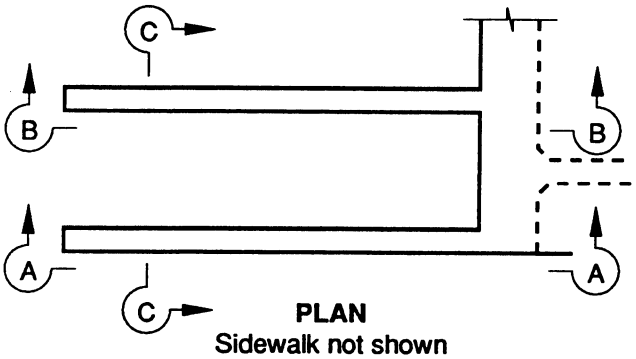


PLAN
Sidewalk not shown

| S | D Bars | E Bars |
|---|---|---|
| 12' | Bundle 4 #9 | 2 #4 |
| 14' | Bundle 4 #10 | 2 #4 |
| 16' | Bundle 2 #10, 2 #11 | 2 #8 |
| 18' | Bundle 4 #11 | 2 #11 |

Length of "D" bars = S + 6' or hook into abutment.

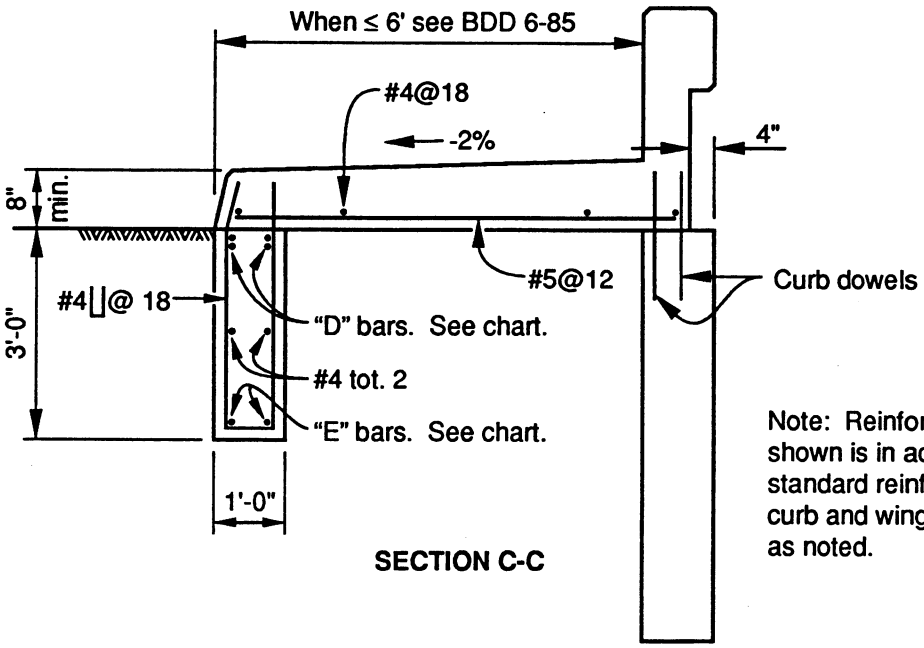


SECTION C-C

Note: Reinforcement shown is in addition to standard reinforcement in curb and wingwall except as noted.

TYPES 26 & 29

## SIDEWALK ON WINGWALL

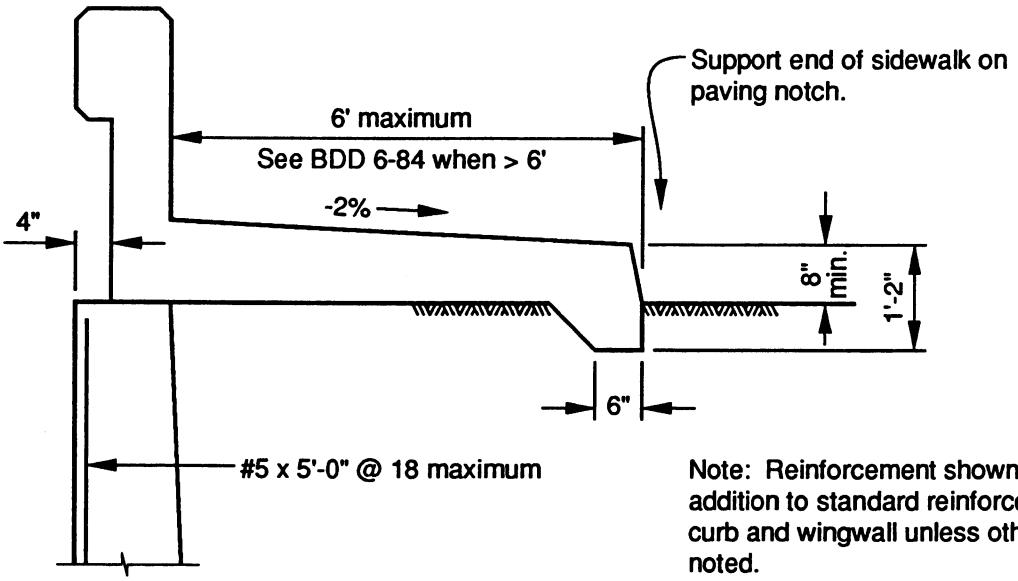


Note: Reinforcement shown is in addition to standard reinforcement in curb and wingwall unless otherwise noted.

**TYPES 26 & 29**

# CONCRETE BARRIER TYPE 25 ON WALLS

When Type 25 is to be placed on wingwalls or retaining walls, the wall must be detailed to alert the contractor of the additional work to be performed. Part of this information is on the Concrete Barrier Type 25 standard. Details below illustrate the minimum additional detail required.

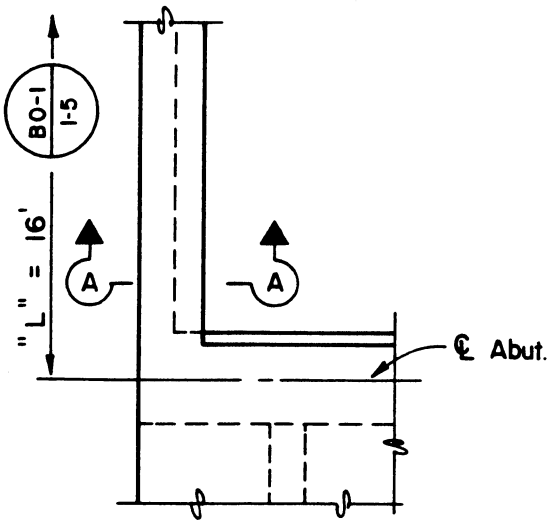


PART PLAN

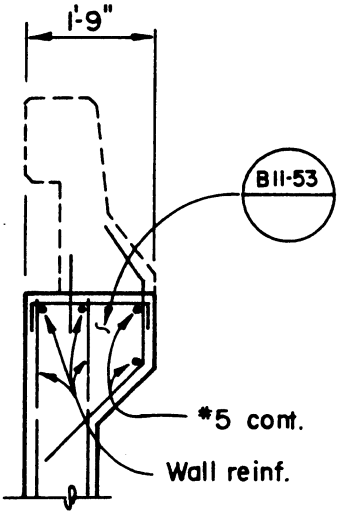


SECTION A-A

# DETAILING EXAMPLE

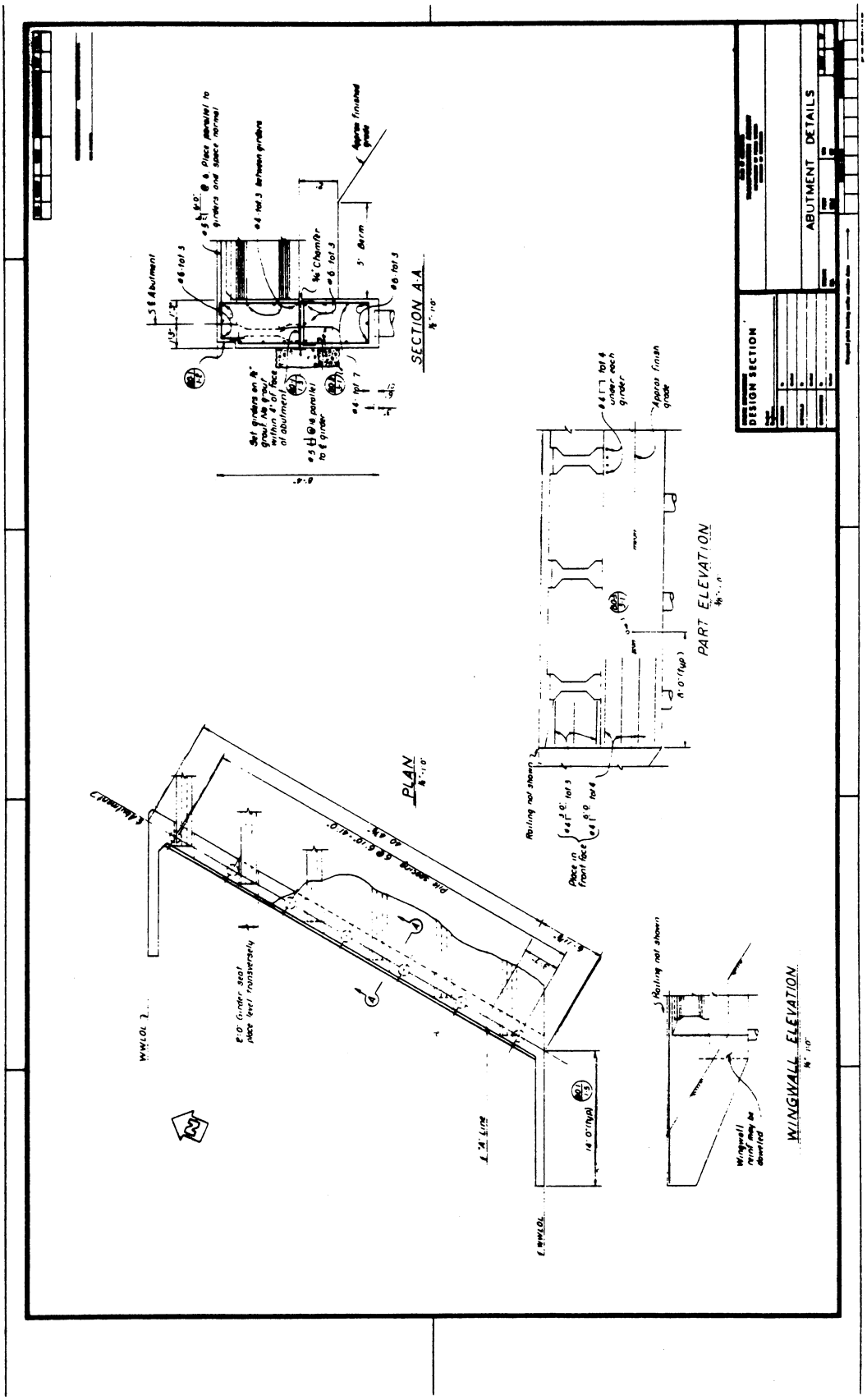


**DETAILS SHOWN ARE FOR EXAMPLE ONLY NOT TO BE USED FOR DESIGN PURPOSES**

# DETAILING EXAMPLE

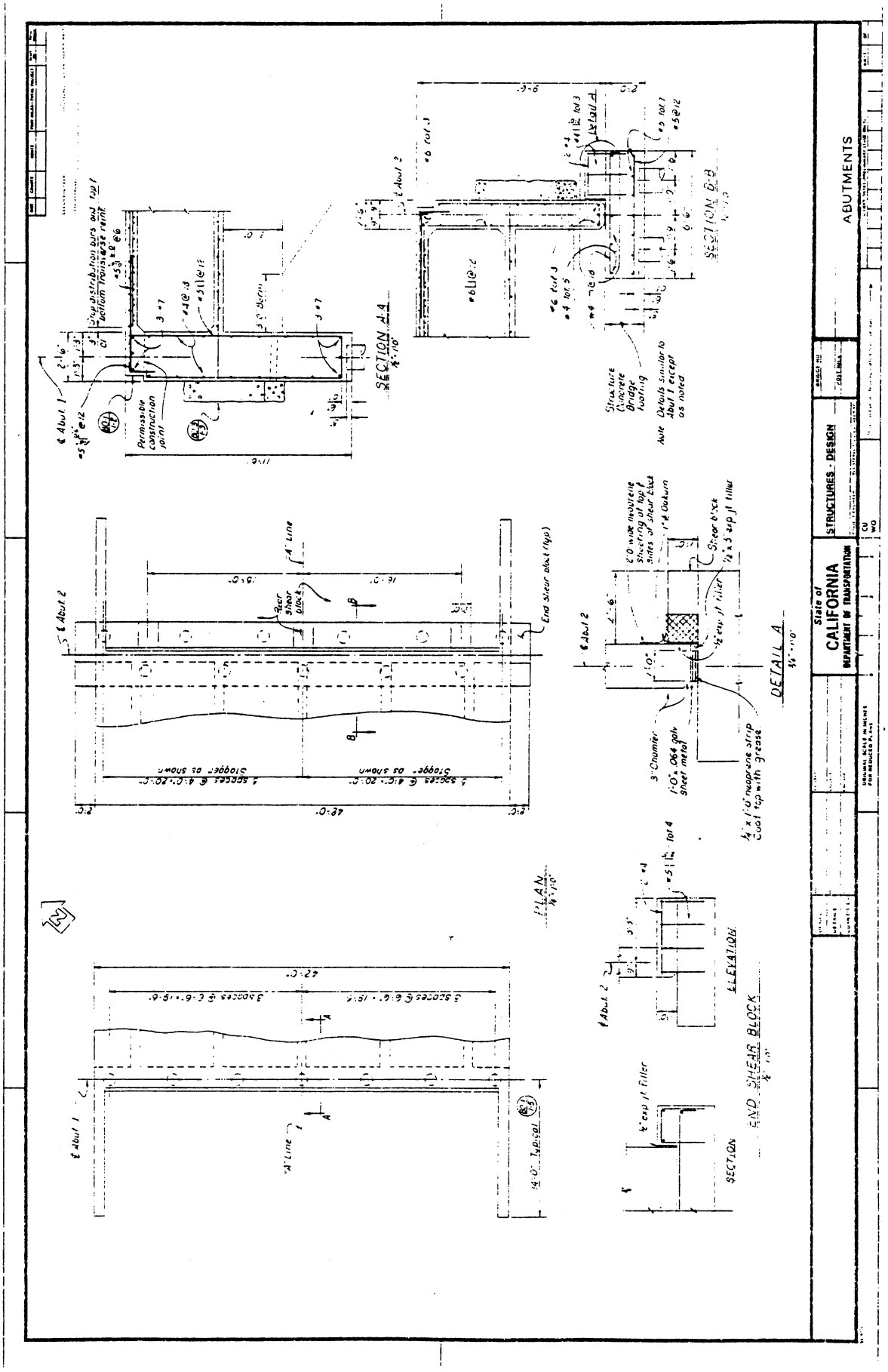


DETAILS SHOWN ARE FOR EXAMPLE ONLY
NOT TO BE USED FOR DESIGN PURPOSES

# DETAILING EXAMPLE

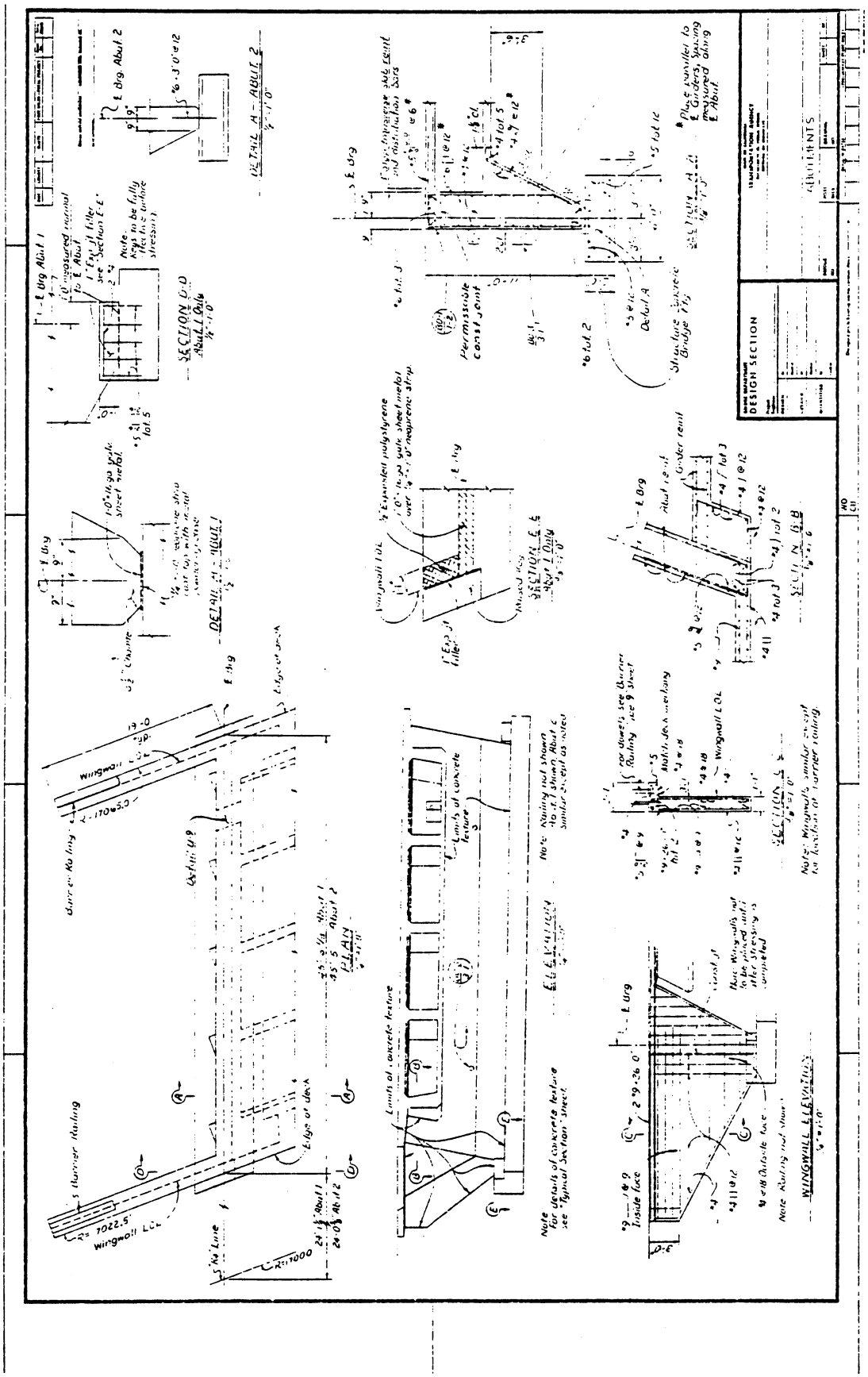


DETAILS SHOWN ARE FOR EXAMPLE ONLY
NOT TO BE USED FOR DESIGN PURPOSES

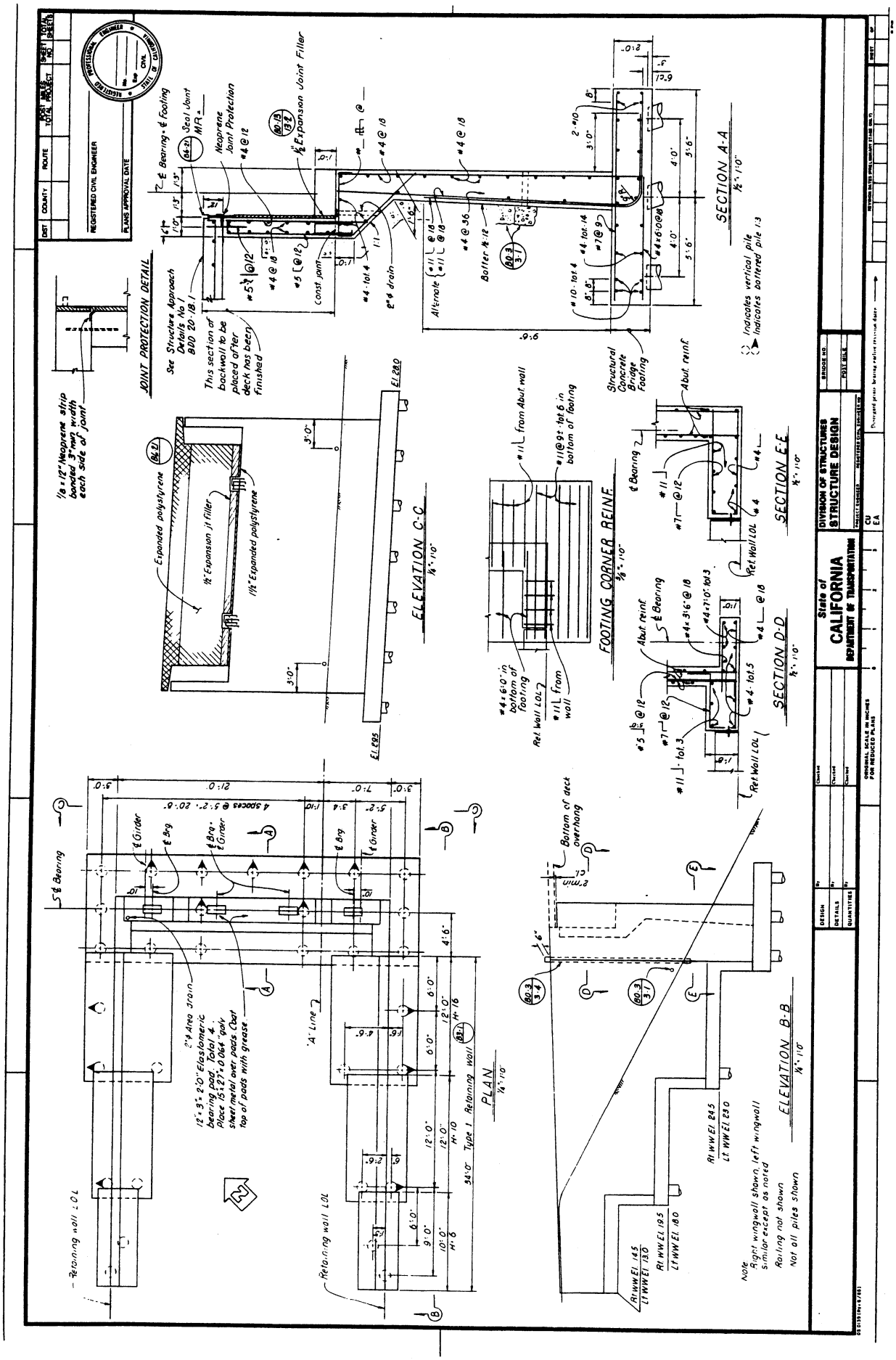
JOINT PROTECTION DETAIL
SECTION A-A
SECTION E-E
SECTION D-D
ELEVATION C-C
FOOTING CORNER REINF.
PLAN
ELEVATION B-B
Expanded polystyrene
Structural Concrete Bridge Footing
Retaining wall Type 1
Right wingwall shown, left wingwall similar except as noted
Railing not shown
Not all piles shown
Indicates vertical pile
Indicates battered pile
State of CALIFORNIA
DEPARTMENT OF TRANSPORTATION
DIVISION OF STRUCTURES
STRUCTURE DESIGN

# DETAILING EXAMPLE

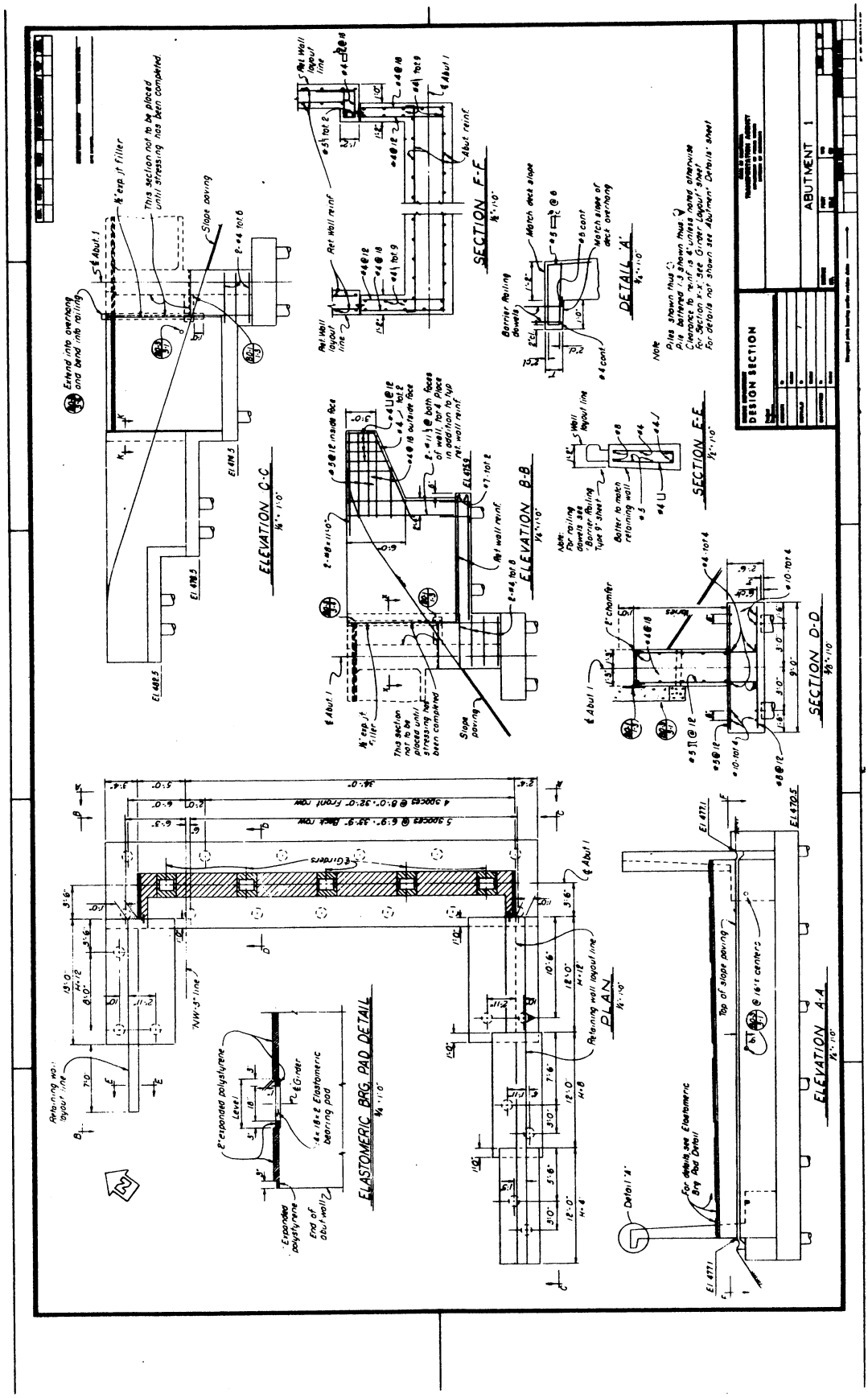


**DETAILS SHOWN ARE FOR EXAMPLE ONLY NOT TO BE USED FOR DESIGN PURPOSES**

# DETAILING EXAMPLE

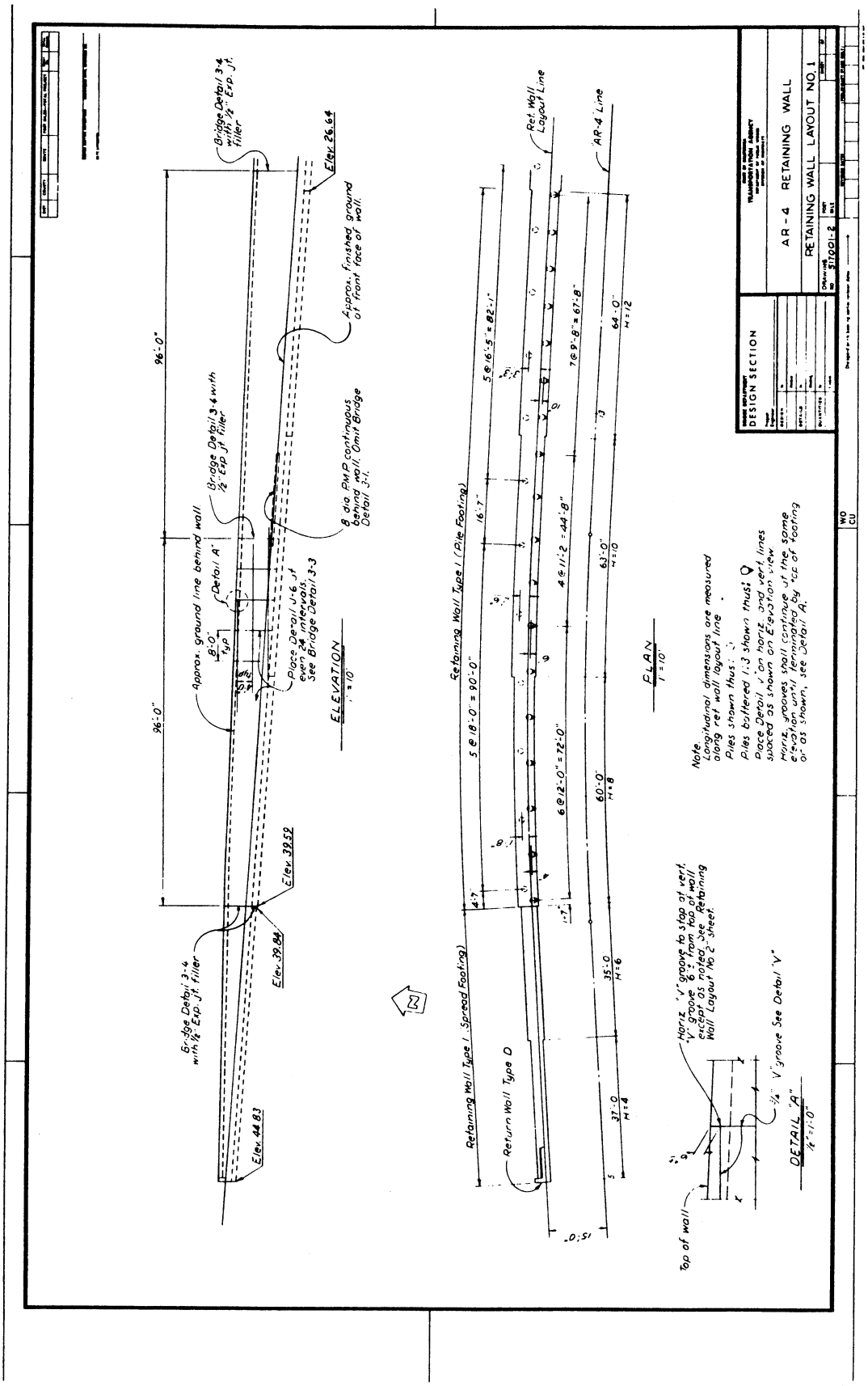


**DETAILS SHOWN ARE FOR EXAMPLE ONLY**
**NOT TO BE USED FOR DESIGN PURPOSES**

# DETAILING EXAMPLE

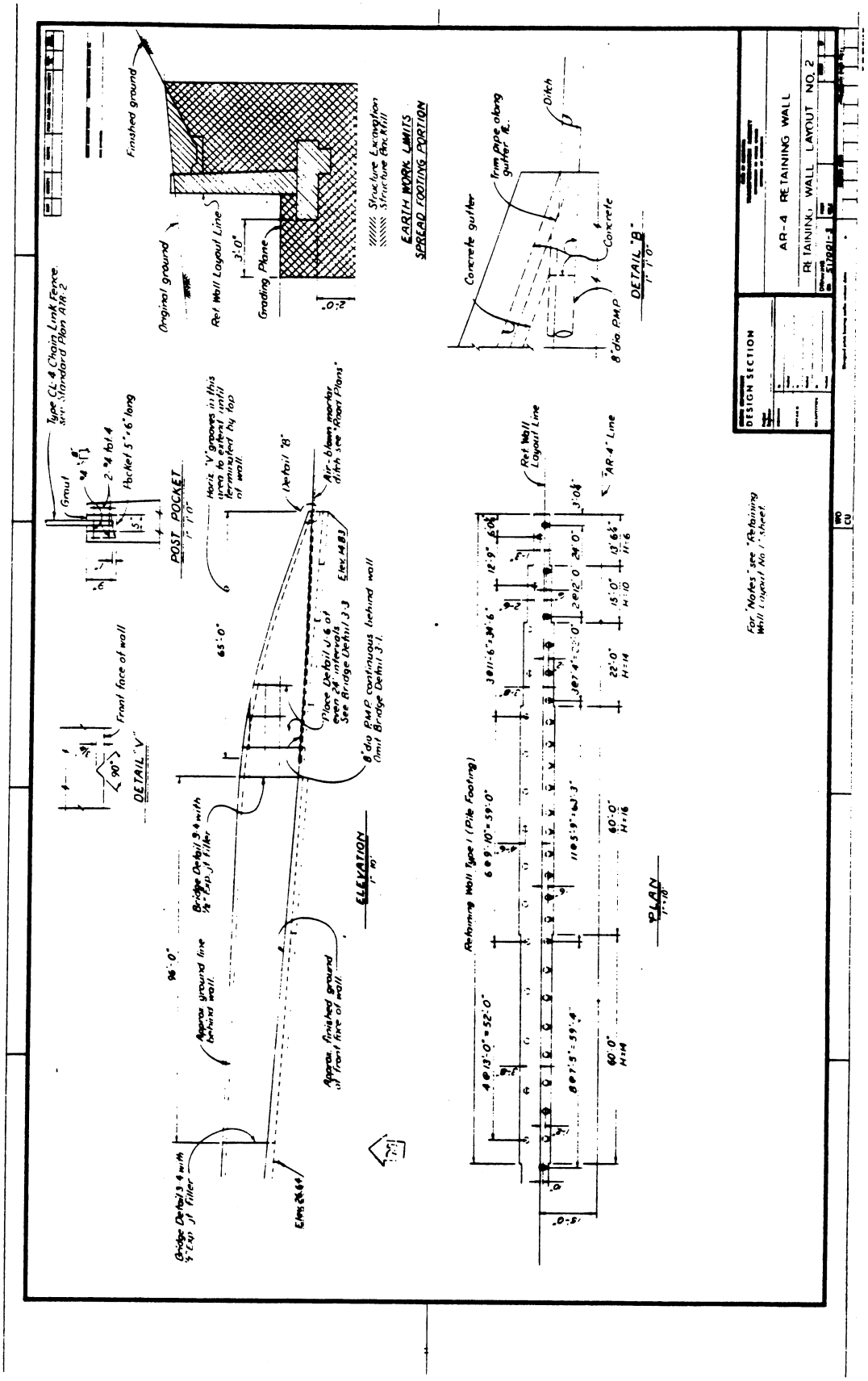


**DETAILS SHOWN ARE FOR EXAMPLE ONLY**
**NOT TO BE USED FOR DESIGN PURPOSES**