**State of California** **Business, Transportation and Housing Agency**

# Memorandum

To: ALL FALSEWORK MANUAL HOLDERS

Date: November 2, 2001

File: Falsework Manual

From: DEPARTMENT OF TRANSPORTATION
DIVISION OF ENGINEERING SERVICES
OFFICES OF STRUCTURE CONSTRUCTION

Subject: Falsework Manual Revision No. 32

Attached are revisions to Chapter 5 and two falsework memorandums for inclusion into your falsework manual.

The revisions entail changes to Chapter 5, “Falsework Stability”, by replacing Section 5-1.07, “Double Cap Systems” with Section 5-1.07, “Multiple & Built up Cap Systems”. This revision limits the height to width ratio to 2:1 of sill and cap beam assemblies in both directions (transverse and longitudinal), thus enhancing stability.

Falsework Memo 10, “Falsework Welding”, provides guidelines for classification and certification of falsework welded members.

Falsework Memo 11, “Cap Beam Center Loading Strips”, increases the allowable compressive stress for timber strips/shims from 450 psi (3.1 MPa) to 900 psi (6.2MPa).

Please remove and recycle pages 5-13 through 5-14 and the “Index to Appendix C – Falsework Memos" dated 09/99.

Please insert the attached revised table of contents and Chapter 5 pages (5-13 through 5-16 Rev. 07/01), Index to Appendix C – Falsework Memos (Rev. 07/01), Falsework Memo 10 (Rev. 07/01), Falsework Memo 11 (Rev. 07/01), and the title sheet for Revision 32 (07/01).

DOLORES M. VALLS
Deputy Division Chief
Offices of Structure Construction

Attachments

State of California | Business, Transportation and Housing Agency

# Memorandum

To: ALL FALSEWORK MANUAL HOLDERS

Date: September 21, 2001

File: Falsework Manual

From: **DEPARTMENT OF TRANSPORTATION**
**DIVISION OF ENGINEERING SERVICES**
**OFFICE OF STRUCTURE CONSTRUCTION**

Subject: Falsework Manual Revision No. 31

Attached is the revised Falsework Memorandum C-3.

The revised memorandum eliminates the last paragraph, which forbade erection and removal of falsework over or adjacent to roadways or railroads which are open to traffic.

The intent of the original memorandum was to provide more clear definitions of what activities are to be included in the erection and removal of falsework. It was not meant to be more restrictive than the contract special provisions by prohibiting all work adjacent to traffic.

Please insert the attached revised Falsework Memo 3 (Rev. 09/01), the Index to Appendix C – Falsework Memos (Rev. 09/01), and the Title Sheet for Revision 31 (09/01).

DOLORES M. VALLS, Deputy Division Chief
Offices of Structure Construction

Attachments

C: File

DMV/ct

**STATE OF CALIFORNIA.**

**DEPARTMENT OF TRANSPORTATION**

# FALSEWORK MANUAL

**ISSUED BY**
**OFFICES OF STRUCTURE CONSTRUCTION**

Copies of this manual may be obtained from:

Offices of Structure Construction
Attention: Manual Coordinator
Phone (916) 227-7777
FAX (916) 227-8179

**JANUARY 1988**

Revision 32
11/01

CONTENTS

## CHAPTER 1. INTRODUCTION


1- 1.01 Purpose and Scope ..... 1-1
.02 Statement of Department Policy ..... 1-1
.03 Policy and Procedural Changes ..... 1-2
.04 Specification Reference ..... 1-3
.05 Definitions ..... 1-3
.06 System Types ..... 1-4
.07 Contractual Relationships ..... 1-5
.08 Cal-OSHA Falsework Requirements ..... 1-6


## CHAPTER 2. REVIEW AND APPROVAL OF FALSEWORK DRAWINGS


2- 1.01 Introduction ..... 2-1
.02 General Information ..... 2-1
.03 Design Calculations ..... 2-2
.04 Initial Review ..... 2-3
.05 Determining Review Durations ..... 2-5
.06 Falsework Drawing Approval ..... 2-8
.07 Cal-OSHA Requirements ..... 2-11
.08 Design Revisions to Approved Drawings ..... 2-11
.09 Chronological Record of Falsework Review ..... 2-12


## CHAPTER 3. DESIGN CONSIDERATIONS


3-1 **Loads**
.01 Dead Loads ..... 3-1
.02 Live Loads ..... 3-1
.03 Minimum Vertical Load ..... 3-2
.04 Loaded Zone for Deck Overhangs ..... 3-3
.05 Vertical Design Load at Traffic Openings ..... 3-4
.06 Horizontal Loads ..... 3-4
.06 Wind Loads ..... 3-5
.07 Effect of Shielding on Wind Impact Area ..... 3-14
3-2 **Deflection and Camber** ..... 3-15
.01 Beam Deflection ..... 3-15
.02 Camber ..... 3-17
.03 Horizontal Deflection ..... 3-19
3-3 **Miscellaneous Considerations** ..... 3-20
.01 Beam Continuity ..... 3-20
.02 Construction Sequence ..... 3-20
.03 Friction ..... 3-21
.04 Prestressing Forces ..... 3-22
.05 Long-term Superstructure Deflection ..... 3-23
.06 Falsework at Deck Overhangs ..... 3-24
.07 Concrete Decks on Steel Girders ..... 3-25


## CHAPTER 4. STRESS ANALYSIS


4-1 **Introduction** ..... 4-1
.01 Policy Statement ..... 4-1

.02 General Design Assumptions ..... 4-1
4-2 **Timber Members** ..... 4-2
.01 Member Size ..... 4-2
.02 Allowable Stresses and Load Duration ..... 4-2
.03 Timber Beams ..... 4-2
.04 Timber Posts ..... 4-10
4-3 **Timber Fasteners** ..... 4-12
.01 Introduction ..... 4-12
.02 Connector Design Values ..... 4-12
.03 Nails and Spikes ..... 4-12
.04 Bolted Connections ..... 4-15
.05 Lag Screw Connections ..... 4-19
.06 Drift Pin and Drift Bolt Connections ..... 4-20
.07 Adjustment for Duration of Load ..... 4-22
4-4 **Steel Members** ..... 4-23
.01 Allowable Stresses ..... 4-23
.02 Bending Stresses ..... 4-24
.03 Bi-Axial Bending ..... 4-24
.04 Flange Buckling ..... 4-27
.05 Beam Shear ..... 4-29
.06 Web Crippling ..... 4-30
.07 Steel Posts and Columns ..... 4-30
.08 Steel Bracing ..... 4-31
.09 Miscellaneous Steel Components ..... 4-31
4-5 **Cable Bracing Systems** ..... 4-32
.01 Introduction ..... 4-32
.02 Required Information for all Cable Systems ..... 4-32
.03 Manufacturer's Technical Data ..... 4-33
.04 Cable Connector Design ..... 4-35
.05 Cable Elongation ..... 4-35
.06 Review Criteria for External Cable Bracing Systems ..... 4-35
.07 Review Criteria for Internal Cable Bracing Systems ..... 4-38
.08 Cable Load Tests ..... 4-49
.09 Cable Anchor Systems ..... 4-49
.10 Splicing Cable ..... 4-50
4-6 **Manufactured Assemblies** ..... 4-51
.01 General Information ..... 4-51
.02 Load Tests ..... 4-52
.03 Beam Hangers ..... 4-52
.04 Deck Overhang Brackets ..... 4-53
.05 Steel Joist Assemblies ..... 4-53


## CHAPTER 5. FALSEWORK STABILITY


5- 1.01 Introduction ..... 5-1
.02 Internal Stability ..... 5-3
.03 Diagonal Bracing ..... 5-3
.04 Longitudinal Stability ..... 5-9
.05 Overturning ..... 5-10
.06 Pony Bent Systems ..... 5-13

CONTENTS


.07 Multiple & Built up Cap Systems ..... 5-13
.08 Combining Stresses ..... 5-16

**CHAPTER 6. STEEL SHORING SYSTEMS**

6- 1.01 Introduction ..... 6-1
.02 Safe Working Loads ..... 6-1
.03 Pipe-Frame Shoring Systems ..... 6-2
.04 Intermediate Strength Shoring ..... 6-6
.05 Heavy-Duty Shoring Systems ..... 6-8

**CHAPTER 7. FALSEWORK FOUNDATIONS**

7-1 **Introduction** ..... 7-1
7-2 **Timber Pads** ..... 7-1
.01 General ..... 7-1
.02 Definitions ..... 7-3
.03 Analysis of Continuous Pad Systems ..... 7-3
.04 Analysis of Individual Falsework Pads ..... 7-16
.05 Joints and Joint Location in Continuous Pads ..... 7-18
.06 Corbels ..... 7-20
7-3 **Pile Foundations** ..... 7-23
.01 General ..... 7-23
.02 Capacity of Timber Piles in Pile Bents ..... 7-23
.03 Analysis of Timber Pile Bents ..... 7-29
.04 Field Evaluation of Pile Capacity ..... 7-43
.05 Capacity of Steel Piles and Steel Pile Bents ..... 7-52

**CHAPTER 8. TRAFFIC OPENINGS**

8- 1.01 Introduction ..... 8-1
.02 Horizontal and Vertical Clearances ..... 8-1
.03 Requirements at Traffic Openings ..... 8-2
.04 Additional Requirements at Railroad Openings ..... 8-6

**CHAPTER 9. INSPECTION**

9- 1.01 Introduction ..... 9-1
.02 Falsework Erection and Removal Plans ..... 9-1
.03 Foundation Pads and Piles ..... 9-1
.04 Timber Construction ..... 9-5
.05 Structural Steel ..... 9-9
.06 Manufactured Assemblies ..... 9-9
.07 Metal Shoring Systems ..... 9-10
.08 Miscellaneous Field Welding ..... 9-12
.09 Powder Driven Nail Anchorages ..... 9-12
.10 Cable Bracing Systems ..... 9-13
.11 Traffic Openings ..... 9-15
.12 Field Changes ..... 9-17
.13 Cal-OSHA Requirements ..... 9-18
.14 Inspection During Concrete Placement ..... 9-19
.15 Inspection After Concrete Placement ..... 9-20

.16 Falsework Removal ..... 9-21

**INDEX**

**APPENDIX**

A. Wood Characteristics .....
B. Soil Load Tests .....
C. Falsework Memos .....
D. Example Problems .....
E. Timber Fasteners .....

# CALIFORNIA

# FALSEWORK MANUAL

# CHAPTER 1. INTRODUCTION

## 1-1.01 Purpose and Scope

The *California Falsework Manual* has been issued by the Department of Transportation's Division of Structures to-fill a long-recognized need for a comprehensive design and construction manual devoted exclusively to bridge falsework. Its intended purpose is to provide administrative and technical direction to the Division's field engineers who are in responsible charge of bridge construction on State highway projects. While emphasis is placed on contract administration, it is important to note that materials, design considerations, stress analysis, review criteria, construction and construction inspection are covered as well.

Proper use of the *California Falsework Manual* requires a thorough understanding of the principles of civil engineering design, and familiarity with the falsework specifications as well.

## 1-1.02 Statement of Department Policy

The *California Falsework Manual* sets forth Department of Transportation policy for administration of specifications governing the design and construction of falsework for structures on State highway projects. The manual also includes guidelines, instructions and procedures which are to be followed on all projects to ensure uniform and impartial contract administration. Project personnel who are responsible for review and approval of falsework drawings and/or inspection of falsework construction are expected to become thoroughly familiar -with the contents of this manual.

When referring to the *California Falsework Manual,* field personnel should keep in mind that it is not, and it is not intended to be, a contract document. Should there be any conflict between the manual and any contract provision, the contract provision must be followed. This is not to say, however, that the manual has no contractual significance. On the contrary, Section 4-1.01 of the Standard Specifications provides that in the absence of specific direction or complete detail, "... only the best general practice is to prevail...". Contractually, then, with respect to design and construction of bridge falsework, the *California Falsework Manual* represents the Department's opinion as to what constitutes "best general practice" within the meaning of this term as it is used in the Standard Specifications.

Analytical procedure and review criteria used by the Division of Structures to evaluate the adequacy of falsework designs, as set forth in this manual, are based on more than two decades of

continuing study by the Division's engineering staff of the behavior of individual components of the falsework system, and of the behavior of the system as a whole, as the design loads are applied. These studies, which covered a wide range of typical load combinations, led to the development of simplified methods which may be used to evaluate the adequacy of complex falsework configurations. Where appropriate, the Division has adopted a simplified approach to standardize and facilitate the review process.

For elements of the falsework system that are mathematically indeterminate, the Division's simplified methods and procedures provide reasonably close correlation when compared to results obtained by conventional, rigorous analysis; consequently, they will be applicable to the type of falsework encountered on typical bridge projects in California. Occasionally, however, a situation will arise where analysis using a simplified approach may be inappropriate. In such situations, the design review should include a rigorous analysis to ensure stability of the falsework system. (A falsework system composed of custom-built, multi-tiered structural steel frames or towers is an example of a design where a rigorous analysis would be warranted.) The bridge engineer responsible for review of the falsework design will be expected to recognize such situations and to consult with the Office of Structure Construction headquarters office for the procedure to be followed.

If the contractor's design of an indeterminate element of the falsework system is based on a rigorous analysis as shown by the design calculations, and if the contractor so requests in writing, system adequacy will be evaluated by the Division's STRUDL program, or by a similar rigorous method of frame analysis.

## l-1.03 Policy and Procedural Changes

Information and instructions in the *California Falsework Manual* are current as of the date of publication. It is expected, however, that changes in policy guidelines and/or procedural direction will from time to time occur. Such changes will be implemented by issuing dated revisions to the manual text. Revisions will be accompanied by instruction or explanation when appropriate.

To expedite implementation, changes may be effected on an interim basis by issuing Falsework Memos, which will then supersede conflicting instructions in the manual text. Falsework Memos are to be filed in Appendix C until manual revisions are issued. To ensure that current policy is readily apparent, interim changes should be noted in the text by an appropriate marginal reference.

## l-l.04 Specification Reference

Whenever the term "Standard Specifications", specifications" or "falsework specifications" appears in this manual, the term is used in reference to the current edition of the Standard Specifications issued by the California Department of Transportation.

## l-l.05 Definitions

Falsework may be defined in general terms as a temporary framework on which a main or permanent work is supported during its construction.

Although temporary supports are occasionally required during the construction of steel structures, the unqualified term "falsework" is universally associated with the construction of cast-in-place concrete structures, particularly bridge structures. In this type of construction, falsework provides a stable platform upon which the forms may be built, and furnishes support for the bridge superstructure until the members being constructed have attained sufficient strength to support themselves. [1]

As commonly used in the construction industry, the term "falsework" refers to the temporary supporting system between the ground and the bridge soffit. Temporary features of construction above the soffit are generally considered to be forms rather than falsework. However, the Standard Specifications provide that the support systems for form panels supporting deck slabs and overhangs on girder bridges will be considered to be falsework members and designed as such. Accordingly, on State highway projects all load carrying members, regardless of their location within the supporting system, must meet the design criteria included in the falsework specifications. [2]

---

[1] As a point of interest, note that while falsework is used in conjunction with both bridge and building construction, the temporary supports used in building work are commonly referred to as "shores" and the support system as "shoring".

[2] When considering the purpose of the temporary features of construction above the bridge soffit, it is important to recognize the distinction between "formwork" and "falsework" as these terms are used in the construction industry. Forms, which are used to retain plastic concrete in its desired shape until it has hardened, are designed to resist the fluid pressure of plastic concrete, plus the additional equivalent fluid pressure generated by vibration. Forms, because they do not carry the dead load of the concrete, may be removed as soon as

## 1-1.06 System Types

Typically, bridge falsework may be divided into two general types, briefly described as follows:

(1) Conventional systems in which the various components (beams, posts, caps, bracing, etc,) are each erected individually to form the completed system.

(2) Proprietary shoring systems in which metal components are assembled into modular units that may be stacked, one above the other, to form a series of towers which comprise the vertical load-carrying members of the system.

## l-1.06A Conventional Systems

A typical conventional falsework system will consist of timber posts and caps, timber diagonal bracing, either timber beams or steel stringers, and timber joists. Foundation support is usually provided by timber pads set on the surface of the ground, although poor soil conditions may dictate the use of concrete footings or driven piles to ensure an adequate foundation.

Steel frame bents are sometimes used to carry the heavier loads associated with falsework bents adjacent to traffic openings or other locations where relatively long falsework spans are used. Steel bents are usually supported by concrete footings, or by steel sill beams which distribute the loads to heavy timber pads or cribbing.

Of comparatively recent development is pipe column falsework in which the vertical components consist of Welded steel pipe. Typically, pipe diameters range from 12 to 18 inches, or more, depending on the load to be carried. The pipe columns are framed with steel caps at the top and bottom, and internally braced with small diameter steel rods or reinforcing steel bars. All frame connections are welded.

---

the concrete hardens. Falsework members do carry the dead load of the concrete, and therefore they must remain in place until the concrete becomes self-supporting.

Plywood panels on the underside of a concrete slab serve both as a form and as a falsework member. For design, however, such panels are considered to be forms because they must meet the requirements in Section 51-l.O5, Forms, of the Standard Specifications.

## 1-1.06B Proprietary Shoring Systems

A11 proprietary shoring systems consist of metal components that may be assembled into modular units and erected in place. When erected, the shoring consists of a series of internally braced towers which support the main horizontal load-carrying members and carry the vertical loads to the ground.

Depending on capacity, the various shoring systems marketed commercially may be described as pipe-frame shoring, heavy duty shoring, or intermediate strength shoring. Pipe-frame shoring systems have a rated capacity of 11,000 lbs per leg, or less for some systems, whereas a properly designed and constructed heavy duty shoring system will be capable of carrying up to 100,000 lbs per tower leg. Intermediate strength shoring has a capacity of up to 25,000 lbs per tower leg.

Typically, timber caps and stringers will be used with pipe-frame and intermediate strength systems, and foundation support will be provided by timber pads. The higher capacity of the heavy duty systems will permit longer falsework spans, so that rolled beams or welded plate girders are normally used for the main horizontal load carrying members. In most cases, the larger loads associated with heavy duty shoring will require reinforced concrete footings or pile foundations to ensure adequate support.

## 1-l.07 Contractual Relationships

In accordance with contract requirements, the contractor is responsible for the design and construction of bridge false-work. Specifically, the Standard Specifications include the following provisions:

From Section 5-1.02, Plans and Working Drawings:

> "Working drawings for...falseworke...shall be submitted when required by the specifications or ordered by the Engineer. Such working drawings shall be subject to approval insofar as the details affect the character of the finished work and for compliance with design requirements..., but details of design will be left to the Contractor who shall be responsible for the successful completion of the work."

From Section 51-1.06, Falsework:

> "The Contractor shall be responsible for designing and constructing safe and adequate falsework which provides the necessary rigidity, supports the loads imposed, and produces in the finished structure the lines and grades shown on the plans,"

Since the contractor is responsible for falsework design and construction, he determines the type of falsework to be used and the construction and removal methods to be employed, subject only to compliance with the design criteria and the conditions of use found in the specifications. It is the engineer's responsibility, however, to ensure by his review that the falsework design meets all contract requirements.

From the foregoing, it is evident that the basic relationship between the contractor and the engineer with respect to falsework is the same as the relationship in other aspects of contract work, with one significant difference. The engineer, when satisfied that all contract requirements have been met, must approve the contractor% design and construction details as shown on working drawings that have been prepared and submitted specifically for review and approval by the engineer pursuant to applicable contract provisions.

Under Department of Transportation policy, review and approval of the contractor's falsework design is a Division of Structures responsibility. This responsibility is delegated to the Office of Structure Construction's structure representative at the project site. It is the structure representative, therefore, who must determine whether the proposed falsework design, as shown on the falsework drawings, meets contract requirements.

When reviewing falsework drawings, keep in mind that approval of the drawings constitutes acceptance by the State of the falsework design and such construction details as may be shown on the drawings, and an acknowledgment that the design does in fact meet contract requirements.

Responsibility for review and approval of falsework drawings is not a matter to be taken lightly. Falsework drawings shall not be approved until, and unless, the structure representative is satisfied that the proposed falsework design complies in all respects with all applicable contract requirements.

## 1-1.08 Cal-OSHA Falsework Requirements

The *Construction Safety Orders* issued by the California Department of Occupational Safety and Health (Cal-OSHA) include various provisions which apply to the design and construction of falsework or vertical shoring, including falsework or shoring for structures being constructed on State highway projects.

Applicable *Construction Safety Orders,* and the engineer's responsibility with respect to those orders as they affect approval of falsework drawings and falsework inspection, is discussed in Chapters 2 and 9, respectively.

# CHAPTER 2. REVIEW OF FALSEWORK DRAWINGS

## 2-1.01 Introduction

This chapter covers Division of Structures policy with respect to the falsework drawing review process. Subsequent chapters cover specific review guidelines, procedures and explanations where necessary to ensure uniform and impartial contract administration.

As noted in Chapter 1, review and approval of the contractor's falsework design is delegated to the Office of Structure Construction's structure representative in responsible charge of structure work at the project site. And while the actual design check may be performed by any qualified member of his staff, the structure representative is expected to give his personal attention to the review while it is in progress and to give his concurrence before the drawings are approved.

## 2-l.02 General Information

The contract requirement for submission of falsework drawings. should be discussed at the preconstruction conference, with emphasis on the need for a complete submittal before the review period begins. (See Section 2-1.04 for information that must be shown in a "complete" submittal.) The contractor should be reminded that, except for foundation pads and piles, falsework construction may not begin until the drawings are approved.

When a manufactured product or assembly will be used, the specifications require the contractor to furnish catalog data or other descriptive literature showing the manufacturer's recommended safe load-carrying capacity, conditions of use, and other information affecting the ability of the particular product or device to carry the design load. However, such supplemental design information must be furnished only if it is requested by the engineer. To avoid delaying the review while waiting for supplemental information, the contractor should be informed promptly in any case where required technical data is not furnished when the drawings are submitted for review.

It is not necessary for the contractor to submit all drawings that will be required eventually before any are reviewed. The drawings may be submitted in increments, and the increments may be approved, provided they are well-defined units of the work, such as individual bridges or portions of bridges that are independent of other portions.

If falsework plans for different units of the work (two or more individual bridges, for example) are submitted at the same time, or if an additional plan is submitted for review before review of a previously submitted plan has been completed, the contractor must designate the order or sequence in which the

plans are to be reviewed. The time allowed for the review of any plan in the sequence is not less than the contract time allowed for review of that plan, plus two weeks for each higher priority plan still under review.

On most contracts the engineer will be allowed three weeks for review of the falsework drawings. For complicated structures or if railroad approval will be required, the contract special provisions will establish a longer review period.

Omissions, inconsistencies and design deficiencies discovered during any review should be noted in red on the drawings, and one set of drawings returned to the contractor for correction and resubmission.

When falsework drawings are returned for correction, they are to be accompanied by a letter giving the reason or reasons the drawings are not acceptable, The letter should list the specific deficiencies found (i.e., 6x16 stringers overstressed in bending) but elaboration is unnecessary. Do not suggest any corrective measures; listing the deficiencies is sufficient.

## 2-1.03 Design Calculations

In addition to falsework drawings, the contractor must furnish a copy of the design calculations.

The specifications require the design calculations to show the stresses and deflections in load-supporting members. In the specification context, the term "load-supporting members" will be construed as meaning the design-controlling members. It is not the specification's intent to require the contractor to calculate the stress in, and the deflection of, each and every member in the falsework system.

Keep in mind that the design calculations furnished by the contractor are for information only; they are not for review and approval. Accordingly, any design or construction details which may be shown in the form of sketches on calculation sheetsmust be shown on the falsework drawings as well; otherwise the drawings will not be complete. Note that as a matter of Division policy, falsework drawings are not to be approved in any case where it is necessary to refer to calculation sheets for information needed to complete the design review, or where information shown only on the calculation sheets will be needed for construction.

In most cases it is unnecessary to refer to the contractor's calculations during the design review. However, in the event a falsework member is overstressed or is otherwise inadequate in some respect, reference to the calculations may reveal the reason for the design deficiency.

## 2-1.04 Initial Review

Immediately upon receipt of the first submittal of any set of falsework drawings, the engineer will make an Initial review of the documents received. The purpose of the initial review is to ascertain whether the drawings and any required supporting data are "complete" within the meaning of this term as it is used in the Standard Specifications.

Determining whether a particular submittal is complete, or is not complete, involves a certain degree of subjectivity, and the engineer will be expected to exercise judgment and common sense when making this determination. The basic requisite is that the drawings contain enough information to enable the engineer to verify that the design meets contract requirements. This is accomplished by making a stress analysis; therefore, if there isn't enough information or detail to make a stress analysis, the drawings are not complete.

While Division policy requires a "complete" falsework submittal to contain enough information to enable the-engineer to verify the adequacy of the falsework design, this does not mean that every design detail must be shown on a given set of falsework drawings. A reference to a standard plan submitted previously, or to a previously submitted drawing for another structure in the same contract having a similar detail, is acceptable. [1]

Regardless of other considerations, for administrative purposes the drawings will be viewed as incomplete (and will be returned to the contractor for completion and resubmission) if <u>any</u> of the following information is omitted:

> The drawings must show the size of all load-supporting members, including soffit joists, and all transverse and longitudinal bracing, including connections. For box girder structures, the drawings must show the falsework members supporting sloping exterior girders, deck overhangs and any attached construction, walkways.
>
> All design-controlling dimensions must be shown, including beam length and spacing; post location and spacing; overall height of falsework bents; vertical distance between connectors in diagonal bracing; and similar dimensions that are critical to the design.

---

[1] Standard plans and Standard details are to be reviewed and approved in the same manner as other falsework drawings, even though they may have been approved on a previous contract. Once approved, however, they need not be again reviewed when included withfalsework drawing submittals for subsequent structures in the same contract.

- The location and method by which the falsework will be adjusted to final grade must be shown.
- Unless a concrete placing schedule is shown on the plans, the falsework drawings must include a superstructure placing diagram showing the proposed concrete placing sequence and/or the direction of pour, whichever one is applicable, and the location of all construction joints. (For relatively simple structures, this requirement may be satisfied by a note on the drawings.)
- The drawings must show all openings through the falsework. Horizontal and vertical clearances must be clearly shown, and must meet contract requirements. The location of temporary K-rail must be shown.
- If the falsework will incorporate a proprietary shoring system, the trade name and rating (i.e., WACO 100 kip steel shoring) must be shown.
- If the height of the falsework at any location, measured from the ground line to the bridge soffit, exceeds 14 feet, or if any falsework span exceeds 16 feet, or if openings are provided for vehicular, pedestrian or railroad traffic, each sheet of the drawings must be signed by a civil engineer registered in California. (This includes standard plans and standard details.)
- The drawings must be accompanied by the contractor's design calculations; and any other supplemental data required by the falsework design that is needed for a stress analysis. [2]

Division policy requires the initial review to be completed within two working days following receipt of a given set of falsework drawings. The purpose of this policy is to assure a timely notice to the contractor in the event the drawings are not complete. Since the only purpose of the initial review is to discover omissions that would prevent completion of a

---

[2] The specifications require the contractor to submit design data for any manufactured assembly to be used in the falsework, but only if requested by the engineer. To assure a complete falsework design submittal and thus avoid any unnecessary delay in the review process when a manufactured product or device will be used, the specification requirement should be discussed with the contractor at the preconstruction conference. The contractor should be informed that if proprietary products of any kind are to be used, the required technical data must accompany the falsework drawings when they are first submitted for review.

subsequent design check, neither calculations nor an evaluation of design details is required; thus completion within 2 working days is a realistic time frame.

When reviewing falsework drawings pursuant to instructions in this section, keep in mind that submission of complete drawings along with all required supporting data is a specific contract requirement that controls the start of the falsework review period. However, while the time period for review of falsework drawings does not begin until a complete submittal is received, it is often possible to review portions of the design which do not depend on the missing information. Accordingly, it is Division policy to expedite the approval process by reviewing as much of the design as is possible while waiting for the resubmittal of falsework drawings that have been returned for completion following the initial review.

The initial review may reveal omissions which are not of such serious consequence as to delay the design check, but which if not corrected will delay approval. For example, the omission of items such as the falsework erection and removal plan; pad and/or pile design information; the falsework lighting plan, if one is required; and similar information that will eventually be required prior to approval should be brought to the contractor's attention at the earliest convenient time.

## 2-1.05 Determining Review Durations

As previously noted, the time allowed by the contract for the engineer's falsework design review is three weeks, or more for complicated structures or when railroad approval is required.

Regardless of the time allowed, the review period begins when a complete set of drawings is received from the contractor, and ends when the drawings are approved. However, the total elapsed time between submission of complete drawings and final approval may exceed the time properly attributable to the engineer's review. This is the case because the engineer is not responsible for time taken by the contractor to make necessary revisions or corrections to the drawings.

Determining the actual duration of the engineer's review can be critical from an administrative standpoint, since the contract provides for additional time and compensation to offset any time lost due to delays attributable to the engineer's failure to complete the falsework review within the time allowed.[3]

---

[3] In the event the contractor is delayed, the additional time and compensation due are determined in accordance with the Right of Way Delay provisions of the contract.

## 2-1.05A The Falsework Review Clock

Conceptually, the duration of the engineer's review may be visualized as the time elapsed on an imaginary falsework review clock. The clock is turned on when falsework drawings are received and remains. on while the engineer is reviewing the drawings. The clock is turned off, however, whenever the drawings are being revised or corrected by the contractor. The duration of the engineer's review is numerically equal to the number of calendar days the review clock is turned on during the overall falsework review period.

Although the review period begins when a complete falsework submittal is received, the first day of the review period is the day following the day on which the submittal is received, and the final day (for a 3-week review period) is the 21st day from the day the submittal is-received, excluding any days on which the falsework review clock has been turned off.

Since the specifications contemplate a review period measured in weeks, the number of working days within the review period is irrelevant. Therefore, when calculating incremental review durations within the overall review period, the elapsed time between falsework review events is the number of calendar days between the events, including weekends and holidays, converted to calendar weeks.

Since the review clock is turned on whenever falsework drawings are received, it is essential to determine whether the drawings are complete when first submitted. This is the case because the time allowed for the engineer's review begins when the submittal is complete, but not before. Accordingly, Division policy requires an initial review immediately upon receipt of the first submittal. The time attributable to the initial review depends on whether the first submittal is found to be complete or not complete, and if not complete, on the actual time taken for the review, as explained below.

### Case I. First Submittal is Complete

The review clock is turned on when the drawings are received, and since the submittal is complete as shown by the initial review, the clock remains on until the drawings are returned to the contractor for correction and resubmission, or until the review has been completed and the drawings approved.

### Case II. First Submittal is not Complete

Although the review clock is turned on when the drawings are received, it is turned off and reset to zero following the initial review, provided the contractor is notified and the drawings returned for completion and resubmission within the

two working day period allowed for the initial review by Division of Structures policy. If, however, the initial review requires more than two days and/or the contractor is not informed that the drawings are incomplete within the two day initial review window, all additional time (beyond two working days) remains on the review clock when it is reset following the return of the drawings to the contractor.

For resubmittals following the initial review, for both the Case I and Case II situations, the review clock is turned on when the revised drawings are received and remains on while the engineer is reviewing the design for compliance with contract requirements. The clock is turned off when the contractor is informed that further changes are required, and it remains off while the contractor is making the required corrections and/or revisions. The clock is turned off for the final time when the contractor is informed that the drawings are approved. The duration of the engineer's review is the total time shown on the falsework review clock.

2-1.05B Review Time Adjustment for Design Revisions

Both the specifications and the review procedures previously discussed contemplate a scenario in which a complete falsework submittal will be acceptable as submitted, or will require only minor corrections prior to approval. While this is typically the case, situations occasionally arise wherein the contractor, following the return of drawings for correction or revision, will submit a new design rather than a corrected or revised original design. In such cases Division policy provides for an increased review time to compensate for the time previously taken to review portions of the falsework design that have been replaced or significantly altered by the new design.

Whether a resubmittal is a new design or merely a revised original design is not always clear. As a guide, Division policy provides that a resubmittal will be viewed as a new design only if the change is such as to require another design check to verify system adequacy.

For example, increasing the size or number of timber stringers to correct a bending moment overstress is not a new design, since the adequacy of the revision often can be verified by inspection, and calculations, when necessary, are elementary. However, if the resubmittal shows a longer span with steel stringers, a complete design check would be required. (That is, for the steel design it is necessary to recalculate loads, determine section properties, and verify beam adequacy by comparing actual and allowable stresses for the steel members.) The time needed to perform this second design check is added to the time originally allowed for the engineer's review to obtain an adjusted review time.

## 2-1.06 Falsework Drawing Approval

Falsework Memo No. 1 includes a comprehensive listing of items that should be considered and/or investigated before falsework drawings are approved. Prior to the approval of any falsework drawings, Falsework Memo No. 1 should be reviewed to ensure that no requirement has been overlooked.

### 2-1.06A Procedure when Railroad Company is not Involved

Except for falsework that is adjacent to or over a railroad, the falsework drawings may be approved when the structure representative is satisfied that the falsework design meets all contract requirements.

Approval will be noted on each sheet of the falsework drawings by means of an Office of Structure Construction "Plan Approval" stamp. Each sheet must be signed by the structure representative or by the member of his staff who actually reviewed the design and who is a registered civil engineer.

One set of the approved drawings will be returned to the contractor, with a cover letter signed by the structure representative.[4]

The approval letter must include the following paragraphs:

> "The falsework drawings dated _____(date)_____ for _____(Name of Structure)_____ have been reviewed and are approved to the extent provided in Section 5-1.02 of the Standard Specifications."
>
> "Your attention is directed to your responsibilities pursuant to Sections 5-1.02, 7-1.09 and 51-1.06 of the Standard Specifications, and to applicable requirements of the Construction Safety Orders."
>
> "You are reminded that falsework construction must conform to the approved drawings, that the materials used must be of the quality necessary to sustain the stresses required by the falsework design, and that workmanship must be of such quality that the falsework will support the loads imposed without excessive settlement or joint take-up beyond that shown on the falsework drawings."

---

[4] Under the specifications, falsework construction (except for foundation pads and piles) for any unit of the falsework may not begin until the drawings for that unit have been approved. From a contractual standpoint, the approval letter is the contractor's authorization to begin falsework construction.

Concurrently with approval, one copy of the approved drawings and one copy of the engineer's calculations are to be submitted to the Sacramento Office of Structure Construction, along with a copy of the approval letter sent to the contractor.

One set of the approved drawings and the original calculation sheets are retained in the job files.

2-1.06B Procedure when Railroad Company Approval is Required

For structures adjacent to or over railroad facilities, approval of the falsework drawings is contingent on the drawings being satisfactory to the railroad company involved.

When railroad company approval is required, the falsework drawings are first reviewed for adequacy and compliance with contract requirements in the same manner as all other falsework drawings. When the review has been completed and the structure representative is satisfied that all contract requirements have been met, the drawings are to be sent to the Sacramento Office of Structure Construction for subsequent transmittal to the railroad company, in accordance with the procedure described in this section.

The Standard Specifications include special requirements for all falsework over or adjacent to railroads. When railroads are involved, the contract special provisions will include additional requirements that are project specific. Section 10 of the special provisions will include requirements for falsework openings and collision posts, and other specific railroad requirements may be included in this section as well. The number of sets of falsework drawings to be submitted by the contractor is found in the "Railroad Relations and Insurance" section of the special provisions, along with any specific requirements for protection of railroad tracks and/or property.

Standard Specification and special provision requirements for falsework adjacent to and over railroads should be reviewed before the drawings are sent to the Sacramento office to ensure that all applicable requirements have been met.

All falsework opening clearances must be clearly shown. Note that the vertical clearance is measured from the top of the track rail and horizontal clearances are measured from the centerline of the tracks.

In most cases, only the falsework drawings for the structure span over the railroad tracks will require review and approval by the railroad company. However, when the structure is high enough for adjacent structure span falsework to fall on railroad property, the falsework drawings for those adjacent spans must be submitted as well.

Falsework drawings that do not require review and approval by the railroad company may be approved as soon as the design check is completed. For such drawings, approval shall be in accordance with the instructions in Section 2-1.06A.

The number of copies of drawings and other data required depends on the type of structure and the railroad company involved. For the Southern Pacific, Western Pacific, and Atchison, Topeka & Santa Fe railroads, submit the following: [5]

- Four copies of the falsework drawings. (Five copies for underpass structures and the Atchison, Topeka & Santa Fe Railway.)
- Two copies of manufacturer's catalog data for manufactured assemblies. (Three copies for underpass structures and the Atchison, Topeka & Santa Fe Railway.)
- Two copies of the contractor's calculations. (Three copies for underpass structures and the Atchison, Topeka & Santa Fe Railway.)
- Two copies of the Structure Representative's calculations. (Three copies for underpass structures and the Atchison, Topeka & Santa Fe Railway.)

Note that one copy of each of the above listed items is for use by the falsework section in the Sacramento Office, and the remaining copies are forwarded to the railroad company. In the event that railroad company personnel at the job site need copies of falsework drawings or other data, they are to obtain them from their headquarters, not from the State or contractor.

Drawings and other data submitted to the Sacramento office are to be accompanied by a letter of transmittal from the structure representative listing the items submitted. The letter shall state that the drawings have been reviewed and are considered satisfactory:

Drawings and other data will be reviewed in the Sacramento Office of Structure Construction, and if complete and otherwise satisfactory, will be forwarded to the railroad company for review and approval. (Submittals which are incomplete will be returned to the structure representative.)

---

[5] For other railroads, including light rail facilities consult the falsework review section in the Sacramento Office of Structure Construction for the number of copies required.

When the Sacramento Office of Structure Construction is informed by the railroad company that the drawings are satisfactory, the structure representative will be notified by telephone, with a confirming letter following. Upon notification, the structure representative may approve the drawings. Approval should follow the procedure discussed in preceding Section 2-1.06A.

It is emphasized that falsework drawings for structures over railroad facilities are not to be approved until the structure representative has been notified by the Sacramento Office of Structure Construction that the design is acceptable to the railroad company.

## 2-1.07 Cal-OSHA Requirements

Article 1503 of the *Construction Safety Orders* requires the contractor to obtain a permit to construct or dismantle falsework or shoring that is more than three stories high, or the equivalent height in feet. Article 1503 further defines a "story" as 12 feet; consequently, this requirement will apply to all falsework which exceeds 36 feet, measured from the top of the falsework foundation to the bridge soffit.

Obtaining the permit required pursuant to Article 503 is the contractor's responsibility. Upon application, a permit will be issued for a specific project; however, as a business practice many bridge contractors obtain a blanket permit to cover all of their work. Blanket permits must be renewed annually.

Although the structure representative has neither the authority nor the duty to enforce Article 1503, as a matter of policy the fact that the contractor has a valid permit will be verified before the falsework drawings are approved in any case where a permit is required; i.e., when the falsework is more than 36 feet high. The date of verification should be noted in the falsework log and job diary.

## 2-1.08 Design Revisions to Approved Drawings

The specifications contemplate the possibility of the contractor submitting a revised design after the original design has been reviewed and approved. For this occurrence, the engineer is allowed sufficient time for a review, but not more time than was originally allowed.

For administrative purposes, any revision to an approved falsework drawing will be viewed as a new submittal, and as such will be reviewed pursuant to applicable specification requirements and the review policy and procedures previously discussed herein. Division policy provides that the engineer's review be performed expeditiously.

## 2-1.09 Chronological Record of Falsework Review

A chronological record, or log, showing all pertinent dates relating to the submission, review and approval of falsework drawings is required for each structure in the contract

Normally, the first entry will be the date the drawings are first received. If, however, topics having significance with respect to the falsework design are discussed prior to the first submittal, the discussion should be noted and the log started.

The falsework log will include the date the falsework drawings were first received; the date(s) the contractor is notified of required revisions, including the reason(s) the review could not continue and/or why the drawings had to be returned; the date(s) revised drawings were received, the dates and subject matter covered in conversations and letters relating to the falsework review, the date of approval, the date the drawings were forwarded to headquarters, and any other pertinent dates affecting the review.

Keep the falsework review clock in mind when making entries in the falsework log. When entries are properly made, the time taken for the engineer's review should be readily apparent.

Make a notation in the log of the date that falsework for a given structure becomes the controlling operation on the project, and the date on which it is no longer controlling. Be specific as to the activity that is actually controlling, such as preparation of drawings by the contractor, review by the State or railroad company, falsework erection, etc. [6]

Entries in a chronological log are not in lieu of similar information shown in construction diaries. The diary entry should give detailed information, whereas the chronological log should list only the dates, identification of subject, and the people involved.

---

[6] In some situations, particularly where a CPM analysis has not been made, it may be difficult to ascertain whether falsework is, or is not, on the critical path. If the actual controlling operation is **not** evident but it appears that the falsework review **(or construction)** may affect other aspects of the project, the Structure Representative should note this fact in the log.

# CHAPTER 3. DESIGN CONSIDERATIONS

## Section 3-1 Loads

As provided in the specifications, the falsework system must be designed to resist the sum of all dead and live vertical loads, plus an assumed horizontal load.

### 3-l.01 Dead Loads

Except as provided in the following paragraph, the dead load on a member is weight of the concrete, forms and reinforcing steel it is required to support, plus its own weight. The minimum value given in the specifications for the weight of concrete, forms and reinforcing steel is 160 pounds per cubic foot for normal concrete and 130 pounds per cubic foot for lightweight concrete.

When calculating actual beam deflection for comparison to the maximum deflection allowed by the specifications, the dead load on the member is the weight of the concrete only (see Section 3-2.01). For the dead load calculation, it is customary to use 150 pcf for normal concrete. For light weight concrete, use the actual value as determined from unit-weight tests.

Falsework must be designed to support the dead load weight of the entire superstructure cross section, excluding the weight of the railings, with the single exception of girder stems, and connected bottom slabs when deck concrete is placed more than five days after girder-stem concrete. In such cases the girder stem may be considered as self-supporting between falsework posts when the top slab is placed, provided the distance between falsework posts does not exceed four times the depth of the portion of the girder placed in the first pour.

The purpose of this exception is to reduce the design dead load on joists and stringers for box-girder structures in those cases where the girder stem (and the soffit slab as well where the soffit slab is loaded by the deck falsework) has gained sufficient strength to carry the weight of the top slab.

### 3-1.02 Live Loads

The design live load consists of a uniform load of 20 pounds per square foot applied over the total area supported; plus the actual weight of construction equipment, with the weight applied as a concentrated load at each point of contact; plus a uniform load of 75 pounds per linear foot applied at the outside edge of deck overhangs.

Judgment is required when investigating the effect of live loads caused by construction equipment, since instances will

occur where equipment live load and concrete dead load are not applied at the same time. For example, when concrete placing equipment (such as a belt-spreader) is used in advance of the concrete front, there are two loading conditions. One loading condition will be uniform live load plus equipment live load plus an allowance for weight of forms and reinforcing steel, while the other will be uniform live load plus the normal dead load. Both conditions should be investigated.

For application of the uniform 20 psf live load; the total area supported includes the area of construction walkways that extend beyond the outside edge of the deck or the deck overhang, However, the design load for all falsework supporting the walkway is the minimum vertical load, or 100 psf, as discussed in the following section.

The uniform load of 75 pounds per linear foot is applied only at the edge of deck overhangs. It is not applied along the edge of slab bridges or box girder bridges without overhangs, or at the edge of an interior deck construction joint.

3-1.03 Minimum Vertica1 Load

Regardless of the actual load imposed, the minimum vertical load (dead load plus live load) to be used in the design of any falsework member may not be less than 100 pounds per square foot, measured over the total area supported by that member. For application of this requirement, the term "total area supported" means, and includes, any area that is subjected to a dead load or a live load during any construction sequence.

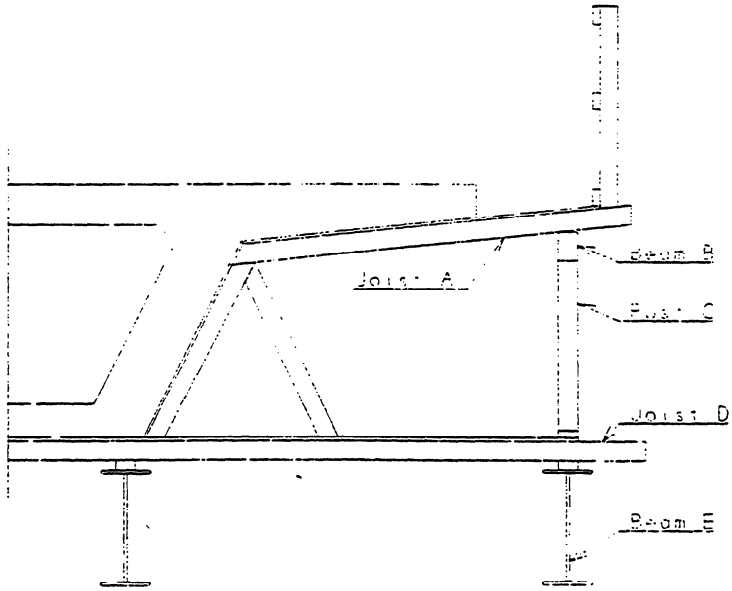


**FIGURE 3-l**

## DESIGN CONSIDERATIONS

In the past, some confusion has occurred as to the design load for falsework supporting a construction walkway extending beyond the edge of deck or deck overhang. Refer to Figure 3-1, and note that Joist A, Beam B, Post C, Joist D and Beam E, and falsework members supporting Beam E, all see the construction walkway area as part of the "total area supported".

Figure 3-2 is a schematic portrayal of the various loads and load combinations specified for design of the deck overhang falsework. For the construction walkway itself (the walkwav planks or plywood) the design load is 20 psf. However, for the falsework members supporting the walkway, the design load is the minimum vertical load, or 100 pounds per square foot.

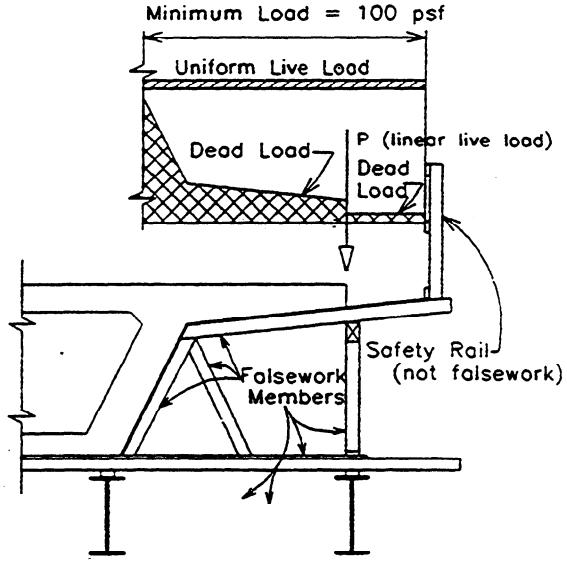


Dead Load - Actual weight of PCC, rebar, forms, falsework.

Live loads - Actual equipment load, uniform load of 20 psf.

P = 75 pounds/foot applied at edge of deck overhang.

Uniform live load is applied over the total area supported.

Minimum total design load for any falsework member is not less than 100 psf for live load plus dead

**FIGURE 3-2**

### 3-1.04 Loaded Zone for Deck Overhangs

Experience has shown that concentrated live loads, such as the load from finishing bridges and other miscellaneous equipment and materials not otherwise considered, can and do occur at or near the edge of a bridge deck during the concrete placing and finishing operations. In the case of deck overhangs, these loads may significantly increase the stresses in the overhang falsework support system. To account for the accumulated effect of such loads, the specifications include the requirement for a live load of 75 pounds per linear foot applied along the outside edge of all deck overhangs.

While the specified linear live load is a necessary design consideration for deck overhang falsework, its application to

falsework components below the overhang support system will in the case of long falsework spans impose a design load that is unlikely to occur in actual. practice. To prevent an unrealistic loading condition for falsework members below the level of the bridge soffit, it is Division of Structures policy to limit the distance over which the specified 75-pound linear live load is applied to a loaded zone 20 feet in length measured along the edge of the overhang. The loaded zone will be viewed as a moving load positioned to produce maximum stresses in the falsework member under consideration.

The loaded zone concept for application of the 75-pound linear live load will be used when checking stresses in stringers, caps, posts and other members of the falsework system below the level of the bridge soffit in all cases where the falsework spans exceed 20 feet in length.

The loaded zone concept will also apply to the minimum vertical load (100 psf) on a construction walkway adjacent to the edge of the deck overhang. That is, when investigating stresses produced by the construction walkway load in falsework members below the level of the-bridge soffit in any case where the falsework spans exceed 20 feet, the 100 psf minimum load will be applied within, but not beyond, the 20-foot loaded zone as discussed above.

### 3-1.05 Vertical Design Load at Traffic Openings

The vertical design load for certain falsework members at traffic openings is increased to 150 percent of the load calculated in the usual manner. The application of this requirement is discussed in Chapter 8.

### 3-1.06 Horizontal Loads

The specifications require the "falsework bracing system" to be capable of resisting an assumed horizontal load applied in any direction.

As a design load, the assumed horizontal load is the sum of any actual loads due to equipment, construction sequence or other causes, plus an allowance for wind. In no case, however, may the horizontal design load be less than two percent of the total supported dead load at the location under consideration.

Keep in mind that the specified horizontal design load is an "assumed" load. Since it is an assumed load, it will not be equal, necessarily, to any actual horizontal load that may occur. Nevertheless, the falsework bracing system must be designed to resist the horizontal design load with the falsework in either the loaded or unloaded condition.

The requirement that falsework bracing must be designed to resist a horizontal load is included in the specifications to ensure both transverse and longitudinal stability. Falsework system stability is discussed in Chapter 5.

3-1.06 Wind Loads

The minimum horizontal design load (two percent of the total supported dead load) will govern the design for typica1 highway separation structures and otherstructures where the falsework height is less than about 30 feet. Depending on falsework configuration, wind may be a design consideration when height of falsework exceeds 30 feet, and wind loads will govern most designs where falsework height exceeds about 40 feet.

Determining the actual force exerted by wind on bridge falsework is a highly indeterminate problem due to the number of variable factors involved. These variable factors include the true wind velocity, the downwind width of the falsework system, the downwind distance between adjacent members, the drag or shape factor for the various members, the "solidity ratio" or percentage of solid-surface in a given gross frontal area, and the height of the falsework above the ground.

Although it would be theoretically possible, for a given falsework system, to establish values for each of these variables, such a procedure would be cumbersome and time-consuming at best, and (because of the subjective judgments involved) would not necessarily result in a more accurate answer than may be obtained by a simplified method. This, together with the need to ensure statewide uniformity in the wind load calculations, has led to the development of a specification which recognizes the effect of the more influential variables and assigns a coefficient to cover the others.

For the wind load calculation, the specification considers two general falsework types: (1) heavy duty steel shoring and steel pipe column falsework where the vertical members have a load carrying capacity exceeding 30 kips per tower leg or pipe column, and (2) all other falsework, including falsework supported by heavy duty shoring or pipe columns.

For heavy duty shoring and pipe column falsework systems; the wind load is the product of the wind impact area, a shape factor, and an appropriate wind pressure value. The wind impact area is defined as the total projected area of all elements in a tower face or falsework bent normal to the direction of the wind. The shape factor is included to account for the effect of wind drag forces on the members and, for heavy duty shoring, the effect of wind acting on members in the other three tower faces.

For all other falsework, including falsework supported by heavy duty shoring and pipe columns, the wind load is the product of the wind impact area and an appropriate wind pressure value. The wind impact area is the gross projected area of the falsework and any unrestrained portion of the permanent structure, excluding the area between falsework bents or towers where diagonal bracing is not used. In the specification context, the term "diagonal bracing" does not include flexible bracing systems.[1]

For all falsework types, the wind pressure value is a function of the height of the falsework. Wind pressure values, for each height zone, are tabulated in the specifications.

Except for falsework on driven pile bents, the height to be used in the wind impact area calculation is the vertical distance between the top of the component of the falsework system about which overturning rotation can occur and the bridge soffit. In the case of pile bents, judgment is required to determine the lower limit of the wind impact-area. If the piles are cut off and capped near the ground, the lower limit will be the plane at the pile cut-off elevation. If, however, the piles extend an appreciable distance above the ground, or above the water surface for structures over water, the entire height of the falsework (measured from ground or water surface to bridge soffit) should be used.

When calculating wind impact areas, keep in mind that formwork extending above the bridge soffit is not part of the wind impact area.[2]

Wind pressure height zones are always measured from the ground up regardless of falsework configuration.

Example problems illustrating the procedure to be followed when calculating the wind load on various falsework systems are included in the appendix.

3-1.06A Calculation of Wind Loads on Heavy Duty Steel Shoring

For wind acting on heavy duty steel shoring, the critical loading condition will occur when the wind force is applied at right angles to the tower faces. The effect of wind acting in

---

[1] Flexible bracing includes cable, reinforcing steel bars, steel rods and bars, and similar members that do not resist compression.

[2] The specifications exclude formwork from the wind impact area under the assumption that when subjected to the design wind load, the forms would be blown off the falsework.

other directions need not be considered except in the case of temporary bracing installed during falsework erection and/or removal.

The horizontal design load produced by wind forces acting on heavy duty steel shoring is determined as fo11ows:

1 . From the tabulation in the Standard Specifications, select the wind pressure for each height zone.

2. Multiply the selected wind pressure by the specified shape factor (2.2) to obtain the design wind pressure.

3. Calculate the total wind force per tower (WF) for each height zone by multiplying the design wind pressure by the total projected area of all the elements in the tower face normal to the applied wind.

   The following tabulation shows the projected area, in square feet per foot of tower height, for heavy duty steel shoring systems approved for use on State projects. In the tabulation; the projected area of the members has been adjusted to account for the effect of brackets, gussets and other minor components within the tower cross-section.

| No Legs per face | WACO Shoring ($ft^2/ft$) | PAFCO Shoring ($ft^2/ft$) | WADCO Shoring ($ft^2/ft$) | HI-CAP Shoring ($ft^2/ft$) |
|---|---|---|---|---|
| 2 | 2.00 | 1.75 | 1.93 | 1.64 |
| 3 | 2.50 | 2.25 | 2.43 | --- |
| 4 | 3.00 | 2.75 | 2.93 | --- |

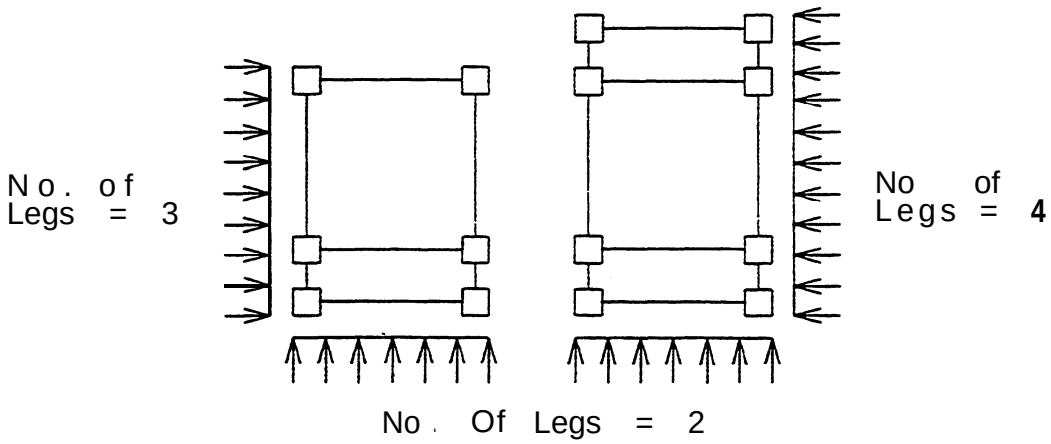

4. For each height zone, calculate the overturning moment by multiplying the wind force (from step 3) by the distance from the base of the tower (top of the tower footing) to the center of pressure. Add the overturning moments for each height zone to obtain the total overturning moment.

5. Divide the total overturning moment determined in step 4 by the vertical distance between the tower base and a horizontal plane at the top of the highest falsework tower. The value thus obtained is the horizontal design load for wind (DWL) acting on the tower.

3-l.06A(l) Analysis in the Transverse Direction

Calculation of the horizontal designload for wind acting in the transverse direction is shown schematically in Figure 3-3.

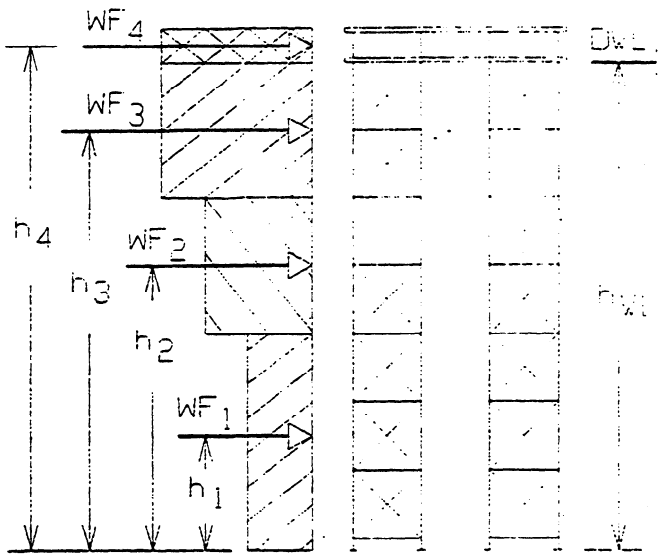


**Wind Load per Tower**

1. **Shoring**

   $OTM_1 = WF_1h_1 + WF_2h_2 + WF_3h_3$

2. **Supported falsework**

   $OTM_2 = 0.5\,WF_4h_4$

3. **Resultant wind load**

   $$DWL = \frac{OTM_1 + OTM_2}{h_{WL}}$$

**WF = wind force acting on falsework in a given height zone.**

**DWL = design wind load.**

**FIGURE 3-3**

Except as provided in the following paragraph, adjacent towers in the same falsework bent must each resist the design wind load because the upwind tower does not shield the downwind tower to any significant degree. This premise will be considered valid regardless of the distance between the towers, and will include those configurations where the space between abutting legs of adjacent towers is minimal. See Figure 3-4.

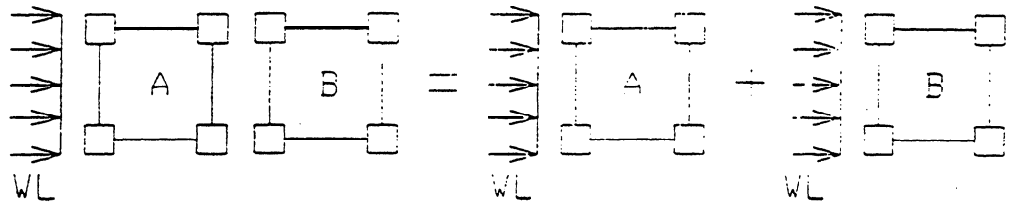


**FIGURE 3-4**

If the abutting legs of adjacent towers are connected, the total wind load for the two towers will be assumed as 1.5 times the design wind load acting on the upwind tower face. For analysis of the system, distribute one-half of the total wind load (or 75 percent of the design wind load) to each tower. See Figure 3-5.

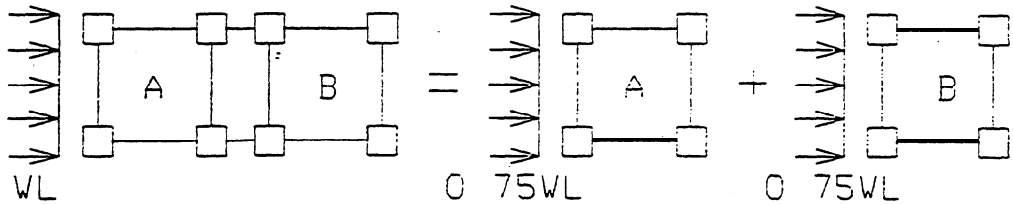


**FIGURE 3 - 5**

In addition to resisting the horizontal load produced by wind acting on the shoring towers, the falsework bracing system must resist the additional horizontal load produced by wind acting on elements of the falsework system (caps, stringers, joists, etc.) supported by the shoring. The design wind load on supported falsework is calculated by the wind impact area method. (See Section 3-1.06C.)

Refer to Figure 3-6 and note that for wind acting parallel to the falsework bent, the wind load on the supported falsework will be distributed to the individual towers in accordance with the following assumptions:

- For bents with two towers, one-half of the design wind load will be distributed to each tower.
- For bents with three towers or more, one-half of the design wind load will be distributed to the upwind tower and the remainder distributed equally to all other towers in the bent

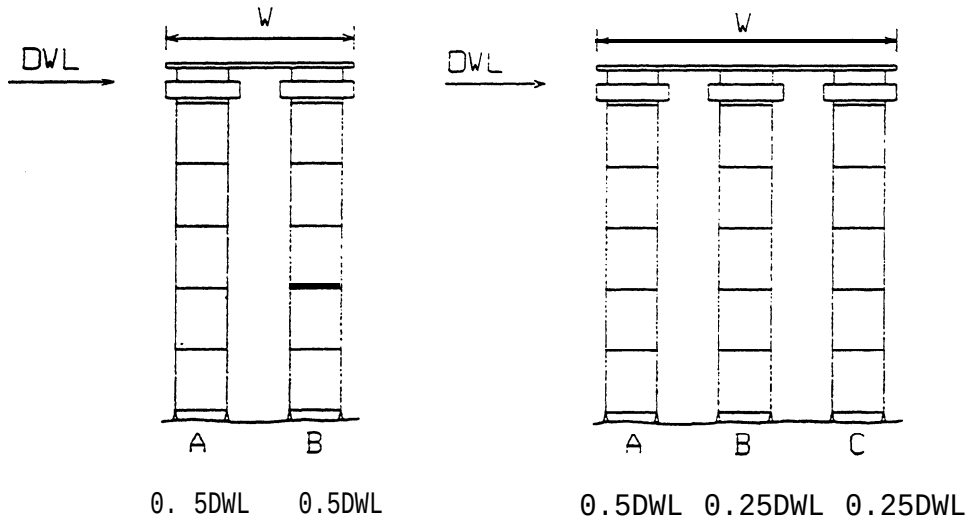


DWL = Design wind load on supported falsework system.

W = Downwind width of supported falsework system, determined in accordance with the procedure explained in Section 3-1.06C.

**FIGURE 3-6**

## 3-1.06A(2) Analysis in the Longitudinal Direction

For wind acting in the longitudinal direction or normal to the bent, the overturning moment calculation (wind load per tower) will be as depicted in Figure 3-3 for wind acting on the falsework towers. However, distribution of the load produced by wind acting on the supported falsework depends on the way the system is designed to resist longitudinal forces. Accordingly, when evaluating system adequacy, the load due to wind acting on the supported falsework should be distributed to the system in accordance with the discussion in Section 5-1.04, Longitudinal Stability.

## 3-1.06B Calculation of Wind Load on Pipe Column Falsework

For a pipe column falsework bent, the horizontal design load due to wind acting on the bent is the sum of the wind loads on the individual pipe columns in the bent. While this is obvious for wind acting normal to the bent, it is also the case

for wind acting in the transverse direction (parallel to the bent centerline) because, typically, the columns are so widely spaced that shielding will not occur.

For adjacent columns where the downwind column is within the shielded zone, the applied wind force on the downwind column will decrease, but this will be offset by higher drag forces produced by increased wind turbulence. For this reason, it is Division of Structures policy to ignore any theoretical decrease in wind. load attributable to downwind shielding of adjacent pipe columns.

The design wind load is determined as follows:

1. Select the wind pressure for each height zone from the tabulation in the Standard Specifications.

2. For each height zone, multiply the selected wind pressure by the specified shape factor (1.0) to obtain the design wind pressure.

3. For each height zone, calculate the total projected area of the falsework bent. The total projected area is the sum of the projected areas (height of pipe column times diameter) of the individual pipe columns in the bent.

4. For each height zone, multiply the design wind pressure (from step 2) by the total projected area (from step 3) to obtain the wind force.

5. For each height zone, calculate the overturning moment by multiplying the wind force (from step 4) by the vertical distance between the point at the base of the pipe column frame about which overturning rotation will occur and the center of pressure.

---

[3]See Section 3-1.07 for a discussion of shielding of downwind falsework members.

[4]The specified shape factor for pipe column falsework (1.0) has been adjusted upward from the true shape factor of 0.8 for circular sections to account for the effect of bracing and connections which are ignored in the calculations. This procedure is reasonable for typical pipe column bents where the bracing consists of small diameter steel rods or reinforcing steel, cable, or small structural shapes. However, in the event larger bracing elements are used, the projected area of the bracing components must be included in the total projected area of the falsework calculated in step 3. For this calculation, use a shape factor of 1.3.

Judgment is required when determining the point about which overturning rotation will occur. Typically, a pipe column bent is a rigid unit consisting of top and bottom cap beams, two or more columns, and internal diagonal bracing, all supported by a foundation system. Where adjustment is provide at the top of the bent, the lower cap or sill beam will be supported by corbels which distribute the load to the foundation. Where adjustment is provided at the bottom, wedges will be located between the sill beam (lower cap) and the corbels. In either typical case when overturning forces are applied, the bent will tend to rotate about a point at the bottom of the lower cap beam. For other configurations, the point of rotation should be determined as the lowest point in the system about which rotation can occur while the frame remains rigid.

6. Add the overturning moments for each height zone to obtain the total overturning moment.

7. Divide the total overturning moment by the vertical distance between the point of overturning rotation at the base of the frame (determined in step 5) and the top of the highest bent component. The value thus obtained is the horizontal design load for wind acting on the bent.

In addition to resisting the horizontal load produced by wind acting on the falsework members in the bent, the bracing must resist the additional load produced by wind acting on elements of the falsework system (stringers, joists, etc.) supported by the bent. The wind load on supported falsework is calculated by the wind-impact-area method discussed in the following section.

3-1.06C Calculation of Wind Loads by Wind-Impact-Area Method

Except for heavy duty steel shoring and pipe column falsework bents, the design wind load to be applied to all types of bridge falsework, including falsework supported by heavy duty shoring and pipe column bents, is the product of an appropriate wind pressure value and the wind impact area of the falsework system under consideration. This method of determining the design wind load is commonly referred to as the "wind-impact-area" method.

The design wind load is calculated as follows:

1. Determine the value for W, which is the downwind width of the falsework system, or that portion of the system under consideration, measured in the wind direction.

For falsework supported by heavy duty shoring or pipe column bents, W will be the distance between the exterior beams or stringers. For all other falsework, W is the width of that portion of the falsework which supports a continuous cap or is connected by uninterrupted diagonal bracing.

2. Calculate the value for drag coefficient Q. From the specifications, Q = 1.0 + 0-2W, but not more than 10.

3. Calculate the wind pressure value for each height zone, using the wind velocity coefficient for that height zone as listed in the specifications and the value for Q calculated in step 2 above.

4. Calculate the wind impact area. The wind impact area as defined in the specifications is the gross projected area of the falsework and any unrestrained element of the permanent structure, excluding the area between falsework bents where diagonal bracing is not used. (Keep in mind that the term "diagonal bracing" as used in the wind impact area definition does not include flexible bracing.)

5. Calculate the total wind force for each height zone by multiplying the calculated wind pressure value by the wind impact area for that height zone.

6. Calculate the overturning moment for each height zone by multiplying the wind force (from step 5) by its distance above the point at the base of the falsework about which overturning rotation will occur. For this calculation, the wind force will be assumed as acting at the centroid of the wind impact area for the height zone under consideration.

   When determining the point about which overturning rotation will occur, keep in mind that an overturning failure occurs when a rigid element of the system, such as a braced frame or tower, rotates about the lowest downwind point of frame or tower support. Depending on the manner in which post or leg loads are distributed to the foundation, the point of overturning rotation may be at the top of a corbel or other load distributing member rather than at the bottom of the falsework system as a whole.

7. Add the overturning moments for each height zone to obtain the total overturning moment.

8. Divide the total overturning moment by the distance from the point at the base of the falsework about which overturning rotation will occur (determined in step 6) to the

top of the falsework post. The value thus obtained is the horizontal design load for wind acting on the falsework system.

For evaluation of system adequacy, the wind force will be applied parallel to and perpendicular to the longitudinal axis of the falsework bent. The effect of wind acting in other directions need not be considered in the analysis.

For wind forces (or a wind force component) applied parallel to the axis of a falsework bent, the calculated design wind load for each width (W) must be resisted by bracing within that width.

For wind forces applied perpendicular to the bent, resistance to the design wind load should be evaluated in the same manner as resistance to other longitudinal forces.

3-1.03 Effect of Shieldins on Wind Impact Area

When investigating the effect of wind acting perpendicular to a falsework bent, consideration may be given to the shielding provided by solid obstructions. Solid obstructions such as' abutment fills and pier walls will shield downwind falsework members to some extent, and thus reduce the wind impact area. The degree of shielding actually provided is speculative, however, and not easily determined. To ensure uniformity, the assumptions discussed in the following paragraphs will be considered as Division of Structures policy.

As wind blows around the end of a solid obstruction, the area over which the wind pressure is effective will increase inward on a 2:l ratio (downwind distance to inward distance) as shown in Figure 3-7. Falsework bents within the shielded zone will be considered as totally sheltered from wind forces-

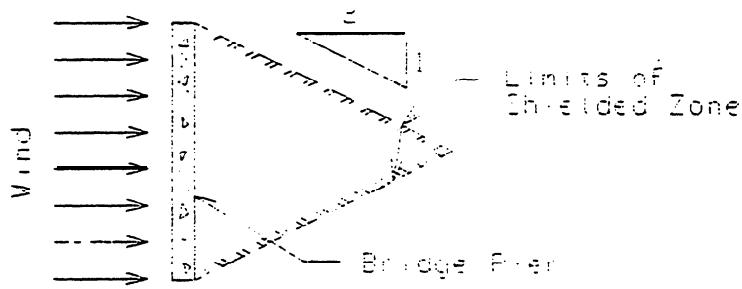


**Figure 3-7**

In the case of falsework bents which are partly shielded, the term "gross projected area of the falsework" will be interpreted as meaning the area of the bent that is outside the

shielded zone. (See Bent A in Figure 3-8.) When checking such bents for stability, the total wind load may be distributed uniformly along the entire length of the bent.

In the case of adjacent bents which are fastened together to form a single, longer bent, the wind load may be distributed into the adjacent bent provided the bents are rigidly connected. Such bents will be considered "rigidly connected" if in the engineer's judgment, the connection is capable of transferring the wind forces. (See Bent C in Figure 3-8.)

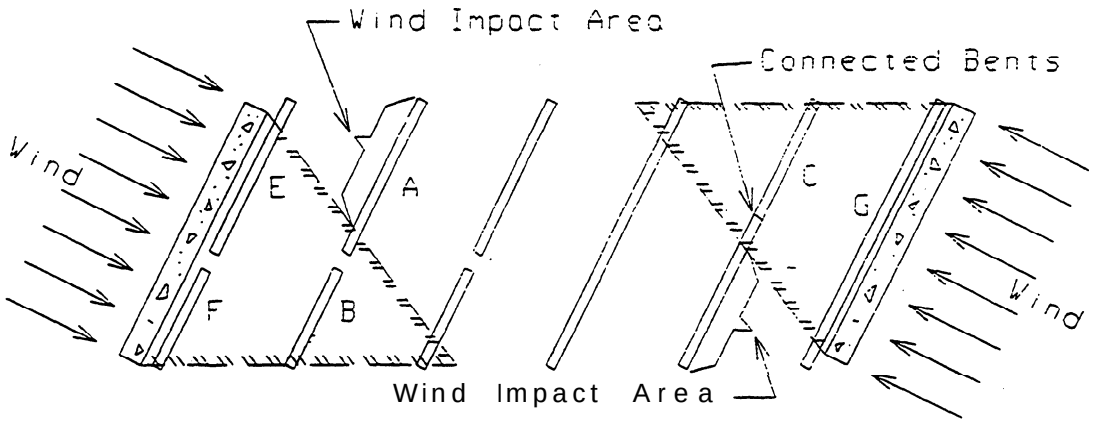


FIGURE 3-8

In the case of bents which are located immediately adjacent to a solid obstruction, the effect of wind may be neglected since the exposed area is relatively small. (Bents E, F and G.)

When investigating the effect of shielding, keep in mind that wind may blow from any direction. Falsework bents that are totally shielded from wind in one direction may be fully exposed when the wind forces are applied from the opposite direction.

## Section 3-2 Deflection and Camber

### 3-2.01 Beam Deflection

When reviewing falsework drawings, a distinction must be made between the maximum deflection allowed by the specifications and the actual deflection under a given loading condition.

The maximum allowable deflection is calculated using the weight of all concrete in the superstructure cross-section (as though the entire superstructure were placed in a single concrete pour) and is limited to l/240 of the span of the falsework

beam. This limiting value is included in the specifications to ensure a certain degree of rigidity in the falsework and thereby minimize distortion of the forms as concrete is placed.

Actual deflection is the deflection that occurs as the falsework beam is loaded. Calculating actual deflection is the engineer's responsibility, since it is used in determining the amount of falsework camber required. [5]

When calculating actual deflection, it is necessary to include the weight of forms and falsework supported by the beam, the weight of the beam itself, and the weight of the concrete. In addition, consideration must be given to such factors as the sequence of construction and the depth of the superstructure when two or more concrete pours are involved.

The specifications do not include a limiting value for live load deflection, since live loads are of a transient nature. However, when a bridge deck finishing machine is supported at the outer edge of a cantilevered deck overhang/particular care must be taken to prevent excessive deflection of the deck overhang support system. Unless special precautions are taken, the concentrated load due to the weight of the finishing machine may cause the deck overhang to deflect appreciably with respect to the remainder of the deck surface, and this will decrease bridge deck thickness. and reduce reinforcing steel cover, both of which are detrimental to the completed structure.

The applicable specification in this case is the general requirement that falsework must be designed and constructed so as to produce in the finished structure the lines and grades shown on the plans. To ensure compliance with this general requirement, it is Division of Structures policy to add the deflection due to the weight of a deck finishing machine to the deflection due to the weight of the concrete, and the sum of these two deflections should not be so large as to adversely affect the character of the finished work. Obviously, this will require engineering judgment. The important point is that the weight of the finishing machine be considered, and the total deflection limited to a realistic value.

---

[5] The specifications require the contractor's design calculations to show the "stresses and deflections in load supporting members." Said deflections, which may not exceed l/240 of the span, are calculated using the theoretical weight of the concrete supported by the member: There is no requirement that the contractor furnish "actual" deflections.

## DESIGN CONSIDERATIONS

### 3-2.01A Negative Deflection

Depending on the concrete placing sequence, negative (upward) deflection may occur where falsework beams are continuous over a long span and a relatively short adjacent span. This condition (negative deflection at the end support) is an indication of system instability and must be considered in the falsework design. If beam uplift cannot be prevented by loading the short span first, the end of the beam must be restrained or the span lengths changed. Division policy does not permit approval of any design where theoretical beam uplift will occur under any loading condition.

When falsework beams are considerably longer than the actual falsework span, the beam cantilever extending beyond the point of support will deflect upward as the main span is loaded. The falsework design must include provisions to accommodate this upward deflection. The usual method uses a filler strip (often called a "sleeper") on the main span only, which allows free movement of the beam cantilever.

### 3-2.02 Camber

The term "camber" is used to describe an adjustment to the profile of a load-supporting beam or stringer so the completed structure will have the lines and-grades shown on the plans. In theory, the camber adjustment consists of the sum of the following factors:

- Anticipated total deflection of the falsework beam under its own weight and the actual load imposed.
- Difference between beam profile and profile grade, also called vertical curve compensation,
- Difference between beam profile and ultimate super-structure deflection curve,
- Difference between beam profile and any permanent or residual camber to remain in the structure for its useful service life.

In structures with parabolic soffits, an additional adjustment may be required to account for the difference between beam profile and soffit curvature.

When falsework beams are relatively short, the theoretical adjustment due to vertical curve compensation, ultimate super-structure deflection and desired residual camber will be small and may be neglected. As falsework spans increase, these factors become increasingly significant and must be considered along with beam deflection.

More than any other single factor, the satisfactory appearance of a completed structure will depend on the accuracy of the camber used in the falsework construction. Obviously, good judgment will be required, particularly in determining the amount of camber to be used to compensate for anticipated dead load falsework deflection.

In general, the weight of the top slab of conventionally reinforced box girders should be omitted when calculating camber, since additional stringer deflection as the top slab is placed usually is insignificant. In the case of cast-in-place prestressed construction, falsework span length may be an important consideration. In such structures, judgment will be required as to the relative stiffness of the girder stems, and whether and how much they will resist additional deflection as the top slab is placed.

3-2.02A Camber Strips

When directed by the engineer, the contractor is required to furnish camber strips to compensate for beam deflection and to adjust the final profile for vertical curve, superstructure deflection and residual camber considerations. [6]

When to require camber strips is a matter of engineering judgment. As a general rule, camber strips-are not necessary unless the total camber adjustment exceeds about l/4-inch for beams supporting the edge of the girder soffit or deck overhang and/or about l/2-inch for beams at interior locations.

Because camber strips are an incidental part of the falsework system, their installation seldom receives more than cursory attention. Casual treatment of camber strip installation can result in an unforeseen, and undesirable, loading of the falsework beam. For example, a camber strip placed at a distance away from the centerline of a steel beam may induce torsional stresses that were not considered in the falsework design. Undesirable torsional stresses may be induced in beams supporting falsework for structures having steep cross slopes, even if the camber strip is properly placed along the beam centerline. For such structures, unless the vertical dimension of the camber strip includes an allowance to compensate for cross fall, the joist may bear on the edge of the beam flange rather than on the camber strip itself.

---

[6] Camber strips are lengths of wood cut to the shape of the camber curve and fastened to the top of the falsework beam or stringer. Typically, camber strips will be secured by nailing to the top of timber members, or by banding in the case of, steel members.

## DESIGN CONSIDERATIONS

To ensure proper design and installation, camber strips must conform to the following criteria:

- The width of the camber strip shall be not less than l-1/2 inches.
- Structure cross slope, allowable wood crushing, and joist deflection shall be considered when determining the height of the camber strip. The minimum height of the camber strip shall be such that the joists will not come into contact with any part of the falsework beam under any loading condition.
- Camber strips shall be centered along the longitudinal centerline of the falsework beam.
- Camber strips shall not extend onto the unloaded portion of a trailing beam cantilever.

The allowable stress for perpendicular-to-the-grain loading has been increased from 450 psi to 900 psi for camber strip bearing loads. When the applied load produces the maximum allowable stress, camber strip deformation due to crushing should not exceed about l/8-inch.

If the amount of camber is large, as: would be the case, for example, where a curved bridge soffit is supported by a long falsework beam, the camber strips should be braced or built up with wide material to avoid lateral instability. The use of laterally-unsupported tall, narrow camber strips should not be permitted.

### 3-2.03 Horizontal Deflection

Although the specifications do not include a limiting value for horizontal deflection, such deflection will be negligible in any falsework system where horizontal forces are resisted by bracing. Accordingly, horizontal deflection need not be considered in any case where the horizontal design load is resisted by a properly designed bracing system. This includes external bracing systems where the use of external bracing is necessary to prevent overturning.

Horizontal deflection will be a consideration when the horizontal design load is resisted by bending in a falsework member. This situation occurs when falsework is supported by driven piles that extend above-the ground surface. When evaluating the adequacy of pile bents, it is necessary to combine bending and vertical load stresses to obtain the actual stress.

The procedure for evaluating the adequacy of falsework pile bents is discussed in Chapter 7.

## Section 3-3 Miscellaneous Considerations

### Section 3-3.01 Beam Continuity

Because of the sequential, and sometimes unpredictable, manner in which falsework loads are applied, beam continuity is an uncertain design condition. To accommodate this uncertainty, it is Division of Structures policy to assume the continuous beam condition when continuity will act to increase loads or stresses, but not otherwise.

For example, the simple span condition will be assumed when calculating positive bending moments in joists, stringers, and similar continuous members; however, full continuity will be assumed when calculating negative bending moments in these same members, Assume full continuity when calculating the beam reaction on interior supports under continuous falsework members, but assume the simple span condition when calculating the reaction at the end support.

In a framed bent, continuity must be considered in any case where stringer loads are applied within the cap span rather than directly over the supporting post to ensure that allowable post loads are not exceeded.

Continuous caps are often supported by two or more towers in a heavy duty shoring system. If leg loads are unequal, the resulting differential leg shortening will cause a redistribution of beam reactions and a corresponding change in the magnitude and location of maximum cap bending stress.

When beams are continuous over two or more spans, beam uplift can occur in adjacent unloaded spans when concrete is placed in one span (see discussion in Section 3-2.01A, Negative Deflection).

The engineer will be expected to recognize these and other cases where the effect of beam continuity must be investigated to prevent the overstressing of any falsework member, or instability in the falsework system,

### 3-3.02 Construction Sequence

Unless a concrete placing sequence is shown on the plans, the falsework drawings must include a placing diagram showing the proposed placing sequence and the location of all construction joints. If a placing schedule or sequence is shown on the plans, no deviation is permitted and the falsework must be designed and constructed to accommodate the planned placing sequence.

## DESIGN CONSIDERATIONS

The location of transverse construction joints in the bridge superstructure is an important falsework design consideration. If a construction joint is located near the mid-point of a falsework beam, the initial concrete pour on one side of the joint will deflect the beam as the concrete dead load is applied. Later, as concrete is placed on the opposite side of the joint, additional beam deflection will occur. The additional beam deflection leaves the first concrete placed unsupported, and this can result in unanticipated detrimental stresses and even cracking in the permanent structure. To avoid this condition, transverse construction joints in the bridge superstructure should be designed and constructed in such a manner that subsequent pours will not produce additional stresses in the concrete already in place.

In many cases the exact location of a construction joint is not critical, and the joint can be moved a few feet in either direction to accommodate the falsework design. The important point, however, is that joint location with respect to falsework beam span be considered in the falsework design, thus avoiding a problem during construction.

When relatively long falsework spans are used to support T-beam structures, the added weight of the deck concrete, which often exceeds the weight of the stem, loads the stem as well as the falsework as the deck concrete is placed. This can produce stresses of considerable magnitude in the concrete and reinforcing steel in the girder stem.

To prevent overstressing of concrete and reinforcing steel in the girder stems, the specifications limit the length of falsework spans used to support T-beam structures to 14 feet plus 8.5 times the depth of the T-beam girder. In the specification context, the term "depth of the T-beam girder" means the distance between the top of the deck and the girder soffit.

### 3-3.03 Friction

Friction as a means of resisting-opposing horizontal forces is a very intangible factor; accordingly, the use of friction for this purpose should be considered with caution. When friction is used, the coefficient of friction should be assumed as 0.30 for all contact surfaces.

In general, friction may be considered as resisting the tendency of one member to slide over or across another member, provided frictional resistance is actually developed under the loading condition being investigated.

Do not consider frictional resistance in any case where the dead load is not applied uniformly through all stages of

construction, or where continuity would reduce the load acting on a support under a nonuniform loading condition.

Do not consider frictional resistance as contributing to the lateral stability of beams or stringers. If flange support is required, the method of support must be positive and independent of any theoretical frictional resistance.

Except as otherwise provided in the following paragraphs, do not consider friction as contributing to the resisting capacity of any connecting device unless the device is specifically designed and marketed as a friction-type connector.

Heavy-duty commercial and/or noncommercial C-clamps having a torque-tightening capacity of 90 foot-pounds or more may be used as connecting devices in accordance with the criteria included in Falsework Memo No. 5 in Appendix C. Note, however, that C-clamps are not to be used at any location where they are exposed to vandalism, such as at the bottom of posts or along sill beams.

Approved clamps may be used to resist horizontal forces up to 3000 pounds per clamp. For falsework adjacent to traffic, approved C-clamps by be used to resist the 500 pound force applied in any direction at the top of the falsework post as well, except that a clamp used for this purpose may not be used to resist any other force.

Approval of C-clamp installations shall conform to the following procedure:

The location of the clamps must be shown on the falsework drawings. All use restrictions in Falsework Memo No. 5 must be met.

- The falsework drawings must include a note requiring all clamps to be torqued to 90 foot-pounds minimum.
- For commercial clamps, the contractor must furnish a catalog cut or manufacturer's technical data sheet describing the clamp in sufficient detail to verify compliance with product criteria in Falsework Memo No. 4.
- For noncommercial clamps the falsework drawings must include a sketch showing the dimensions of the clamp. The clamp must comply with Falsework Memo No. 5.

## 3-3.04 Prestressing Forces

When cast-in-place prestressed structures are stressed, the initial stressing produces an upward deflection in the positive moment area, and the resulting redistribution of vertical

forces transfers the superstructure dead load from the falsework to the adjacent abutments and columns.

Dead load redistribution due to longitudinal prestressing will not be a falsework design consideration unless stage construction is required, as will be the case, for example, with continuous structures having hinged connections. For such structures, prestressing will reduce the dead load on the falsework near the center of the suspended span and increase the load on the falsework at the hinge. The forces involved in the dead load redistribution are of considerable magnitude, since up to 3/8 of the total suspended span dead load may be transferred to the falsework at the hinge. The load due to dead load transfer must be added to the dead load calculated in the usual manner to obtain the total dead load for the falsework design at the hinge support.

If the dead load hinge reaction (the load applied to the cantilever span by the supported span) is not shown on the contract plans, it may be obtained from the designer.

The effect of transverse prestressing is also a consideration. If the structure is designed to include transverse prestressing of decks or caps, the special provisions will include the stressing sequence, and the falsework must be designed to accommodate this sequence.

## 3-3.05 Long-term Superstructure Deflection

As discussed in the preceding section, falsework at a hinge must be designed to carry the additional load imposed when the super-structure is stressed. Depending on such factors as the length of time the falsework is to remain in place and the method and sequence of falsework removal, long term deflection of the bridge superstructure occurring subsequent to stressing may be a design consideration as well.

Long term superstructure deflection will begin as soon as the structure is stressed. As deflection occurs, a portion of the dead load initially transferred to the falsework at the hinge will be carried back to the falsework near the center of the span. The amount of dead load carry-back is a function of time and is not easy to predict, but this should not present a problem in most cases because the load carried back cannot exceed the load originally resisted by the falsework.

However, if falsework is removed in stages, field engineers should be aware that part of the redistributed load will be carried back with time, and that components of the falsework system remaining in place near the center of the span will be subjected to a gradually increasing load as superstructure deflection takes place. Accordingly, dead load carry-back may

be an important consideration when evaluating the adequacy of a given falsework removal sequence. (See also Section 9-l.14A, Stage Construction.)

3-3.067 Falsework at Deck Overhangs

For box girder structures with cantilevered deck overhangs, the normal two-stage construction sequence results in differential loading of the exterior and first interior falsework beams. The differential loading condition is exacerbated if the exterior girder is. also sloping outward at the top, as is usually the case. Depending on beam size and location, differential loading may result in differential beam deflection, causing the exterior girder stem to rotate. Girder rotation may occur during the girder stem pour or during the deck pour, or during both pours.

Refer to Figure 3-9, and note that during the girder stem pour, Beam B may deflect more than Beam A, in which case Point D will move upward relative to Beam B. This upward movement at Point D causes the girder-stem form to rotate inward. Inward rotation will affect alignment and grade at the top of the girder stem, but in most cases this is not serious since any required adjustment can be made before the deck pour. However, the effect of differential beam deflection during-the girder stem pour should be investigated as a precautionary measure to determine whether any adverse consequences will occur.

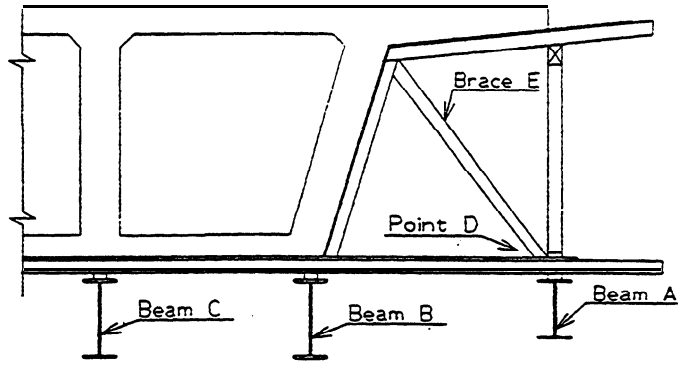


**FIGURE 3-9**

A more serious situation may develop during the deck pour where the weight of the deck overhang may cause Beam A to deflect more than Beam B, particularly if Beam A is a smaller member as is sometimes the case. This differential deflection causes a downward movement at Point D relative to Beam B, which pulls Brace E away from the girder stem form panel and leaves the sloping exterior girder unsupported. The weight of the unsupported exterior girder produces an outward rotational moment which, if not resisted, will cause unanticipated

torsional stresses in the concrete and reinforcing steel at the girder base. This condition (outward rotational moment) is exacerbated by the weight of the deck concrete on the inside of the exterior girder.

The load applied to the exterior and adjacent interior falsework beams during the deck pour should be investigated in all cases where the depth of a box girder structure having sloping exterior girders exceeds five feet. When the applied loads result in differential beam deflection of sufficient magnitude to cause the exterior girder support system to become dysfunctional, the falsework design must include a means to resist girder rotation. Division of Structures policy requires the method by which this is accomplished, such as tie-backs to the base of the adjacent interior girder, to be shown on the falsework drawings.

For various reasons, contractors occasionally follow a three-step construction sequence in which the soffit slab is placed independently of the girder stems. When the soffit slab is placed as a separate concrete pour, Beam C will deflect more than Beam B and there will be no appreciable deflection at Beam A. These differential beam deflections will result in an upward movement at Point D relative to Beam B. Additionally, joist continuity will tend to lift the soffit joist at Point D as concrete is placed. Upward movement at Point D resulting from these factors will rotate the girder form inward. If these movements are appreciable, it may be necessary to realign the form before placing stem concrete.

### 3-3.07 Concrete Decks on Steel Girders

Section 55-1.05 of the Standard Specifications includes special requirements for falsework supporting the concrete deck on steel girder bridges. These requirements are included to control the manner in which falsework loads are applied to the steel girder, and thus prevent undesirable distortion of the permanent structure.

Horizontal loads applied to the girder flanges by the falsework will produce a torsional moment in the girder. To prevent possible overstressing of the permanent diaphragm connections, the falsework design must include temporary struts and/or ties to resist the full torsional moment and to prevent appreciable relative vertical movement between the edge of deck form and the adjacent steel girder.

Additionally, the falsework must be so designed and constructed that any loads applied to the girder web will be applied within six inches of a flange or stiffener. The applied loads must be distributed so as to prevent local distortion of the web.

# CHAPTER 4. STRESS ANALYSIS

## Section 4-1 Introduction

### 4-1.01 Policy Statement

The design stresses and deflections set forth in the falsework specifications are the maximumstresses and deflections which may be allowed for a given loading condition. Loads are to be applied in accordance with the policy and procedures discussed in Chapter 3, Section 3-l. Individual members of the falsework system, as well as the system as a whole, must be capable of resisting the specified design loads without exceeding the allowable values.

In accordance with Division of Structures policy, falsework drawings are not to be approved in any case where the calculated stress or deflection in any falsework member exceeds the allowable stress or deflection for that falsework member.

### 4-l.02 General Design Assumptions

In general, stresses in load-carrying members of the falsework system may be determined by using the general formulas of civil engineering design applicable to statically determinate framed structures.

For those elements of the falsework system that are statically indeterminate, the Division of Structures has developed specific methods and procedures which are to be used when investigating system adequacy. These procedures, which are applicable to diagonal bracing, metal shoring systems, and pads and pile bents, are explained in Chapters 5, 6 and 7, respectively, of this manual.

The load-carrying capacity of commercial products or devices, such as jacks, beam hangers, deck overhang brackets and similar items, should be determined reference to a catalog, brochure or other technical literature published by the manufacturer, or by a load test performed in accordance with the instructions in Section 4-6, Manufactured Assemblies.

The load imposed on falsework beams and stringers by the slab support system of closely-spaced joists is actually applied as a series of concentrated loads. When calculating stresses in these members, an equivalent uniform load may be assumed.

The effect of beam continuity must be investigated. As provided by Division policy, any theoretical advantage resulting from continuity should be neglected; however, the adverse effects must be considered to prevent overstressing of any falsework member, (See discussion in Chapter 3.)

When calculating stresses, keep in mind that the individual falsework members as well as the system as a whole must be capable of resisting all imposed loads, including any direct or redistributed load caused by beam continuity, the construction sequence, prestressing, deck shrinkage, and similar design and construction features which may contribute to the overall load to be carried by the member under investigation.

## Section 4-2 Timber Members

### 4-2.01 Member Size

Timber members should be assumed as S4S unless shown otherwise on the falsework drawings.

The dimensions of rough cut lumber may vary appreciably from the theoretical dimension, particularly in the larger sizes commonly used in falsework construction. If the use of rough cut lumber is anticipated by the falsework design, the actual member size must be verified prior to use.

### 4-2.02 Allowable Stresses and Load Duration

The maximum allowable stresses for timber as listed in the specifications include an adjustment for an assumed duration of load of about ten days, which is typical for most falsework installations. Since these stresses are maximums, they may not be increased even though the actual duration of load may turn out to be less than the assumed duration.

Occasionally a situation will occur where the falsework will be loaded for a long period of time, such as, for example, when a continuous structure is constructed in stages. In such cases load duration considerations may warrant a reduction (by the contractor) in the allowable stress level.

Appropriate duration of load factors are shown in Figure 4-6.

### 4-2.03 Timber Beams

#### 4-2.03A Beam Span

For simple beams the span length is the clear distance from face-to-face of supports, plus one-half the required bearing length at each end.

For continuous beams the span length is the center-to-center distance between supports over which the beam is continuous. For end spans of-continuous beams the span length is the

distance between the center-of-bearing at the continuous support and the point of end support determined in accordance with the simple beam rule stated in the preceding paragraph.

4-2.03B Bending and Deflection

The extreme fiber stress due to bending ($f_b$) is calculated from the formula:

$$f_b = Mc/I \quad \text{or} \quad f_b = M/S$$

where $f_b$ is the bending stress in pounds per square inch; M is the bending moment, in inch-pounds; c is the distance from the neutral axis to the extreme fiber, in inches; I is the moment of inertia of the section about the neutral axis, in inches $^4$; and S is the section modulus, in inches$^3$.

Deep, narrow beams may require lateral support to prevent the compression edge from buckling before the allowable bending stress is reached. (See Section 4-2.03E, Lateral Support of Wood Beams.)

The maximum deflection ($\Delta$) of a uniformly loaded simple beam is given by the formula:

$$\Delta = \frac{5WL^3}{384\ EI}$$

where $\Delta$ is the deflection, in inches; W is the total uniformly distributed load, in pounds; L is the beam span, in inches; and E and I are, respectively, the modulus of elasticity and the moment of inertia, both in customary units.

4-2.03C Horizontal Shear

The formula for horizontal shear in a rectangular beam "b" inches wide and "d" inches deep is:

$$f_v = 3V/2bd \quad \text{or} \quad f_v = 3V/2A$$

where $f_v$ is the maximum horizontal shearing-stress, in pounds per square inch; V is the vertical shear, in pounds; and A is the cross sectional area of the beam, in square inches.

Theoretically, the strength of a wood beam in horizontal shear is a function of that strength property for the specie and the extent to which a particular beam may be checked or split at the end, However, tests by the U.S. Forest Products Laboratory and others have shown that with split beams the shear force is not uniformly distributed as assumed by the shear formula. Instead, in a split or checked beam, the upper and lower halves of the beam each resist a portion of the total horizontal shear force

independently of the force resisted by the beam at the neutral axis, so that a split or checked beam is capable of carrying a larger load than would appear to be the case using the general shear formula. Investigation of this phenomenon led to the derivation of so-called "two-beam" or "checked-beam" formulas from which the horizontal shearing stress may be determined with greater accuracy.

When reviewing falsework designs, the horizontal shearing stress should be computed using the general formula for a rectangular section [1]. When computing the total shear "V" to use in the formula, neglect all loads within a distance from the face of the support equal to the depth of the beam. If the allowable stress is exceeded when computed by the general formula, and if the contractor's beam design is based on the use of the checked-beam method of analysis, the shear value "V" may be determined by using the checked-beam formulas, and this value used in the horizontal shear calculation [2].

4-2.03D Compression Perpendicular to the Grain

Compression perpendicular to the grain at beam supports is given by the formula:

$$f_{c\perp} = P/A$$

where $f_{c\perp}$ is the compression stress perpendicular to the grain, in pounds per square inch; P is the applied load, in pounds; and A is the-bearing area in square inches.

When calculating the bearing area at the end of a beam, no allowance need be made for the fact that, as the beam deflects, the pressure at the heaviest loaded edge of the support appears greater than at the other edge. The wood yields enough so that pressures equalize, and overstressing does not occur.

---

[1] Note that the Division's Falsework Check computer program uses the general formula for rectangular sections to calculate horizontal shear.

[2] A discussion of checked-beam theory is not included in this manual because horizontal shear is seldom critical in bridge falsework spans. However, a discussion of the checked-beam method of analysis may be found in the *National Design Specification for Wood Construction* and other timber design manuals, and reference is made thereto.

## STRESS ANALYSIS

For small members (2x4's, 2x6's, 4x4's etc.) having a short length of bearing, it is standard practice to compute the bearing stress on the basis of an effective area determined by multiplying the actual area by the factor:

$$\frac{L + 3/8}{L}$$

where L is the bearing length in inches.

Use of the "effective area" factor will be permitted in the analysis of bridge falsework, provided the bearing length is less than six inches and the end of the load-carrying member extends three inches or more beyond the back face of the support.

To facilitate construction at locations where a conventional support may not be feasible, falsework members occasionally are supported by rods or dowels cast into a previous concrete pour. For example, lost deck forms may be supported- by a ledger beam bearing on dowels cast into the girder stem. In this or any other case where a timber member bears directly on a round support, there will be some yielding of the wood fibers as the load is applied, and some crushing will occur.

When investigating bearing adequacy. when timber members are supported by steel bars, the following policy will apply:

- When lost deck forms are supported by 2-inch nominal and wider ledger beams bearing on either 5/8-inch or 3/4-inch diameter reinforcing bar dowels, and provided the dowel extends far enough from the face of the concrete to-ensure full-width bearing under the ledger, a vertical design load of 900 pounds (maximum) may be used on each dowel.

- For all other cases where timber members bear directly on steel bars, bearing adequacy will be verified by means of an "equivalent length of bearing" equal to one-half the bar diameter. If the calculated stress based on an equivalent bearing length of one-half the bar diameter does not exceed the allowable stress, the detail may be approved even though some crushing will occur.

When investigating the bearing adequacy of a timber member on a round support, the bearing area obtained by using an equivalent length of bearing may not be increased further by applying the effective area factor previously discussed. Combining the two procedures would take unreasonable advantage of the bridging ability of wood fibers, and thus as a matter of policy will not be permitted for falsework analysis.

## 4-2.03E Lateral Support of Wood Beams

Beams having a large depth-to-width ratio may fail by lateral buckling (in much the same manner as long columns) before the allowable bending stress is reached unless they are restrained and forced to deflect in the plane of the load. The amount of restraint needed to ensure beam stability is a function of the depth-to-width ratio; however, it is not subject to precise analysis.

In the timber industry it is accepted design practice to check beam stability using guidelines developed empirically by the U.S. Forest Products Laboratory. However, these industry guidelines, which may be found in many timber design manuals and handbooks, were developed for permanent work and thus are too conservative for the temporary loading conditions typical of bridge falsework. Accordingly, the Division of Structures has modified the industry guidelines to reflect the temporary nature of falsework construction. The Division's criteria for evaluating timber beam stability are as follows:

- If the nominal depth-to-width ratio of a beam is 3:1 or less, no lateral support is needed.
- If the nominal depth-to-width ratio exceeds 3:l but is not more than 4:1, the ends of the beam should be braced at the top and bottom.
- If the nominal depth-to-span ratio exceeds 4:l but is not more than 6:1, the ends of the beam should be fully supported by blocking between beams.
- If the nominal ratio exceeds 6:1, in addition to blocking at the beam ends, blocking or diagonal bridging should be used at midspan for spans up to 16 feet, and at midspan and the quarter points for spans greater than 16 feet.

## 4-2.03F Beam Rollover [3]

When placed in other than a true vertical position, a timber beam will exhibit a tendency to rotate about its base as the load is applied. This rotational tendency, commonly referred to as "beam rollover", is an indication of instability which must be investigated during the falsework design review.

The tendency of beams to roll over when placed on a sloping surface is a function of the height and width of the beam,

---

[3] As used in this section, the term "beam" means and includes any horizontal load-carrying member of the falsework system, including joists.

the load, and the slope (the angle with horizontal expressed as a percentage) on which the beam is placed. Beam rollover should be investigated in all cases where beams are set on a sloping surface using the procedure described below to find the maximum beam height for a given load, slope and beam width.

In addition to rollover stability, beams placed on a sloping surface require a further check to verify that the allowable compressive stress is not exceeded at the downslope corner of the beam.

4-2.03F(1) Investigation of Rollover Stability

For analysis of beam rollover, it is assumed that the vertical load acts as a concentrated load on the top center of the beam. Refer to Figure 4-l and note that the load transfers through the beam to the surface in contact with the supporting member through a vertical line. The beam will be stable against rollover if the line of the vertical load reaction lies within the beam width.

When moments are taken about the downslope corner of a beam placed on a sloping surface, as indicated by point A in Figure 4-1, the beam will be stable against rollover provided the righting moment (RM) exceeds the overturning moment (OTM).

For a given slope and beam load, there is a limiting beam height-to-width relationship. For a given width, the limiting height is determined as follows:

$$\begin{aligned} OTM &= RM \\ h(P)\sin\phi &= b/2(P)\cos\phi \\ (h)\tan\phi &= b/2 \\ h = b/2\tan\phi &\approx b/[2(S/100)] \\ h &\approx 50b/S \end{aligned}$$

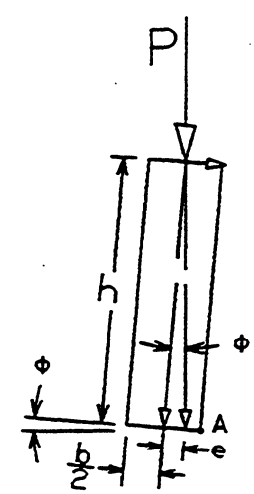


**FIGURE 4-l**

where P is the load on the beam, h is the height of the beam, b is the width of the beam, S is the slope expressed in percent, and $\phi$ is the tilt angle.

As an example, the limiting Slope for a 2x10 (1.5" x 9.25") beam is calculated as follows:

$$\text{Slope}(\%) = 50\frac{b}{h} = \frac{50(1.5)}{9.25} = 8.1\%$$

## 4-2.03F(2) Investigation of Compressive Stress

As the slope on which the beam rests increases, the compressive bearing stress between the beam and the supporting member at the downslope edge of the beam increases. This is the case because the center of gravity of the load acting through the top center of the beam remains vertical. The stress at the downslope edge is determined as follows:

- Calculate the compressive stress for normal bearing on the area between the beam and the supporting member as shown in Figure 4-2(a).

$$f_c = P\cos\phi/A$$

  where $f_c$ is the compressive stress; P is the load and $\phi$ is the slope angle, so that $P\cos\phi$ is the load component acting perpendicular to the bearing surface; and A is the bearing area.

- Calculate the stress due to vertical load eccentricity using the bending stress equation. See Figure 4-2(b)

$$f_e = Pe(\cos\phi)/S$$

  where $f_e$ is the stress due to the bending moment produced by the eccentric loading condition, e is the distance from the centerline of the beam at the bearing surface to the vertical reaction line, and S is the beam section modulus.

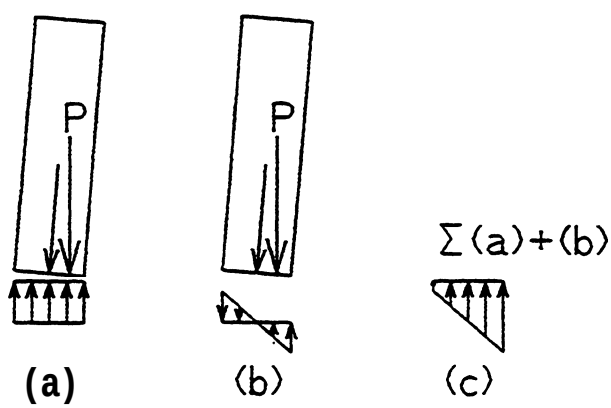


**FIGURE 4-2**

The sum of the stress values from steps 1 and 2 will give the total compressive stress at the downslope edge of the beam, as shown in Figure 4-2(c).

Except for joists bearing on camber strips, the calculated bearing stress on the downslope edge of a beam may not exceed the allowable stress of 450 psi. For joists bearing on camber strips, the calculated stress may not exceed the allowable stress of 900 psi.

As an example, the bearing stress on the downslope edge of a 2x10 (1.5" x 9.25") beam on a 6 percent cross slope resting-on a l-1/2" wide camber strip where the design load is 1900 pounds is calculated as follows:

$$\phi = \tan^{-1} 6/100 = 3.43°$$

$$e = h(\tan\phi) = 9.25(\tan 3.43°) = 0.555"$$

$$\text{Bearing Area} = 1.5(1.5) = 2.25 \text{ in}^2$$

$$\frac{P\cos\phi}{A} = \frac{1900 \cos 3.43°}{2.25} = 842.9 \text{ psi}$$

$$\frac{P\cos\phi ec}{I} = \frac{P\cos\phi e}{S} = \frac{1900 \cos 3.43°(0.555)}{\frac{bh^2}{6}} = 49.2 \text{ psi}$$

$$\text{Final Stresses} = 842.9 \pm 49.2 = 793.7 \text{ and } 892.1 < 900 \text{ psi}$$

## 4-2.03F(3) Blocking to Prevent Rollover[4]

Beams which otherwise would be unstable against rollover when investigated in accordance with the procedure described in the preceding sections may be made stable by the use of. full-depth blocking at the beam ends. Additionally, when the slope exceeds 8 percent, the following shall apply:

- If the nominal depth-to-width ratio is 4:l or less, blocking. should be provided at mid-span.
- If the nominal depth-to-span ratio exceeds 4:1, blocking should be provided at the l/3 points of the span.

For joists that are subject to rollover, toe-nailing to the supporting surface, in lieu of blocking, will not be permitted since the joist can break at the toe-nailed location.

---

[4] The tendency of a beam to roll over is an independent condition of instability; consequently, the need for blocking to prevent beam rollover occurs independently of any requirement for blocking or other means of support to ensure beam stability as discussed in Section 4-2.03E, Lateral Support of Wood Beams.

## 4-2.04 Timber Posts

For analysis, falsework posts may be considered as pinned at the top and bottom, regardless of the actual end condition, except for driven pile bents. In a timber pile bent, the piles may be assumed as fixed at a point four diameters below the ground surface, unless the actual soil condition dictates a different assumption. (See Chapter 7 for the procedure to be followed when investigating the capacity of timber pile bents.)

For analysis, timber posts are classified as short, long or intermediate columns, depending on the failure mode.

Short columns are those in which failure occurs as a result of axial crushing, and bending is not a factor. Most authorities define a "short" column as one having a slenderness ratio of eleven or less. (Slenderness ratio is the ratio of length to least dimension.) Long columns are those in which failure is due to buckling, and strength is governed entirely by stiffness. Intermediate columns are those in which failure is due to a combination of axial crushing and bending.

In short posts the axial unit stress in compression parallel to the grain is determined by dividing the total load by the cross sectional area of the post; hence the formula:

$$f_c = P/A$$

where $f_c$ is the compressive stress parallel to the grain, in pounds per square inch; P is the axial load, in pounds; and A is the cross-sectional area of the post, in square inches.

Analysis of long and intermediate posts requires the use of empirical formulas to obtain a limiting value for $f_c$, which is less than the allowable for-axially-loaded short posts. These formulas are derived from the general Euler formula, which was developed for axially-loaded pin-ended columns. For a square or rectangular cross-section, the Euler formula is:

$$F_c = \frac{0.3E}{(L/d)^2}$$

where $F_c$ is the maximum allowable unit stress, in pounds per square inch; E is the modulus of elasticity; L is the unsupported length, in inches; and d is the minimum dimension, in inches, measured normal to the plane of bending.

The Euler formula reduces to the following when the modulus of elasticity for wood of $1.6 \times 10^6$ psi is used:

$$F_c = \frac{480,000}{(L/d)^2}$$

The specifications limit the value of $F_c$ to 1600 psi. This limiting value corresponds to an L/d ratio of about 17.3.

In actual practice, the Euler formula gives conservative values since it is applied to restrained and square-end posts and columns, which are not as limber as the pin-ended columns from which it was derived.

4-2.04A Round and Tapered Posts and Piles

Other factors being equal, round and square posts having the same cross-sectional area have approximately equal stiffness, and therefore carry approximately the same load.

When analyzing round members, the least dimension "d" to use in the column formula should be taken as the length of the side of a square post whose area is equal to the cross-sectional area of the round post being used. This procedure will give results which are accurate within five percent for posts of the size and length ordinarily encountered in falsework construction.

When analyzing tapered members, the least dimension "d" to use in the slenderness ratio L/d is found by first determining the "equivalent diameter" of the tapered member by means of the following relationship:

$$D_0 = D_1 + \frac{D_2 - D_1}{3}$$

where $D_0$ is the equivalent diameter, $D_1$ is the tip or smallest diameter, and $D_2$ is the butt or largest diameter. All dimensions are in inches.

## Section 4-3 Timber Fasteners

### 4-3.01 Introduction

Design methodology and fastener values found in the *National Design Specification* for *Wood Construction* and other recognized timber handbooks are intended to apply to permanent work, and, thus are not necessarily appropriate for falsework. In view of this, the Division of Structures has developed alternative methodology that generally follows industry design practice, but which includes modifications where warranted to assure that the review procedures followed are reasonable in the light of false-work requirements.

### 4-3.02 Connector Design Values

Design values for both lateral load resistance and withdrawal resistance for wood fasteners in various wood species have been standardized by the timber industry, and are available in many timber design manuals and handbooks.

To facilitate review of falsework designs using timber bracing, fastener design values for Douglas Fir-Larch, which is the wood species commonly used for construction in California, are tabulated in Appendix E for nails, bolts, lag screws and drift pins. Design values for other fasteners, and for other wood species, may be obtained from the Sacramento Office of Structure Construction.

The design values in Appendix E are for normal duration of load, and may be increased for the shorter load durations typical of bridge falsework. See Section 4-3.07, Adjustment for Duration of Load.

### 4-3.03 Nails and Spikes

#### 4-3.03A Design Values

Withdrawal and lateral load design values for nails and spikes are tabulated in Tables E-4 through E-7 in Appendix E.

The tabulated values *are* for an individual nail or spike. When more than one nail or spike is used in a connection, the total design value for the connection is the sum of the design values for the individual nails or spikes.

Diameters shown in the design tables apply to fasteners before application of any protective coating.

## 4-3.03(1) Withdrawal Resistance

The tabulated design values are for a nail or spike driven into the side grain of the member holding the point with the axis of the nail or spike perpendicular to the direction of the wood fibers.

Nails and spikes have little resistance to withdrawal when driven into the end grain of a wood member. Accordingly, the use of connections where the nail or spike is subject to withdrawal from the end grain of wood will not be permitted.

## 4-3.03A(2) Lateral Resistance

The tabulated design values are for a nail or spike driven into the side grain of the member holding the point with the axis of the nail or spike perpendicular to the direction of the wood fibers. The values apply for a lateral load acting in any direction.

When a nail or spike is driven into the end grain of a wood member, the design value is reduced to 2/3 of the tabulated value.

The ability of a nail or spike to resist lateral forces is a function of the diameter and depth of penetration of that nail or spike into the member holding the point. The design value tables show both the maximum and minimum lateral resistance values-for a given type and size fastener. Refer to the design tables (Tables E-4 through E-7 in Appendix E) and note that the maximum lateral resistance is reached when the penetration is 11 diameters, which is identified in the tables as the desired penetration. The lateral resistance value at the desired penetration of 11 diameters may not be increased, even though the actual penetration may exceed 11 diameters.

When the penetration is less than 11 diameters, the design value is obtained by straight-line interpolation between the maximum and minimum tabulated values, provided the actual penetration is not less than the minimum penetration shown.[5]

---

[5] A penetration of less than the desired penetration may occur when round posts are used or when longitudinal bracing on skewed bents is not parallel to the side of a square post. In such situations, care must be taken to ensure that the minimum penetration is actually obtained, since nails or spikes having a penetration of less than the minimum will have no allowable lateral load-carrying value.

## 4-3.03B Required Nail Spacing

The timber industry has not adopted standards to govern the spacing of nails and spikes when used in an engineered timber connection. The industry guideline is that edge distance, end distance and spacing must "...be sufficient to prevent splitting of the wood." *(National Design Specification for Wood Construction,* 1991 Edition.)

In recent years there has been a trend toward the use of a greater number of nails in timber falsework connections than would appear warranted by prudent design considerations. In view of this, the Division of Structures has established the following guidelines which, as a matter of policy, will govern the spacing of nails and spikes when used to connect falsework bracing components:

- The average center-to-center distance between adjacent nails or spikes, measured in any direction, shall not be less than the required penetration into the main member for the size of nail being used.

- The minimum end distance in the side member, and the minimum edge distance in both side member and main member, shall not be less than one-half of the required penetration.

While proper installation of timber connections is primarily a field concern, the design review must assure that the members are large enough to accommodate the required number of nails or spikes when the nails or spikes are spaced in conformance with Division of Structures criteria as set forth above.

## 4-3.03C Toe-Nailed Connections

Industry practice recommends that toe-nails be driven at an angle of approximately 30° with the member being toe-nailed, and started approximately l/3 the length of the nail from the end of the member.

Design values for withdrawal and lateral load resistance must be reduced for toe-nailed connections, as follows:

- For withdrawal loading, the design load shall be reduced to 2/3 of the value shown in the applicable design table.

- For lateral loading, the design load shall be reduced to 5/6 of the value shown in the applicable design table.

## 4-3.04 Bolted Connections

### 4-3.04A Design Values

Design values for bolted connections are shown in Table E-1 in Appendix E.

Except for connections in falsework adjacent to or over railroads, threaded rods and coil rods may be used in place of bolts of the same diameter with no reduction in the tabulated values.

The values in Table E-l may be used without modification when the load is applied either parallel or perpendicular to the direction of the wood grain. When the load is applied at an angle to the grain, as is the case with falsework bracing, the design value for the main member is obtained from the Hankinson formula. The Hankinson formula is:

$$N = \frac{PQ}{P\sin^2\theta + Q\cos^2\theta}$$

where N is the design value for the main member; P and Q are, respectively, the tabulated design values for a load applied parallel to and perpendicular to the grain; and $\theta$ is the angle between the direction of the wood grain in the main member and the direction of the load in the side member. (See Figure 4-3.)

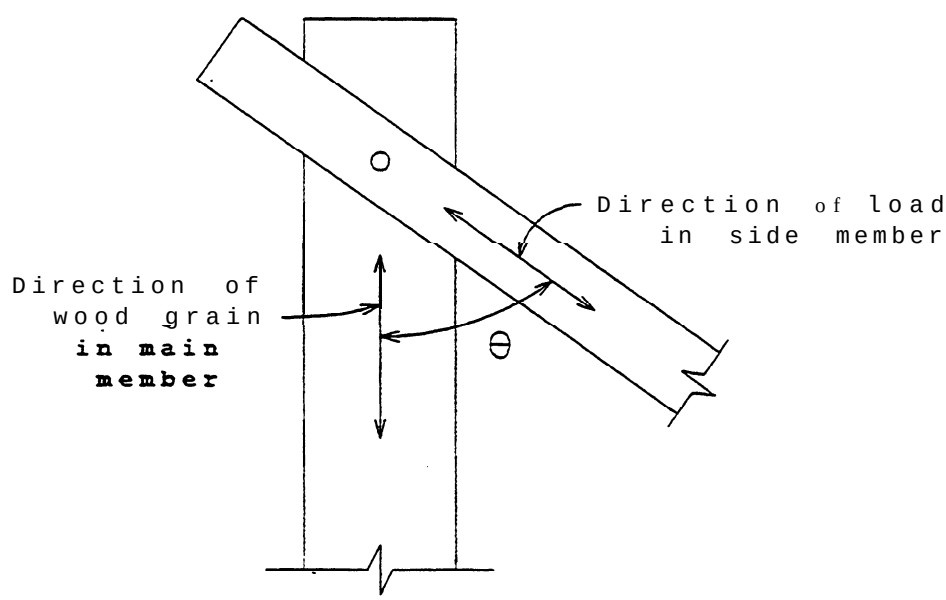


**FIGURE 4-3**

The design values in Table E-l are based on square posts. For a round post, use as the main member thickness the side of a square post having the same cross-sectional area as the round post used.

When appropriately sized steel bars or shapes are used as diagonal bracing, the tabulated design values for main members loaded parallel to the grain (P value) are increased 75 percent for joints made with bolts l/2 inch or less in diameter; 25 percent for joints made with bolts l-l/2 inches in diameter; and proportionally for intermediate diameters. No increase is allowed in the tabulated values for perpendicular-to-grain loading (Q value).

4-3.04B Design Procedure

Design values shown in Table E-1 are directly applicable only to three-member joints (bolt in double-shear) in which the side members are each one-half the thickness of the main member. This joint configuration is not typical of bridge falsework where side members are usually much smaller than main members and where two-member joints (bolt in single shear) are common,

Full-scale load tests on bolted connections carried out at the California Department of Transportation research facility revealed that the industry design procedure for two-member joints, which assumes a single-shear load factor of 0.50, is overly conservative for falsework members. A factor of 0.75 was found to be a more realistic value for falsework requirements. In view of this, the procedure adopted by the Division of Structures uses a shear factor of 0.75 when evaluating the adequacy of two-member bolted connections as explained in the following section.

4-3.04B(l) Two-Member Connections

Figure 4-4 shows a typical two-member bolted connection in which the side member is loaded parallel-to-grain and the main member is loaded at an angle to the grain.

For a two-member connection, the connector design value is the lessor of the design values for the side and main member determined in accordance with the following:

- For the side member, the design value is three-fourths of the tabulated design value (TDV) for a piece twice the thickness of the side member. To find the tabulated design value, enter Table E-1, Column P, with a member twice the thickness of the side member.

SIDE MEMBER DESIGN VALUE = (0.75)(TDV)

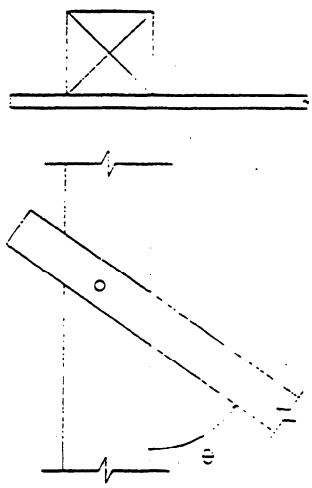

TWO-MEMBER BOLTED CONNECTION

**FIGURE 4-4**

- For the main member, the design value is three-fourths of the value obtained from the Hankinson formula using the tabulated parallel-to-grain (P value) and perpendicular-to-grain (Q value) design values in Table E-1 for a piece the thickness of the main member.

$$\text{MAIN MEMBER DESIGN VALUE} = \frac{(0.75)PQ}{P\sin^2\theta + Q\cos^2\theta}$$

where P and Q are, respectively, the tabulated design values for a load applied parallel to and perpendicular to the grain, and $\theta$ is the angle between the main and side members.

The design procedure discussed in the preceding paragraphs is valid only when the direction of the load is perpendicular to the axis of the bolt. If the load acts at an angle to the bolt axis, as will be the case with longitudinal bracing when false-work bents are skewed, the design values must be determined using a single-shear factor of 0.50, rather than the 0.75 factor used when the load is perpendicular to the bolt axis. For this condition, the design value formulas become:

$$\text{MAIN MEMBER DESIGN VALUE} = (0.5)(\text{TDV})$$

$$\text{MAIN MEMBER DESIGN VALUE} = \frac{(0.50)PQ}{P\sin^2\theta + Q\cos^2\theta}$$

## 4-3.04B(2) Three-Member Connections

Figure 4-5 shows a three-member connection in which the side members are loaded parallel-to-grain and the main member is loaded at an angle to the grain. In a three member connection, each side member connection functions as an independent two-member connection. The allowable connector design value for each side member is determined individually in accordance with the previously described procedure for two-member connections.

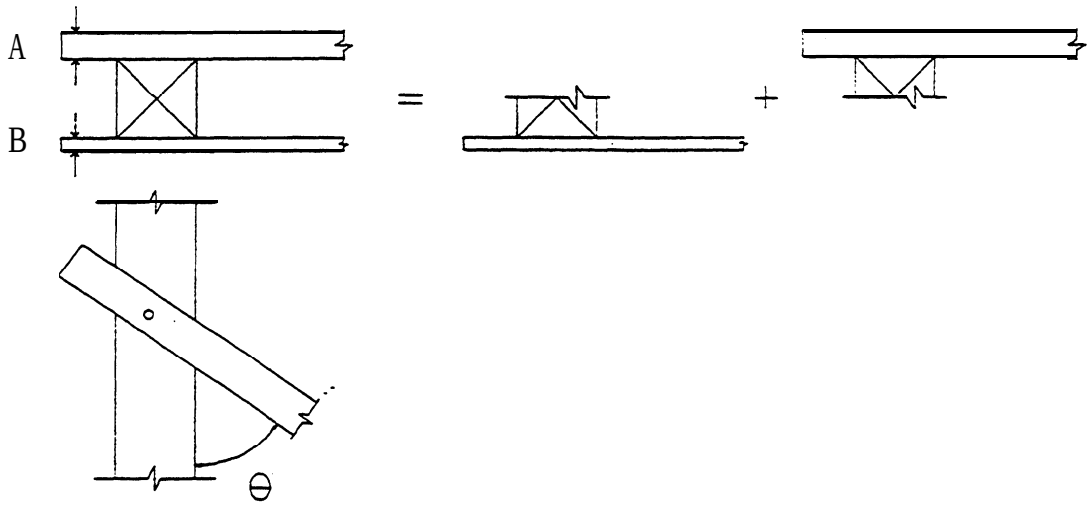


THREE-MEMBER BOLTED CONNECTION

**FIGURE 4-5**

## 4-3.04C Installation Requirements

Although installation is primarily a construction concern, the design review should verify that bolt installation will meet the following industry criteria for end and edge distance:

- For parallel-to-grain loading, the minimum end distance for full design load shall be:

  (a) In tension, 7 times the bolt diameter.

  (b) In compression, 4 times the bolt diameter;

- For perpendicular-to-grain loading, the minimum end distance shall be 4 times the bolt diameter.

- For parallel-to-grain loading in tension or compression, the edge distance shall be at least 1.5 times the bolt diameter.

- For perpendicular-to-grain loading, the edge distance toward which the load is acting shall be at least 4 times the bolt diameter and the distance on the opposite edge shall be at least 1.5 bolt diameters. When load reversal occurs, as will be the case for diagonal bracing in timber frames, 4 bolt diameters will be needed at both edges.

See Chapter 9 for additional information on fabrication of bolted connections and installation of bolts.

4-3.04D Multiple-Bolt Connections

When two bolts are used in a connection, the total connector capacity is the sum of the design values of the two individual bolts.

When two bolts are used, they must be set on the axis of the side member. The minimum distance (spacing) between the bolts is 4 times the bolt -diameter, measured center-to-center of the bolt holes.

When more than two bolts are used to connect timber members, industry guidelines impose additional requirements that must be followed in the design. These guidelines, to the extent they are applicable to falsework construction, are discussed in Appendix E. Appendix E also includes example problems showing the design procedure for multiple-bolt installations.

4-3.05 Lag Screw Connection [6]

Design values for lag screws for both withdrawal and lateral loading may be found in Tables E-2 and E-3 in Appendix E.

The tabulated values apply only when the lag screw is installed in a properly sized predrilled hole. (See Chapter 9.)

---

[6] As a point of interest, note that lag screws, or lag bolts as they are sometimes called, are not "bolts" in the commonly understood meaning of the term. Lag screws are pointed on the end opposite the head and have a screw-type thread. In a lag screw connection, the lag screw penetrates into but not through the main member. Bolts have a constant diameter and are uniformly threaded to receive a nut. In a bolted connection, the bolt will extend through all members. Because of their superior performance characteristics, bolts are assigned a much higher fastening value than lag screws of the same nominal diameter.

For withdrawal resistance, the tables show the withdrawal value in pounds per inch of penetration of the threaded part of the lag screw into the side grain of the member holding the point, with the axis of the screw perpendicular to that member.

For end-grain withdrawal, the allowable design value may not exceed 75 percent of the corresponding value for withdrawal from side grain.

For lateral load resistance, the tables list design values for loads applied both parallel and perpendicular to the direction of the wood grain. When the load is applied at an angle to the grain, as is the case with falsework bracing, the design value is obtained from the Hankinson formula. (See discussion in Section 4-3.04A, Design Values.)

The tabulated lateral load design values apply only when the lag screw is inserted into the side grain of the member holding the point. If for a particular use, a lag screw is inserted into the end grain of the main member, the design value is 2/3 of the value shown for a load acting perpendicular to-the grain (the Q value).

Industry standards require the spacing, edge and end distances, and net section for lag screw connections to conform to the requirements for bolted connections made with bolts having a diameter equal to the shank diameter of the lag screw.

### 4-3.06 Drift Pin and Drift Bolt Connections

Drift pins are steel rods cut to any desired length. Drift bolts are steel rods manufactured with a bolt head on one end. Typically, these fasteners are used to connect large members, such as caps and posts in a timber bent.

When drift pins or drift bolts are used at locations where the connection is subject to analysis, the required penetration will be determined as provided in this section.

#### 4-3.06A Lateral Resistance

In accordance with industry standards, the lateral resistance design value of a drift pin or drift bolt inserted into the side grain of a wood member may not exceed 75 percent of the design value for a common bolt of the same diameter and length in the main member.

The timber industry has not established design values for drift pins or bolts inserted into the end grain of a member, as would be the case for a falsework cap-to-post connection. For this type of connection, Division of Structures policy limits the lateral load-resisting capacity to 60 percent of the allowable side grain load (perpendicular to grain, or Q value) for an equal diameter bolt with nut. To develop this strength the drift pin or bolt should penetrate at least 12 diameters into the end grain.

## 4-3.06B Withdrawal Resistance

Withdrawal resistance is a function of several factors, such as the diameter of the drift pin or bolt, the length of penetration into or through a member, and the density of the wood. However, the timber industry has not adopted specific design values for withdrawal. Rather, the recognized industry standard is that drift pins or drift bolts subject to withdrawal loading are to be "...designed in accordance with good engineering practice? (From *National Design Specification for Wood Construction,* 1991 Edition.)

In the absence of industry-wide criteria, the following formulas developed by the U.S. Forest Products Laboratory may be used to estimate the withdrawa. resistance of drift pins and bolts. The formulas shown are applicable to Douglas-Fir Larch.

For withdrawal from side grain:

$$P = 186D^{3/4}$$

For withdrawal from end grain:

$$P = 85D^{3/4}$$

In the formulas, P is the allowable withdrawal load in pounds per inch of penetration, and D is the diameter of the drift pin or drift bolt.

Values obtained from the formulas are for normal duration of load, and should be increased pursuant to the provisions in Section 4-3.07, Adjustment for Duration of Load.

For installations where the penetration of a drift pin or drift bolt is into the end grain of the holding member and through the side grain of the member being held, as is typical of a cap and post or pile connection, the penetration into the end grain should provide a withdrawal resistance sufficient to develop the side grain withdrawal resistance of the member being held.

## 4-3.07 Adjustment for Duration of Load [7]

Design values shown in Tables E-l through E-8 are for normal load durations and may be increased for short-duration loading.

Selecting the proper duration-of-load factor to use in the calculations is a matter of engineering judgment. Reference to the duration of load graph in Figure 4-6 indicates that a factor of 1.25 will be applicable to most falsework designs, since falsework is seldom subjected to maximum loading for more than seven days. For loads of shorter duration, such as wind, a larger factor would be appropriate. For stage construction where the falsework will remain loaded for an appreciable length of time, a lower factor may be appropriate.

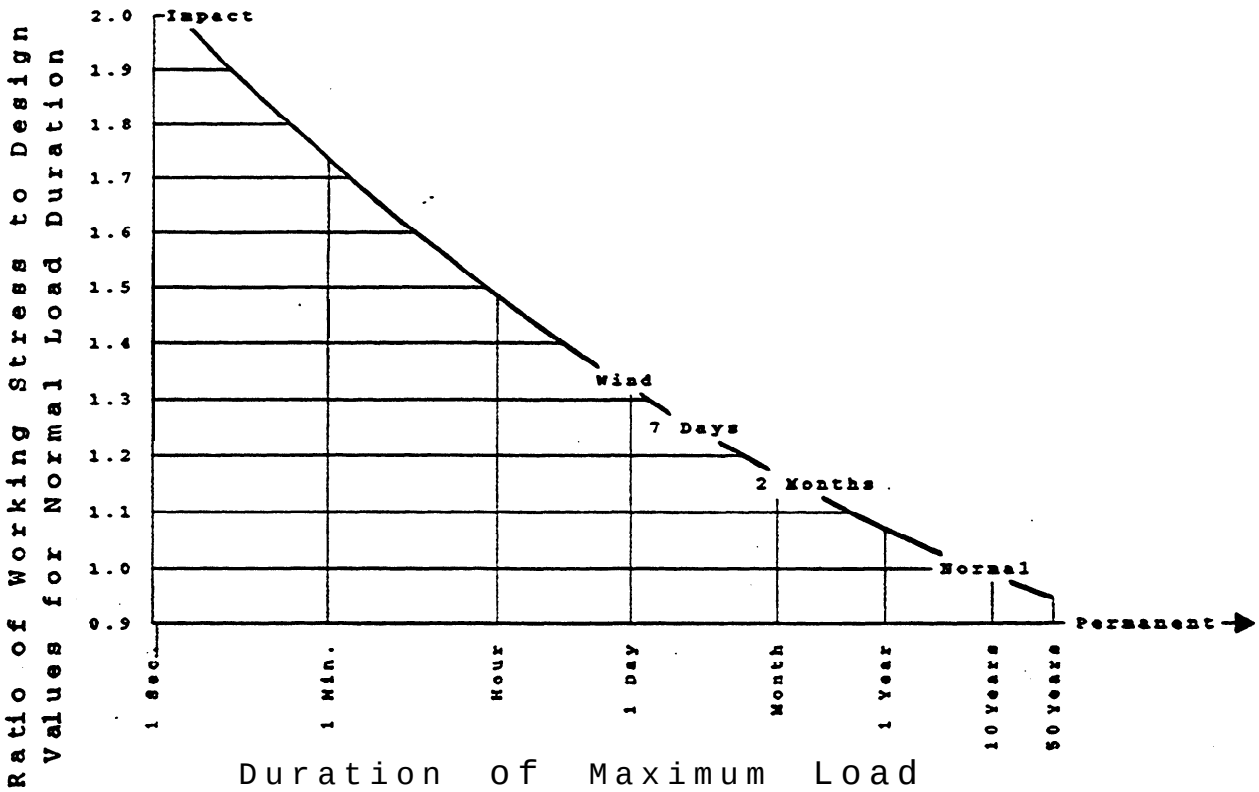


**FIGURE 4-6**

---

[7] The adjustment for duration of load as discussed in this section applies only to design values for timber connectors, such as nails, bolts and lag screws. Allowable stresses for. timber and structural steel components used in the connection, as set forth in the specifications, are maximums and thus may not be increased even though the actual duration of load in a given situation may be less than the assumed duration

For normal falsework construction, Division of Structures policy. will permit the use of the following duration-of-load factors:

- a factor of 1.25 when the falsework design is governed by the minimum load (two percent of the design dead load),
- a factor of 1.33 when the design is governed by the wind load.
- a factor of 2.0 (impact loading) for design of the sill-to-base, post-to-sill, cap-to-post and stringer-to-cap connections at traffic openings. (See Chapter 8.)

If the falsework will remain loaded for a relatively longer period, such as cast-in-place prestressed construction where stressing will be delayed or stage construction sequences for any type of concrete structure, the use of a smaller duration of load factor may be appropriate.

## Section 4-4 Steel Members

### 4-4.01 Allowable Stresses

The maximum allowable stresses and other design criteria in the specifications are based on the assumed use of structural steel conforming to ASTM Grade A36. This assumption is reasonable for beams and other sections commonly used in falsework construction, including unusual sections such as old railroad car beams and beams salvaged from dismantled bridges or buildings, because these older sections were rolled from Grade A7 steel. The physical properties of former Grade A7 steel are similar to the properties of the Grade A36 steel being produced today.

The specifications permit the use of higher working stresses for other grades of steel for all loading conditions except flexural compression, provided the grade of steel can be identified. Identification is the contractor's responsibility, subject to verification by the engineer. (See Chapter 9.)

Although the specifications allow higher working stresses when higher strength steels are used, it should be noted that the load-carrying capacity of steel beams will, in most cases, be-limited by deflection, not stress. When deflection controls, the use of high-strength steel will not be on any benefit since the limiting deflection cannot be increased.

High-strength steel beams may provide a greater load-carrying capacity in situations where beams are subjected to bi-axial bending.

## 4-4.02 Bending Stresses

The bending stress formulas are:

$$f = Mc/I \text{ or } f = M/S$$

where f is the bending stress, M is the bending moment, c is the distance from the neutral axis to the extreme fiber, I is the. moment of inertia of the beam about the neutral axis, and S is the beam section modulus.

If the compression flange is supported, these formulas may be used to determine the section needed to carry the applied load for a beam in which bending occurs in the vertical plane only. However, bridge falsework differs from most other construction in that falsework beams are usually set perpendicular to a supporting cap, and the cap is placed parallel to the bridge soffit rather than level. This construction configuration causes the beam to deviate from a true vertical plane by an angle which is equal to the soffit cross slope, and the result is bi-axial bending in the beam. Bi-axial bending is discussed in the following section.

If the compression flange of a beam is not supported, the maximum allowable bending stress must be reduced to prevent flange buckling. (See Section 4-4.04, Flange Buckling, for additional information.)

## 4-4.03 Bi-Axial Bending

Figure 4-7 shows a beam set on a sloping surface. For such beams, the theoretical centroid of the applied load P acts on the top flange through the projected centerline of the web, rather than through the center of gravity of the canted beam. When a vertical load is applied to a canted beam, the load is divided into two components: one acting through the web and one acting along the top flange. This loading condition produces bi-axial bending (i.e., bending in two planes) which decreases the load a given beam is able to carry. The decrease in beam capacity is a function of beam shape and soffit cross slope, and it cannot be determined by inspection. Accordingly, the effect of bi-axial bending must be investigated in all cases where falsework beams are not set in a true vertical plane.

When a beam is set on a sloping surface, the load component acting along the top flange causes the flange to deflect in the downslope direction. For nominal cross slopes, this lateral deflection is small and may be neglected. As the cross slope increases, however, the lateral deflection increases as well, and eventually becomes a factor for consideration since it can adversely affect both form alignment and reinforcing steel clearances.

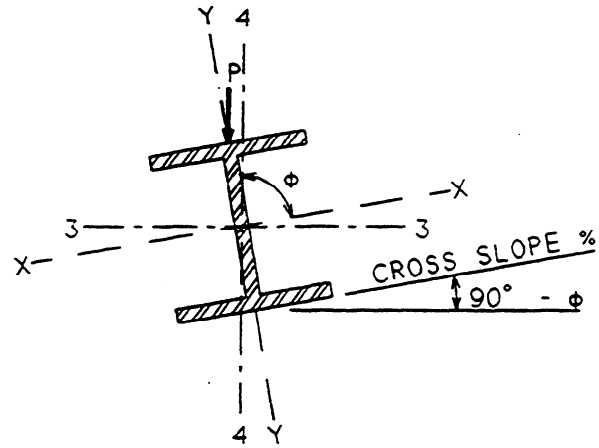


**FIGURE 4-7**

For analysis of bi-axial bending, Division of Structures policy provides for consideration of lateral deflection in all cases where the falsework beam is canted more than 2 percent.

Example Problem 16 in Appendix D illustrates the procedure for calculating stresses and deflections in beams subject to bi-axial bending.

4-4.03A Beams Canted 2 Percent or Less

Refer to Figure 4-7 and note that for any beam subject to bi-axial bending, the maximum bending stress ($f_b$) is the sum of the bending stresses in the x and y directions. The following formulas may be used to calculate $f_b$ based on the moments of inertia of the non-rotated section and the rotation angle $\phi$.

$$f_b = M\left(\frac{y}{I_{XX}}\sin\phi + \frac{x}{I_{YY}}\cos\phi\right)$$

$$I_3 = I_{XX}\sin^2\phi + I_{YY}\cos^2\phi$$

$$I_4 = I_{XX}\cos^2\phi + I_{YY}\sin^2\phi$$

Calculate the actual vertical deflection by using the moment of inertia about the 3-3 axis (I,) in the deflection equation. As previously noted, for this case the lateral deflection may be neglected.

As an alternative procedure, stresses and deflections may be determined with respect to the strong X-X and weak Y-Y axis by using the X and Y components of the applied load P. (See the example problem in Appendix D.)

## 4-4.03B Beams Canted More Than 2 Percent

The maximum bending stress and vertical deflection are computed in accordance with the procedure for beams canted 2 percent or less as discussed in the preceding section. In addition, for box girder structures, it is necessary to evaluate the effect of lateral deflection as discussed herein.

For box girder structures, the net lateral deflection of falsework beams under the weight of the bottom slab and girder stems only is limited to 1.5 inches. This policy limitation is considered necessary to mitigate the adverse affect of lateral movement during the soffit and girder stem concrete pour on form alignment and reinforcing steel placement and clearances.

Refer to Figure 4-8, which is a schematic depiction of the. movement of a point (Point A) on the top flange of a beam which is subject to bi-axial bending as it deflects under load.

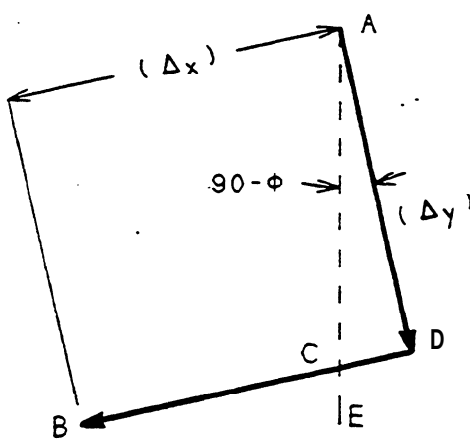


AD = vertical deflection = $\Delta_Y$

DB = lateral deflection = $\Delta_X$

CB = net lateral deflection
= DB - DC

**DC = AD(tan90° - $\phi$)**

**FIGURE 4-8**

The movement of point A to point B depicted in Figure 4-8 is the combined vertical and lateral deflection of the bottom slab and stems of a box girder structure as the concrete is placed. While the vertical deflection can be compensated for by camber strips, the lateral deflection DB will displace the bottom slab and stems from the planned alignment (line AE) by the distance CB, which is the net lateral deflection. The net deflection is limited to 1.5 inches maximum.

For the lateral deflection calculation, the vertical load is the dead load weight of the concrete in the soffit slab and girder stems. Use the component values of the vertical load to determine beam deflections about both the X-X and Y-Y axis.

## 4-4 .04 Flange Buckling

The compression flange of a beam may be visualized as a column loaded along its length by increments of load transferred to it by horizontal shear from the web. If the compression flange is narrow compared to the depth of the beam, the flange may fail by buckling in somewhat the same manner as a slender column.

Although methods for determining the critical buckling stress are quite complex, in steel members many simplifications are possible. Generally, the empirical formulas used are similar to column formulas, except that the flange width "b" is used instead of the radius of gyration.

The formula in our specification is:

$$f\ (\text{maximum}) = \frac{12{,}000{,}000}{Ld/bt}$$

but not more than 22,000 psi for unidentified steel or steel conforming to ASTM Designation A36, nor more than $0.6F_y$ for other identified grades of steel where $F_y$ is the minimum yield stress.

In the formula, L is the laterally unsupported length, d is the depth of the member and bt is the area of the compression flange. All dimensions are in inches. This formula gives the maximum allowable fiber stress in the beam. If the actual stress exceeds the allowable, the flange must be supported or the load reduced.

It is difficult to determine how much lateral support may be developed by other falsework members. For example, friction between the joists and top flange of a beam will provide some restraint, but the amount is indeterminate. As a matter of policy, therefore, friction between the joists and top flange will be neglected when investigating flange buckling.

Since it is impossible to predict the direction in which the compression flange will buckle, it is necessary to provide positive restraint in both directions. This is an important and often overlooked point. For example, the use of a tension tie between two adjacent beams or welding a light structural steel shape (such as a bar or angle) across the top flange of several beams will not prevent lateral movement. Such measures merely assure that all beams deflect in the same direction. Even when tension ties are used in combination with a compression strut, lateral restraint is not-effective because the restraining components cannot assure that the beams will act as a unit when a lateral force is applied.

Timber cross-bracing between adjacent beams is widely-used for flange support in falsework construction. In this method timber struts, in pairs, are set diagonally between the top flange of one beam and the bottom flange of the adjacent beam to form an X, and securely wedged into place. However, timber cross-bracing alone will not prevent flange buckling because timber struts can resist only compression forces.

Perhaps the most effective flange support method uses steel tension ties welded, clamped or otherwise secured across the top and bottom of adjacent beams in combination with timber cross-bracing between the beams, as shown in Figure 4-9.

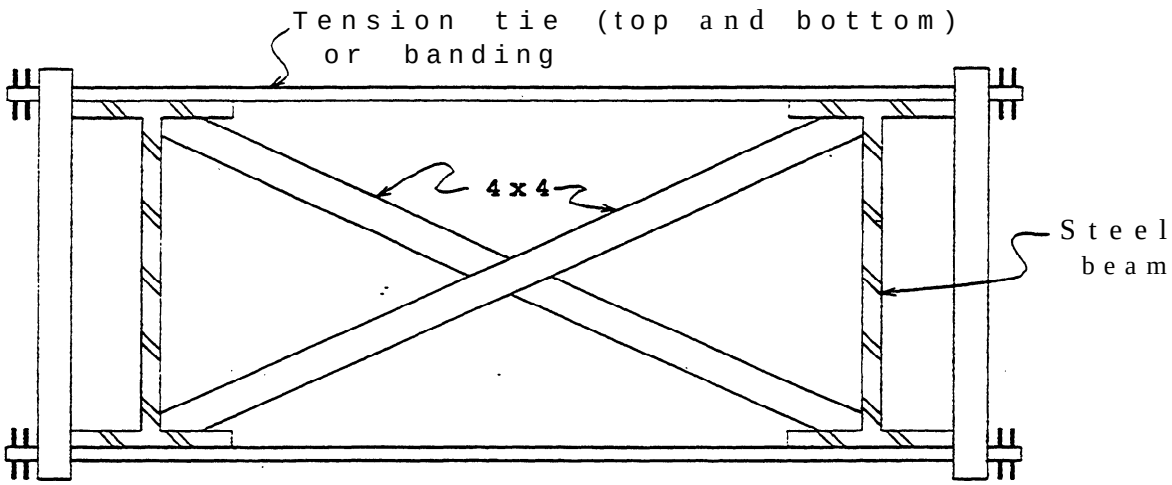


**FIGURE 4-9**

Many contractors use commercial steel banding material wrapped around pairs of adjacent cross-braced beams. Steel banding is less expensive and easier to install and remove than other types of tension components, but banding is not effective unless it is properly installed and tightened. Furthermore, when banding is used as part of a flange support system, some means must be provided to prevent an abrupt bend or kink at the point of contact with the outer edge of the beam flange. This is an important consideration because any kink or sharp bend in commercial banding is, potentially, a point of stress concentration which can reduce the strength of the banding material. The use of softeners will reduce this stress concentration.

Keep in mind that steel banding is a commercial product. If there is any question as to the adequacy of banding installed in a given situation, the contractor should be required to furnish manufacturer's catalog data and instructions for use.

Bracing, blocking, steel banding, ties, etc., required for lateral support of beam flanges must be installed at right angles to the beam. Bracing in adjacent bays should be set in the same transverse plane, if possible. If, because of skew or other considerations, it is necessary to offset the bracing in adjacent bays, the offset distance should not exceed twice the depth of the beam.

Finally, when investigating flange buckling, keep in mind that only a small force is needed to hold the compression flange in. position. In steel design for permanent work, it is common practice to use an assumed value of two percent of the calculated compression force in the beam flange at the point under consideration as the design force for the supporting brace, and this practice will be acceptable for bridge falsework.

Providing adequate flange support, when support is necessary to prevent overstressing the compression flange, is an important design consideration. The method of support, including all construction details, must be shown on the falsework drawings.

## 4-4.05 Beam Shear

The shearing stress at any point in a steel beam is calculated from the general formula for shearing stress. The general formula is:

$$v = VQ/Ib$$

where v is the shearing stress on any given horizontal section or plane through the beam, V is the vertical shear, Q is the statical moment about the neutral axis of that portion of the beam cross-section-which is outside of the plane where the shearing stress is wanted, I is the moment of inertia of the entire cross-section, and b is the width of the beam at the point under consideration.

Since the web of a steel beam resists most of the shear, the shearing stress is usually checked by the formula:

$$v = V/ht$$

where h is the overall depth of the beam (out-to-out of the beam flanges) and t is the web thickness.

If a shearing stress occurs in one plane, an equal shearing stress occurs in a plane through that point perpendicular to the first plane. Therefore, the shear formula may be used to determine both vertical and horizontal shearing stresses.

## 4-4.06 Web Crippling

Rolled beams should be checked to see that the end reaction and/or any concentrated load along the interior of the beam does not produce a compressive stress at the web toe of the fillet in excess of the allowable stress of 27,000 psi.

The following formulas are used to check web crippling:

For end reactions,

$$f = \frac{R}{(a+k)t_w}$$

For interior loads,

$$f = \frac{R}{(a+2k)t_w}$$

In the formulas, f is the stress, in psi; R is the concentrated load or end reaction, in pounds; $t_w$ is the web-thickness; k is the distance from the outer face of the flange to the web toe of the fillet; and a is the length of bearing, but not less than k for end reactions. All dimensions are in inches.

If the actual value exceeds the allowable, the web must be stiffened or the length of bearing increased,

When rolled beams require bearing stiffeners to prevent web crippling, the stiffeners may be designed to resist only the portion of the total load that is in excess of the load the beam is capable of resistitig without stiffeners.

## 4-4.07 Steel Posts and Columns

The specified column formula limits the design axial load to that which will not produce an average unit stress exceeding

$$\frac{P}{A} = 16{,}000 - 0.38\left(\frac{L}{r}\right)^2$$

In the formula, r is the radius of gyration of the section and L is the unsupported length. The limiting L/r value is 120.

In a column with pinned ends and no intermediate support, L is the actual length. Columns with other end conditions require the use of an effective length instead of the actual length. The effective length is the length of column which actually behaves as though it were pinned.

Determining the effective length of a column with restrained end conditions is an unnecessary refinement for falsework design. Accordingly, it is accepted practice to treat columns in falsework bents as though they were pin-connected, which is conservative for columns with end restraint.

## 4-4.08 Steel Bracing

For bolted connections, the bolt design values may be taken from the AISC *Manual of Steel Construction,* In accordance with AISC design practice, the calculated bearing stress on the projected area of the bolt in steel members may not exceed 1.35 times the specified yield strength of the steel. For A36 Grade material, the allowable bearing stress is 48,600 psi. This value may not be increased for falsework construction.

The strength of fillet-welded connections may be approximated by assuming a value of 1000 pounds per inch for each l/8-inch of fillet weld. While this value would be considered conservative for permanent work where welding is performed under controlled conditions, it is realistic for the welding procedures commonly used for falsework construction.

If the design of the connection is based on a higher weld value, welding must conform to the quality standards associated with permanent construction. (See Field Welding in Chapter 9.)

Structural steel components (angles, bars, etc.) are sometimes used as diagonal bracing in timber bents. In such cases, the bolt design values for parallel-to-the-grain loading in the main member may be increased as discussed in Section 4-3.04A, Design Values, No increase is allowed for perpendicular-to-the-grain loading, however.

## 4-4.09 Miscellaneous Steel Components

The adequacy of miscellaneous components (such as anchor bolts, column base plates, grillages, hangers, tie bars and similar steel components) and hardware items, when used at locations subject to analysis but not specifically covered by the Falsework Manual, will be determined in accordance with applicable design procedure or recommended practice included in the AISC *Manual of Steel Construction.*

## Section 4-5 Cable Bracing Systems

### 4-5.01 Introduction

As used in this manual, the term "cable bracing system" means a length of wire rope cable and an appropriate fastening device. Cable bracing systems may be used to resist both overturning and collapsing forces. (See Chapter 5 for a discussion of overturning and collapse as falsework failure modes.)

Cable systems are particularly effective in resisting the overturning of high falsework, and when used for this purpose they are relatively inexpensive as compared to other bracing methods. Cable is also used extensively as temporary bracing to stabilize falsework bents while they are being erected and/or removed.

Less common is the use of cables as diagonal bracing to resist internal collapse of a falsework bent. Design of cable systems to resist internal collapse is a highly sophisticated exercise, particularly with respect to such factors as the anticipated cable elongation, the amount of preloading or cable tension needed, the effect of cable tension on other falsework members, and similar factors which affect system stability.

Division of Structures policy with respect to the use of cable bracing systems, and the procedures and methodology to be used by field engineers when reviewing the adequacy of cable designs, are discussed in the following sections.

### 4-5.02 Required Information for all Cable Systems

When cable bracing is used, the cables and cable fastening devices are an essential part of the falsework design. All elements of the cable bracing system must be shown on the falsework drawings in sufficient detail *to* permit a stress analysis. In addition, the contractor must provide technical data showing the strength and physical properties of the cable to be used. (See Manufacturer's Technical Data and Required Cable Design Data in Sections 4-5.03 and 4-5.07B, respectively.)

The following information is to be shown on the falsework drawings for all cable systems:

- The cable diameter and, for internal bracing systems, the preload value.
- The type and number of fastening devices (such as Crosby clips, plate clamps, etc.) to be used at each connection.

- The method by which the cables may be tightened after installation, if tightening is necessary to ensure their continued effectiveness.

- For cables designed to resist overturning forces, the cable anchorage must be shown. (See Section 4-5.09, Cable Anchor Systems.)

- The location and method of attachment of the cable to the falsework must be shown. This is a particularly important feature of the design, since the connecting device must transfer both horizontal and vertical forces to the cable without overstressing any falsework component.[8]

4-5.03 Manufacturer's Technical Data

For application of the falsework specifications, a cable bracing system (i.e., the cable together with cable fastening devices) is a manufactured assembly. Accordingly, the cable must be installed in accordance with the manufacturer's recommendations, and the contractor must (if requested) furnish manufacturer's technical data.

For all cable systems, technical data from the manufacturer must include either the breaking strength (which may be identified as a rated or nominal strength) or the safe working load of the cable, the cable diameter, and enough descriptive information (number of strands, number of wires per strand, core type, etc.) to identify the cable in the field. Additional information is needed when cable is used as diagonal bracing to prevent the collapse of a falsework bent. (See Section 4-5.07, Review Criteria for Internal Cable Bracing Systems.) Manufacturer's technical data is also required for all cable fastening devices (Crosby clips, turnbuckles, shackles, etc.)

Since the adequacy of a cable bracing design cannot be verified without reference to the technical data provided by the cable manufacturer, such data is an essential part of the falsework drawing submittal. In any case where falsework drawings showing a cable bracing system are not accompanied by technical data from the cable manufacturer, the contractor should be informed immediately. Pursuant to Division policy, any falsework drawing submittal requiring technical data is not complete until such data is provided. (See Chapter 2.)

---

[8] When cables are used to prevent overturning of heavy duty shoring, cable restraint must be designed to act through the cap system. Cables should not be attached to *tower* components unless the contractor has obtained written authorization from the shoring system manufacturer. Such authorization must be furnished before the drawings are approved. (See Chapter 6.)

## WIRE ROPE CONNECTIONS
**(As compared to Safe Loads on Wire Rope)**

| Figure | Type of Connection | Efficiency |
|---|---|---|
| | Wire Rope | 100% |
| 2 | Sockets - Zinc Type | 100% |
| 3 | Wedge Sockets | 70% |
| 4 | Clips - Crosby Type | 80% |
| 5 | Knot and Clip (Contractors Knot) | 50% |
| 6 | Plate Clamp - Three Bolt Type | 80% |
| 7 | Spliced Eye and Thimble: | |
| | l/4" and smaller | 100% |
| | 3/8" to 3/4" | 96% |
| | 7/8" to 1" | 88% |
| | l-1/8" to l-1/2" | 82% |
| | 1-6/8" to 2" | 75% |
| | 2-l/8" and larger | 70% |

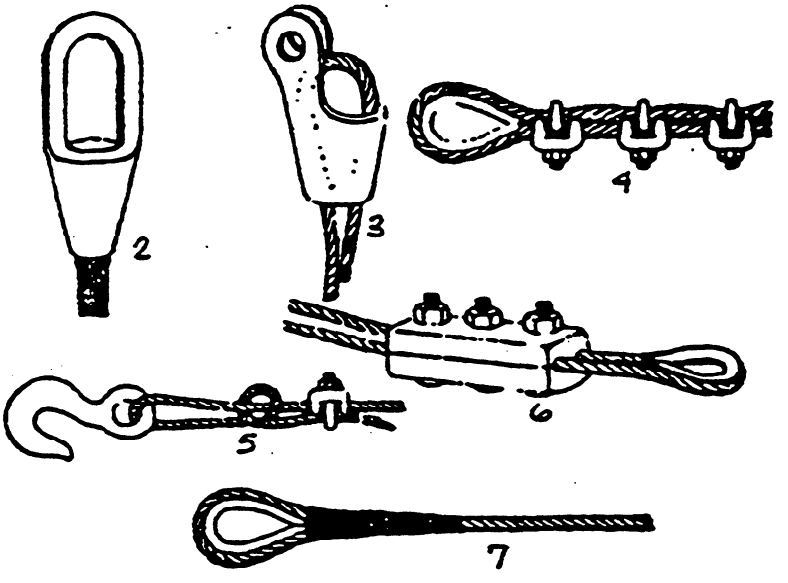


**TABLE 4-1**

In the absence of technical data, a load test will be required to establish cable strength and physical properties. (See Section 4-5.08, Cable Load Tests.)

4-5.04 Cable Connector Design

Cable connectors shall be designed in accordance with criteria shown in Table 4-1 and Table 4-3. Connector efficiency assumed in the design shall not exceed the values shown in Table 4-l.

If U-bolt (Crosby type) wire rope clips are used as connectors,, the number used and the spacing must conform to the data shown in Table 4-3, and must be shown on the drawings. Note that forged clips have somewhat greater holding strength. Forged clips are marked "forged" to permit positive identification, and have the appearance of galvanized metal. Malleable cable clips appear smooth and shiny.

4-5.05 Cable Elongation

Wire rope cable is an elastic material; consequently, it will elongate or stretch when loaded. However, cable is a unique elastic material in that its elongation is not uniform throughout the elastic range. Additionally, it is subject to inelastic deformation at loads well below the yield strength.

For descriptive purposes, the cable industry identifies the two properties that contribute to the total elongation experienced by a cable during its service life as "elastic" stretch and "constructional" stretch.

In general, cable elongation will not be a falsework design consideration for cable used as 'external bracing to prevent overturning of the falsework system or a system component. However, to ensure system stability, cable elongation must be considered when cable is used as internal bracing to prevent frame collapse, as discussed in Section 4-5.07, Review Criteria for Internal Cable Bracing Systems.

4-5.06 Review Criteria for External Cable Bracing Systems

4-5.06A Cable Design Load

When cables are used as external bracing to resist overturning, the horizontal design load to be resisted by the cable bracing system will be calculated as follows:

- When used with heavy-duty shoring, cable bracing shall be designed to resist the difference between the total overturning moment and the resistance to overturning provided by the individual falsework towers. (See Chapters 3 and 5 for overturning considerations.).

## WIRE ROPE CAPACITIES

**Safe Load in Pounds for New Improved Plow Steel Hoisting Rope**

6 strands of 19 wires. Hemp Center

(SAFETY FACTOR Of 6)

| DIAMETER INCHES | WEIGHT LBS/FT | SAFE LOAD LBS. | DIAMETER INCHES | WEIGHT LBS/FT | SAFE LOAD LBS. |
|---|---|---|---|---|---|
| l/4 | .10 | 1.050 | 1 | 1.60 | 15.000 |
| 5/16 | .16 | 1.500 | 5-1/8 | 2.03 | 18.600 |
| 3/8 | .23 | 2.250 | l-l/4 | 2.50 | 23.000 |
| 7/16 | .31 | 3.070 | l-3/8 | 3.03 | 26.900 |
| 1/2 | .40 | 4.030 | 1-1/2 | 3.60 | 30.700 |
| 9/16 | .61 | 4.840 | l-6/8 | 4.23 | 36.700 |
| 6/8 | .63 | 6.330 | 1-3/4 | 4.90 | 41,300 |

**TABLE 4-2**

## APPLYING WIRE ROPE CUPS

The only correct methnod of attatching U-bolt wire rope clips to rope ends is shown in the illustration. The base (saddle) of the clip bears against the live end of the rope, while the "U" of the bolt presses against the dead end. A useful method of remembering this is: "You never saddle a dead horse.

**The clips are usually spaced about six** rope diameters apart to give adequate holding power. A wire-rope thimble should **be used in the loop eye to prevent kinking when wire** rope clips are used. The correct number of clips for safe application, and spacing **distances, are shown in the table below.**

NUMBER OF CLIPS AND SPACING FOR SAFE APPLICATION

| Improved Plow Steel Rope Diameter Inches | Number of Clips Drop Forged | Number of Clips Other Material | Minimum Spacing (inches) |
|---|---|---|---|
| 3/8 | 2 | 3 | 3 |
| 1/2 | 3 | 4 | 3-1/2 |
| 5/8 | 3 | 4 | 4 |
| 3/4 | 4 | 5 | 4-1/2 |
| 7/8 | 4 | 5 | 5-1/4 |
| 1 | 5 | 6 | 6 |
| 1-1/8 | 6 | 6 | 6-3/4 |
| 1-1/4 | 6 | 7 | 7-1/2 |
| 1-3/8 | 7 | 7 | 8-1/4 |
| 1-1/2 | 7 | 8 | 9 |

**TABLE 4-3**

- When used with pipe-frame shoring, cable bracing shall be designed to resist the difference between the total overturning moment and the resistance to overturning provided by the shoring system as a whole. (See Chapter 6 for analysis of pipe frame shoring systems.)

- When used as external bracing to prevent overturning of all other types of falsework, including temporary bracing used to stabilize falsework components during erection and/or removal, cable bracing shall be designed to resist the total overturning moment.

4-5.06B Determining Allowable Working Loads

The maximum allowable load to be carried by a given cable will be determined in accordance with the following criteria:

- If the cable is new or in uniformly good condition, and if it can be identified by reference to a manufacturer's catalog or similar technical publication, the allowable cable load will be the breaking strength-of the cable as shown in the manufacturer's catalog, multiplied by the efficiency of the cable connector, and divided by a safety factor of 2. (That is, allowable working load = breaking strength x connector efficiency ÷ safety factor.)

  While the technical data provided by the manufacturer will in most cases show the breaking (or nominal) strength of the cable; some manufacturer's catalogs show only a recommended safe working load. Should this be the case, the cable design load may not exceed the safe working load value, unless the contractor elects to perform a load test.[9]

- If the cable is used and still in serviceable condition, but a manufacturer's catalog is not available, the contractor may elect to perform a load test. In such cases, the allowable working load shall not exceed the breaking strength as determined by the load test, multiplied by the connector efficiency factor, and divided by a safety factor of 2.

---

[9] It is important to note that, for a given cable, the safe working load recommended by the manufacturer will be considerably less than the allowable load determined from the breaking strength of the cable. This is the case because the recommended safe working load will be based on a safety factor of 5:l or more in consideration of the dynamic loading to which cable is ordinarily subjected, rather than the 2:l safety factor which is appropriate for the static loading condition associated with falsework construction.

- If the cable is used and still in serviceable condition, and if the contractor does not perform a load test, the allowable working load shall not exceed the wire rope capacity shown in Table 4-2 multiplied by the cable connector efficiency.

## 4-5.07 Review Criteria for Internal Cable Bracing Systems [10]

### 4-5.07A Limitations and Conditions of Use

Division of Structures policy limits the use of internal cable bracing systems to single tier falsework bents where the cable is fastened to the bent cap and sill beam. The use of cable to provide frame rigidity in multi-tiered bents, or in any bent where the cable is attached to a post or column, will not be permitted. (See Chapter 5 for definitions of single and multi-tiered bents.)

For analysis of single tier cable systems, Division policy limits the calculated horizontal deflection to a maximum value numerically equal to one-eighth inch per foot of post height, but not more than one-fourth of the post width measured along the cap or sill beam, or in the case of pipe columns, not more than one-fourth of the diameter of the pipe column.,

Limiting the horizontal deflection is necessary to prevent undesirable frame distortion, and to ensure that the vertical load reaction remains within the base width of the post or pipe column. The limiting values in the preceding paragraph assure this objective.

The calculated horizontal deflection must be based on cable elongation due to both elastic and constructional stretch, as discussed later in this section.

When used to provide internal stability in a timber bent, the cable must be attached to the timber members with an appropriate fastening device installed in accordance with the manufacturer's recommendations. Because of the need to accurately predict the amount of lateral deflection in the system, Division policy does not permit internal cable bracing to be looped around timber members. [11]

---

[10] As used in this section, the term cable also means and includes prestressing strand when prestressing strand is used in an internal bracing system.

[11] Looping of cables around timber members, while prohibited in internal bracing systems, is an acceptable practice when the cable is used to prevent overturning, such as in longitudinal and/or temporary bracing systems.

## 4-5.07B Required Cable Design Data

When cable is to be used as internal bracing, the technical data accompanying the falsework drawings must include the following information:

- Cable description (including cable nominal diameter, number of strands, number of wires per strand and core type,)
- Weight of the cable.
- Breaking or nominal strength. [12]
- Net metallic area and modulus of elasticity.
- Maximum constructional stretch (percent of loaded length.)

## 4-5.07C Factor of Safety

As discussed elsewhere in this manual, the allowable (or design) load-carrying capacity of a product or device, including cable used to prevent overturning, is obtained by applying a factor of safety based on the ultimate. strength of that-product or device. (See, for example, Section 4-5.06, Review Criteria for External Cable Bracing.) This approach is satisfactory for falsework because, in general, system integrity will not be jeopardized by inelastic deformation that may occur if a product or device is subjected to a load that exceeds its yield strength, provided the load is not greater than the ultimate strength. However, this practice is not appropriate for cable used as internal bracing because of the need to limit the total- cable elongation to a predictable amount. In view of this reality, when cable is used as internal bracing for falsework, the allowable working load must be related to the yield strength of the cable.

While a safety factor of 2 based on yield strength is considered satisfactory for falsework, it is noted that industry standards established by the Wire Rope Technical Board require the-safe working load for static loading conditions to be determined using a safety factor of 3 based on the nominal (breaking) strength of the cable. Since cables of the type used for falsework have a yield strength of approximately 65 percent of the nominal strength, the industry standard is consistent with the use of a safety factor of *2* based on yield strength. In view of this and to simplify the calculations, Division of Structures review methodology uses a safety factor of *3* based on the nominal (breaking) strength when determining the design capacity of the cable units.

---

[12] The *Wire Rope Users Manual* uses the term "nominal" strength to describe the maximum load that a given cable may be expected to carry, and this term may be used by the manufacturer as well.

## 4-5.07D Cable Preloading

After assembly, all cable units are to be preloaded to remove any slack in the cable and connections. Preloading is necessary to ensure that the cable units will act elastically when the loads are applied. [13]

Determining whether a given preload force is sufficient to ensure that the cable bracing system will act elastically involves a number of subjective considerations. In the past, an arbitrary value of 1000 pounds has been commonly used as a minimum preload force; however, the actual force needed to remove cable slack is a function of both the length and weight of the cable, and thus there is no single preload value that will be appropriate for all installations. [14]

To verify design adequacy, the Division of Structures uses the relationship between preload force and the theoretical drape of the cable hanging under its own weight. Refer to Figure 4-10 and note that dimension A is the midspan cable drape (i.e., the drape at the midpoint of the horizontal distance between cable connection points.)

For any given preload value, the drape may be calculated using the Figure 4-10 formula. Pursuant to Division of Structures policy, the preload force shown on the falsework drawings must tension the cable unit sufficiently so that the calculated cable drape, after the falsework is erected, will not exceed the following values:

| Cable Size | Maximum Cable Drape (A) |
|---|---|
| 3/8 | 1″ |
| l/2 | 2″ |
| l/2 | 2 3/4" |

Experience has demonstrated that a preload force of less than about 500 pounds may be insufficient to remove all cable slack. Therefore, the minimum preload value shall not be less than 500 pounds, regardless of other considerations.

---

[13] As used in this section, the term "cable unit" refers to all cables acting to resist forces in the same direction, and the term "cable" refers to each individual cable within the cable unit.

[14] This fact should be obvious since the required preload force for large diameter cables used in a high falsework bent will be significantly greater than the preload force required for a bent where the cable length is relatively short and small diameter cable is used.

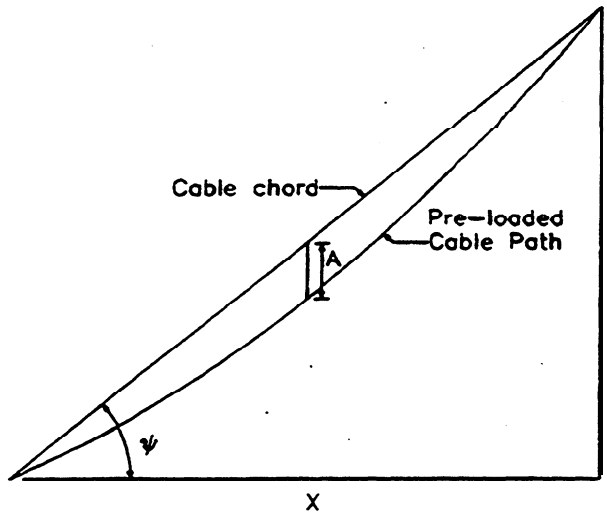


$$A = \frac{qx^2}{8P\cos\psi}$$

In the equation:

q = cable weight per foot

x= horizontal distance between cable connection points

P = cable preload value

**FIGURE 4-10**

For bents where the top cap and bottom sill are not parallel, as will be the case when the cap is set parallel to the bridge soffit, post height Variation will produce a non-symmetrical cable arrangement wherein the opposing cable units will have different lengths, and thus different elongations under a given preload force. However, the horizontal component of the cable elongation at the top cap connection must be equal in both directions to prevent distortion of the falsework bent. This means that, except for symmetrical cable arrangements, opposing cable units will have slightly different preload values.

Preload values are to be calculated by the contractor and shown on the falsework drawings, along with the method by which the required preload force is to be measured.

4-5.07E Determining Cable Elongation [15]

For a given installation and design load, the total cable elongation is a function of two independent factors. These factors are "elastic" stretch and "constructional" stretch.

Elastic stretch is the result of the inherent elasticity, or recoverable deformation, of the metal itself. Since the elastic properties of a given cable can be determined, elongation due to elastic stretch is predictable.

---

[15] The assumptions and design policy discussed herein are based on recommendations and design standards in the *Wire Rope Users Manual,* Third Edition, issued by the Wire Rope Technical Board. Industry recommendations and standards are modified as appropriate for falsework considerations.

Constructional stretch occurs when cable is loaded for the first time. When a cable is first loaded, the helically-wound wires and strands are pulled more tightly together, compressing the core and bringing all of the cable elements into closer contact. This results in a slight reduction in diameter and a corresponding increase in length.

Constructional stretch is influenced by several factors. These include the type of core, the number of strands and the number of wires in each strand, the manner in which the cable is wound, and the magnitude of the applied load.

Because of the number of variable factors involved, there is no mathematical constant applicable to all cable types from which elongation due to constructional stretch may be determined. For a given cable and load, however, the probable constructional stretch can be approximated with sufficient accuracy for cable design considerations.

4-5.07E(l) Determining Elastic Stretch

For an elastic material loaded within the elastic range, the elastic deformation (i.e., the change in length, or stretch) is directly proportional to the change in applied load, all other factors remaining equal.

The general formula for elastic deformation is:

$$\Delta = \frac{\text{Change in Load} \times \text{Length}}{\text{Area} \times \text{Modulus of Elasticity}}$$

Unlike other elastic materials, cable elongation is not directly proportional to the applied load over the full elastic range. This is the case because the modulus of elasticity for a given cable is significantly lower at low levels of applied load than at loads nearer to the normal working strength of the cable.

To accommodate this unique physical characteristic, it is standard practice in the cable industry to facilitate cable elongation calculations by using a nominal E value and a reduced E value, depending on the magnitude of the applied load. The nominal E value is used for that portion of the total load which exceeds 20 percent of the breaking strength of the cable. The reduced E value (which is equal to 90 percent of the nominal value), is used for the portion of the load between zero and 20 percent of the breaking strength.

If the cable design load is not greater than 20 percent of the cable breaking strength, the elastic stretch may be determined from the general formula for elastic deformation shown above, using the reduced E value.

If the cable design load is greater than 20 percent of the breaking strength, the total elastic stretch is the sum of $\Delta_1$ and $\Delta_2$ as given by the following formulas:

$$\Delta_1 = \frac{(0.2 \times \text{Breaking Strength} - \text{Preload})\ (L)}{A \times 0.9E}$$

$$\Delta_2 = \frac{(\text{Cable Load} - 0.2 \times \text{Breaking Strength})\ (L + \Delta_1)}{A \times E}$$

In the equations, A values are in feet; L is the loaded length of the cable, in feet; A is the net metallic area of the cable, in square inches; E is the nominal modulus of-elasticity, in pounds per square inch. Breaking strength, preload and cable load values are expressed in pounds.

4-507E(2) Determining Constructional Stretch

As previously noted, constructional stretch occurs when a cable is loaded for the first time. Constructional stretch is an important design consideration for internal cable bracing systems because, depending on cable type, a typical new wire rope cable initially loaded to its design working strength will undergo a permanent elongation of from l/2 to 1 percent of the loaded length.

Industry design practice assumes that constructional stretch is proportional to the applied load, and that all constructional stretch occurs within the elastic range. (That is, the total expected constructional stretch will have occurred when the applied load reaches the yield point load, or 65 percent of the cable breakingstrength.)

Constructional stretch is given by the following formula:

$$\Delta_{CS} = \left(\frac{\text{Applied Load}}{0.65 \times \text{Cable Strength}}\right)(CS\%)\ (L)$$

In the formula, $\Delta_{CS}$ is the constructional stretch, in feet; *CS%* is the constructional stretch, in percent, given by the cable manufacturer; and L is the cable length, in feet, between end connections. Applied load and cable strength are in pounds.

The anticipated constructional stretch, expressed as a percentage will be included in the cable design data provided by the manufacturer. If for some reason it is not provided and cannot be obtained, the analysis may be based on assumed values of 3/4 and 1 percent for wire core and fiber core cables, respectively.

Some types of high strength cable, such as prestressing strand, are commercially available with constructional stretch removed by preloading at the factory. Such cable will conform to the requirements for ASTM Designation A586 (structural strand) or ASTM Designation A603 (structural rope), and will be clearly identified as prestretched cable. When prestretched cable is used, it is not necessary to consider constructional stretch in the analysis. [16]

4-5.07F Procedure for Analysis [17]

When cable is used to prevent internal collapse of a falsework bent, the method used to evaluate the adequacy of the bracing system differs from the traditional methods normally used for frame analysis because of the need to consider-the effect of cable elongation and frame deflection on system stability.

In a cable-braced frame, the cable elongates as the horizontal design load is applied. Cable elongation allows the frame to deflect, producing vertical load eccentricity which must be considered in the analysis. Additionally, post reactions will be affected by the vertical component of the cable load.

---

[16] Note that cable conforming to ASTM Designation A586 or A603 may be either prestretched or non-prestretched. Prestretched cable must be so identified in the cable design data furnished by the manufacturer. If the cable is not clearly identified as prestretched, constructional stretch must be considered in the analysis, even though the cable may otherwise conform to the referenced ASTM specifications.

[17] The Division of Structures methodology for analysis of internal cable bracing systems, as described herein, assumes that the post or column is attached to the cap and sill by an eccentric pinned connection, and that the eccentricity is numerically equal to the horizontal movement of the cap due to cable unit elongation. These assumptions are valid for typical pipe column bents where the connections are not designed to resist moment, and for all timber bents. However, it is theoretically possible to design a pipe column frame with fixed connections. Any such designs will require a rigorous analysis by the contractor (with supporting calculations) and similar review by the engineer. In such cases, the engineer should contact the Sacramento Office of Structure Construction for the procedure to be followed.

## STRESS ANALYSIS

The following procedure (illustrated in Example Problem 17) is used to evaluate system adequacy:

1 . Determine cable lengths, post heights, and the vertical distance between the plane of the cable connection at the cap and the plane of the cable connection at the sill beam.

2 . Calculate the horizontal design load. For analysis of cable systems, the horizontal design load is the larger of (1) the wind load acting on the bent or (2) two percent of the total dead load based on the full superstructure cross section.

3. Calculate the capacity of the cable units, using a factor of safety of 3 based on the breaking (nominal) strength of the cable. (See Section 4-5.07C, Factor of Safety:)

4. Check the cable preload values shown on the falsework drawings.

5 . Using the horizontal design load from step 2, calculate the cable unit design load.

6. Compare the cable unit design load from step 5 and the cable unit capacity determined in step 3. If the design load exceeds capacity, the system must be redesigned.

7. Calculate the cable unit elongation, which is the sum of the elongations due to elastic and constructional stretch.[18]

(a) Calculate the elastic stretch, using the formulas shown in Section 4-5.07E(l), Determining Elastic Stretch.

(b) Calculate. the constructional stretch. Constructional stretch is expressed as a percent of the loaded length of the cable. For falsework bents, the loaded length is the length between end connections. Follow the procedure explained in Section 4-5.07E(2), Determining Constructional Stretch.

(c) Add the elastic stretch and constructional stretch to obtain the total elongation for the cable unit.

---

[18] As previously noted, Division of Structures policy requires a consideration of both elastic and constructional stretch when calculating the expected cable elongation, unless the cable to be used has been preloaded at the factory to remove the constructional stretch.

8. Calculate the horizontal displacement of the top cap due to cable unit elongation. For this calculation, all posts are assumed to rotate about their bases, and their tops move laterally the same distance as the cap, as depicted in Figure 4-11.

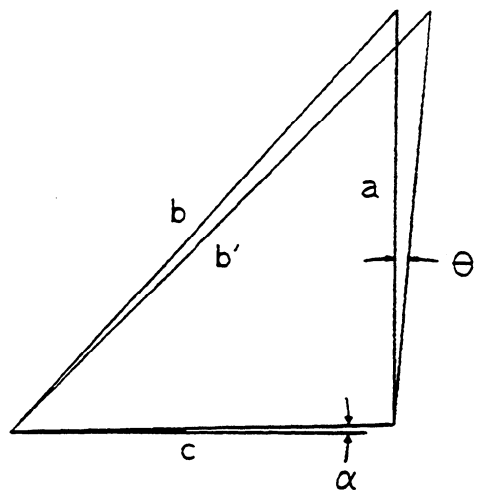


**FIGURE 4-11**

Refer to Figure 4-11 and note that the vertical distance between the cap and sill cable connection points at the location of the cap cable connection (vertical line a) may be used to complete. triangles for the preloaded (b) and fully loaded (b') cables, The law of cosines may be used to determine angles, since the dimensions of all three legs of the triangles will be known. Once the angle of rotation ($\theta$) of the posts has been determined, the horizontal displacement at the tops of the posts can be calculated.

9 . Compare the calculated horizontal displacement and the allowable horizontal displacement.

The calculated horizontal displacement is limited to one-eighth inch per foot of post height, or one-fourth of the post width or diameter, whichever is the smaller value. (See Section 4-5.07A, Limitations and Conditions of Use.) If the calculated horizontal displacement exceeds the allowable displacement, the system must be redesigned.

## 4-5.07F(l) Completion of Analysis for Box Girder Structures

The Standard Specifications provide for an intermediate loading consideration for box girder structures, so that the method of analysis for box girder structures differs from the method of analysis for other structure types.

For box girder structures there are two load combinations, designated in the specifications as Case I and Case II.

Case I. Design live load, plus total design dead load excluding the weight of the concrete in the deck slab, plus total horizontal design load, plus the vertical component of the cable unit design load. For analysis, all vertical loads act on the falsework in its deflected position.

Case II. Design live load, plus total design dead load, plus the total horizontal design load. For analysis, both the live load and the dead load act on the falsework in its Case I deflected position,

The procedure for box girders structures is as follows:

10. Calculate the post loads and the bending moment in the cap and sill beam for both the Case I and the Case II loading conditions.

    Except for symmetrical cable configurations, it will be necessary to determine vertical load eccentricity and post reactions in both transverse directions to find the maximum loads and stresses in the individual posts.

11. Investigate post adequacy for both Case I and Case II loading conditions;

    (a) Calculate the axial compressive stress ($f_a = P/A$) at each post.

    (b) Determine the allowable compressive stress ($F_a$) for each post.

    (c) Calculate the bending stress due to eccentricity ($f_b$) at each post using the formula:

    $$f_b = Pe/S$$

    where P is the post load calculated in step 10; e is the vertical load eccentricity, which is numerically equal to the horizontal displacement calculated in step 8; and S is the post section modulus.

(d) Use the combined stress expression to evaluate post adequacy. For this application, the expression is:

$$\frac{f_a}{F_a} + \frac{f_b}{F_b} \leq 1.0$$

In the expression, $f_a$ is the axial compressive stress, $f_b$ is the bending stress produced by vertical load eccentricity, and $F_a$ and $F_b$ are the allowable axial compressive and bending stresses, respectively.

For many cable-braced bents, stresses in the cap and sill beam may be determined by analysis in the usual manner; that is, using the Case II load combination. This procedure is usually satisfactory because the Case I load combination rarely governs cap or sill beam design. However, if the cables are attached near the end of a cap cantilever supporting a lightly loaded exterior beam, the Case I load combination, which includes the vertical component of the cable design load, may produce the maximum cap bending moment, and this should be kept in mind when reviewing cable-braced falsework bents.

4-5.07F(2) Completion of Analysis for Other Structure Types

The procedure described in the preceding section for box girder structures is generally applicable to slab and T-beam structures as well, except that for these structure types it is unnecessary to investigate system adequacy for an intermediate loading condition.

For the steps 10 and 11 calculations, the design load combination is the design live load, plus the design dead load, plus the vertical component of the cable unit design load, plus the horizontal design load.

For calculating post loads and stresses, all vertical design loads act on the falsework in its deflected position;

## 4-5.08 Cable Load Tests

In the absence of sufficient technical data to identify the cable and establish its safe working strength, the contractor may elect to perform one or more load tests. Judgment will be required as to the total number of tests needed.

For example, if the cable can be identified as to type and if it is in uniformly good condition, a single test may be sufficient for all cable of the same type. However, if the cable cannot be identified, or if it is old and obviously worn, it may be necessary to test each reel or drum furnished.

If a load test is needed to determine the physical properties of cable to be used in an internal bracing system, the test must be performed in a qualified testing lab. Field test results are not acceptable because determining cable properties such as the modulus of elasticity, the elastic stretch and the net metallic area of the cable requires precise measurements obtainable only with specialized testing equipment.

See also Section 4-6.02, Load Tests, for additional information pertaining to all types of load testing.

## 4-5.09 Cable Anchor Systems

In most cases cables will be secured by fastening the end to a concrete anchor block, although CIDH piles are sometimes used when relatively large forces must be resisted.

Concrete anchor blocks must be proportioned to resist both sliding and overturning. When checking anchor block stability, the weight of the anchor block must be reduced by the vertical component of the cable tension to obtain the net or effective weight to use in the anchorage computations.

For dry service conditions, the coefficient of friction assumed in the anchor block design should not exceed the following:

| | |
|---|---|
| Anchor block set on sand | 0.40 |
| Anchor block set on clay | 0.50 |
| Anchor block set on gravel | 0.60 |
| Anchor block set on pavement | 0.60 |

The tabulated friction values should be multiplied by 0.67 if it is likely the supporting material will become wet during the construction period.

For either concrete anchor blocks or CIDH piles, the method of connecting the cable to the anchorage is part of the design. The connecting device must be designed to resist both vertical (uplift) and horizontal forces.

If CIDH piles are to be used as cable anchors, the falsework drawings should show the pile diameter and length, the cement factor for concrete design, reinforcing steel details and cable anchor device. Additionally, since the load resisting capacity of a CIDH pile is dependant on the characteristics of the soil into which the pile has been cast, the contractor's design calculations should be given a cursory review to determine whether the assumed soil pressure and soil properties are consistent with the type of soil at the job site, and whether the design procedure follows recommended practice for piles subject to both uplift and lateral forces. Any inconsistencies should be brought to the contractor's attention immediately, and supplemental details and/or calculations requested. [19]

The adequacy of CIDH pile cable anchors should be evaluated in accordance with the methodology explained in Falsework Memo 9.

## 4-5-10 Splicing Cable

Because of the uncertainties associated with cable splicing, Division of Structures policy prohibits the use of splices in any cable used as falsework bracing.

---

[19] Design of piles to resist combined uplift and lateral forces is a sophisticated design procedure, which is sometimes approached superficially in the falsework design. However, the specification requirement for design calculations applies to piles and well as other elements of the falsework system. In the absence of calculations to support the design, the falsework submittal is not complete and the contractor should be so informed.

## Section 4-6 Manufactured Assemblies

### 4-6.01 Genera1 Information

In the specification context, the term "manufactured assembly" means any commercial product the use of which is governed by conditions and/or restrictions imposed by the manufacturer. Manufactured assemblies routinely used in falsework construction include products such as jacks, hangers, clips, brackets and similar hardware products as well as all types of manufactured shoring systems. When approved for use, such products may be incorporated into the falsework design, and upon construction of the falsework, they become a clearly identifiable component of the falsework system.

The specifications limit the load on, and/or the deflection of, any commercial product to the maximum recommended or allowed by the manufacturer of the product. Allowable loads and conditions or limitations of use must be shown in a catalog or technical. manual published by the manufacturer, or in a-statement of use compliance pertaining to a particular project.

A compliance statement, if furnished in lieu of catalog data, may be shown on a working drawing or included in a letter, but to be acceptable it must be signed by the manufacturer of the product under consideration, not by a material supplier or the contractor.

The specifications require the contractor to furnish technical data for manufactured assemblies, but only when such data is requested by the engineer. Therefore, the engineer should not hesitate to request catalog data or other technical information if it is needed to verify the load-carrying capacity of any manufactured product proposed for use in the falsework system.

Keep in mind that some manufacturer's catalogs are very brief and Show only general details. The engineer must be able to verify that the item is used as the manufacturer intended. Accordingly, if there is any question as to whether a device or product is being used properly, the contractor should be requested to furnish substantiating technical data or a statement of use compliance signed by the product manufacturer.

## 4-6.02 Load Tests

In any case where the falsework drawings show or describe a manufactured product or device which cannot be found in any catalog, the engineer should require a load test to establish the safe load-carrying capacity of that product or device.

The load test should be performed under conditions which will closely simulate the intended field use, particularly as to the method of support. If possible, the device should be tested to failure, in which case the safe working load may be assumed as one-half the ultimate load. This will provide a factor of safety of two, which is consistent with manufacturer's ratings for concrete form accessories. If it is not possible to test to failure, the working load used for the design should not exceed one-half of the maximum load carried during the test.

The procedure discussed herein for load testing of manufactured products or devices will also apply to noncommercial items, such as homemade deck overhang brackets, fabricated by the contractor. Note, however, that the required safety factor is increased to three for noncommercial products.

Load tests should be witnessed by the engineer and test results noted in the job records, since they form the basis of the determination of the allowable values to be used in the falsework design review.

When authorizing a load test, the engineer should keep the purpose of load testing in mind. Load testing is intended to determine or verify the load-carrying capacity of a commercially available product or device. Load testing should not be used to establish that a particular design detail or method of construction, although overstressed when stresses are calculated in the usual manner, is nevertheless capable of withstanding the imposed load without failing.

## 4-6.03 Beam Hangers

Beam hangers are hardware items which are placed transversely across the top flange of a beam or girder. Steel rods or bolts, which are inserted into threaded wire loops at the hanger ends, hang vertically to support the deck slab falsework or diagonally outward to support a deck overhang bracket.

Unbalancedloading (loading only one side of the hanger) will materially reduce the load-carrying capacity of the hanger unless it is of a type designed to be loaded on one side at a time, or unless special measures are taken to hold the hanger in place. Special measures may include welding to studs or shear

connectors. In no case, however, should beam hangers be welded to the top flange of a steel girder or to precast-prestressed girder stirrups.

## 4-6.04 Deck Overhang Brackets

Several types of metal brackets specifically designed to support cantilevered deck overhangs are available commercially. Typically, these brackets will be supported at the top by beam hangers, or by form bolt inserts cast into concrete girder stems, or by threaded rods or bolts extending through holes drilled in the web of steel plate girders. Rotation of the bracket is prevented by a diagonal leg braced against the exterior girder.

The specifications governing steel construction include certain restrictions which affect the design of falsework supporting deck overhangs on steel girder bridges. (See Chapter 3.)

## 4-6.05 Steel Joist Assemblies

Joist assemblies are essentially steel beams which can be adjusted to provide a wide range of span lengths. Catalog data should be consulted to determine the safe load-carrying capacity. and the allowable deflection. Note that when joist assemblies are used to support deck slabs between girders, design load deflection is limited to the maximum deflection allowed by the manufacturer, which in some cases may exceed 1/240 of the span. At all other locations, the specification limit (l/240 of the span) applies.

# CHAPTER 5. FALSEWORK STABILITY

## 5-1.Ol Introduction

The term "stability" as it is used throughout this manual means resistance to overturning or collapse of the falsework system as a whole or that portion of the falsework system under consideration. Resistance to both overturning and collapse is provided by the falsework bracing system, which must be designed to withstand all forces resulting from application of the horizontal design load.

Note that the term "falsework bracing system" as it is used in the specifications includes bracing designed to resist overturning, bracing designed to resist collapse, and struts, ties, anchor blocks and similar features used to prevent the overturning or collapse of any falsework component. Regardless of function, however, all elements of the falsework bracing system must be designed to resist all forces generated by the horizontal design load.

It is important to recognize the distinction between "overturning" and "collapse" as these terms are used to describe the failure modes when falsework is subjected to horizontal forces. Overturning is used when the falsework bracing provides sufficient rigidity to the falsework system as a whole, or to the element of the system under consideration, so that the system or element acts as a single, rigid unit. In such cases the falsework will fail by overturning, or rotation about its base. If, however, the bracing cannot prevent distortion of the falsework when it is subjected to horizontal forces, the system will collapse internally rather than overturn. The two failure modes are shown schematically in Figure 5-1.

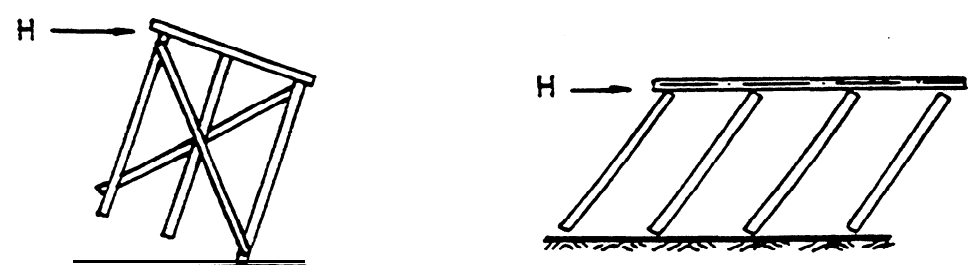


OVERTURNING FAILURE

COLLAPSING FAILURE

FIGURE 5-I

As a point of interest, bracing whose primary purpose is to prevent collapse is often referred to as "internal" bracing, whereas bracing whose purpose is to prevent overturning is called "external" bracing.

When investigating stability, keep in mind that the specifications do not require the falsework to carry the horizontal design load from its point of application through all members of the falsework system to the ground or other point of support. If the "falsework bracing system" will resist the overturning and collapsing forces produced by the horizontal design load, the falsework-design complies with the intent of the specifications.*

When following the provisions and procedures in this manual, stresses in falsework members produced by the application of a horizontal force need not be combined with stresses produced by vertical forces except in unusual cases where combining is necessary to ensure stability. For example, pile bents supporting falsework for structures over waterways often will be braced only above the waterline. In this type of design the bracing must be adequate to resist the horizontal design load in accordance with the general design criteria for falsework bracing systems, and the bent so braced will be considered as being rigid to the bottom of the bracing. Below the bracing, individual falsework piles will be subject to bending; consequently, horizontal as well as vertical forces must be considered and the resulting stresses combined to determine the actual stress.

Similar situations in which bending should be considered in the analysis will from time to time occur. The engineer will be expected to recognize all such situations and to combine stresses whenever this procedure is necessary to ensure the stability of the falsework system as a whole. (See Section 5-1.08, Combining Stresses, for additional information.)

---

* The rationale for the specification concept is the belief that a failure due to the action of horizontal forces will occur as a consequence of the overturning or toppling of a falsework member, or the internal collapse of a braced element of the system. Failure is not expected to occur as a consequence of one falsework member sliding across another. This is not to say that such a sliding failure could not occur under any combination of forces however unique, but the possibility is so remote it may be neglected for falsework design.

## 5-1.02 Internal Stability

Some falsework systems have inherent stability by reason of thenature of the materials used in their construction. For example, timber falsework bents have a degree of internal resistance to collapse, particularly where large, heavy posts are used. This "internal stability" is due to restraint at the top and bottom of the post, which, in turn, produces a resisting moment.

Since the amount of internal resistance actually developed under a given loading condition is a very intangible factor, it is Division of Structures policy to neglect the inherent ability of a falsework frame to resist collapsing forces in all cases where the height of the falsework post exceeds three times the post width. When post height exceeds the limiting ratio, resistance to overturning and/or collapse must be provided by diagonal bracing, or by blocking, ties or other means approved by the engineer.

## 5-l.03 Diagonal Bracing

In conventional falsework systems, the individual posts making up the falsework bent are stabilized against collapse by diagonal cross-bracing. The diagonal braces are installed across two or more vertical posts and securely nailed or bolted in place to make a single, rigid unit capable of resisting the collapsing forces produced by horizontal loads.

Because of the indeterminate nature of a diagonally-braced falsework bent, investigation of bracing adequacy using conventional methods of analysis is a difficult and time-consuming process. Furthermore, rigorous studies of the behavior of braced falsework bents have revealed that the actual load imposed on the compression members, under certain loading conditions, may be as much as two times greater than would be indicated by a conventional analysis.

As a horizontal load is applied to a diagonally-braced timber frame, the tension and compression members will each contribute to the resisting capacity until the design capacity of the compression members is reached. As additional load is applied, the overstressed compression members may yield or buckle, and therefore they may be incapable (theoretically) of contributing to the ultimate strength of the frame. In view of this reality and to ensure the compatibility of results obtained by our procedure with results obtained by a rigorous frame analysis, it is Division of Structures policy

to limit the contribution of the compression members, and the compression member connections, to one-half of their theoretical contribution when calculating the resisting capacity of the bracing system.

In consideration of the foregoing, the Division of Structures has developed a review procedure which simplifies the analysis and at the same time minimizes the risk of detrimental over-stressing of the compression members. This simplified procedure, called the "resisting-capacity" method of analysis, assumes that the collapsing force produced by the horizontal design. load will be resisted by the sum of the horizontal components of the allowable load-carrying capacities of the diagonals. To ensure stability, the sum of the horizontal components (i.e., the "resisting capacity" of the diagonal braces) must be numerically equal to or larger than the collapsing force.

When compression members have intermediate fasteners to reduce the unsupported length for design, Division policy requires the fasteners to be capable of resisting a force equal to five percent of the theoretical design capacity of the member, but not less than 250 pounds, applied at right angles to the member.

To ensure uniformity, Division of Structures policy requires the adequacy of diagonal bracing to be checked by the "resisting-capacity" method. The procedure depends on the number of vertical stories, or tiers, of bracing used in the bent, as discussed in the following two sections.

## 5-1.03A Analysis of Single-Tier Framed Bents

For single-tier bracing, the resisting capacity of the diagonal bracing system is calculated as follows, regardless of the type of fastener (nails, bolts or lag screws) used in the connection:

1. Determine the strength of the connection between brace and post. The strength value will be the same for both tension and compression members. (For this calculation, follow the procedure in Section 4-3, Timber Fasteners, for the type of fastener used.)

2. Determine the strength of the diagonal braces in tension.

3. Compare the two strength values. The smaller of these two values is the strength of the tension members.

4. Calculate the horizontal component of the strength value found in step 3. The horizontal component is the resisting capacity of the tension members.

5. Determine the strength of the diagonal braces in compression, as limited by the L/d ratio.

6. Compare the strength of the connection (calculated in step 1) and the strength of the braces in compression. The smaller of these two values is the theoretical strength of the compression members. One-half of the theoretical strength is the allowable strength of the compression members.

7. Calculate the horizontal component of the allowable strength (step 6) to obtain the resisting capacity of the compression members.

8. Add the resisting capacity of all tension members and all compression members to obtain the total resisting capacity of the diagonal bracing system.

To check bracing adequacy, compare the total resisting capacity of the diagonal bracing system, determined as provided above, and the collapsing force applied to the falsework bent.

For the comparison, the collapsing force is assumed as numerically equal to the horizontal design load acting on the bent. The collapsing force is further assumed as acting in the same plane as the horizontal forces making up the resisting capacity of the bracing system, but in the opposite direction. The resisting capacity of the bracing system must equal or exceed the collapsing force applied in either direction; otherwise the bracing is not adequate.

The "resisting-capacity" method of analysis is illustrated in example problems in the appendix.

### 5-1.03B Analysis of Multi-Tiered Frame Bents

When the diagonal bracing system consists of more than a single tier, the collapsing resistance of the frame may be limited by the resisting capacity of any individual tier of bracing within the frame. Consequently, the resisting capacity of the bracing in each tier must be evaluated independently of the other tiers to ensure that each independently-braced element of the bent (i.e., each tier) can withstand the collapsing force applied to that element.

The resisting-capacity concept as a means of checking the adequacy of diagonal bracing has been verified by subjective analysis of mathematical models of typical and atypical falsework configurations. These analytical studies reveal that a horizontal brace between the tiers in a multi-tiered frame makes only a marginal contribution to the total resisting strength of the frame, and under some loading conditions may actually decrease (although only slightly) the effectiveness of the compression members as compared to similar frames in which no horizontal braces are used. Since horizontal braces appear to be redundant members of the system, their effect on frame capacity may be neglected when checking diagonal bracing by the resisting-capacity method in all cases where the diagonals are capable of resisting compression. (Note, however, that a horizontal brace will be required between tiers in a multi-tiered frame in those cases where the diagonal braces can carry tension forces only.)

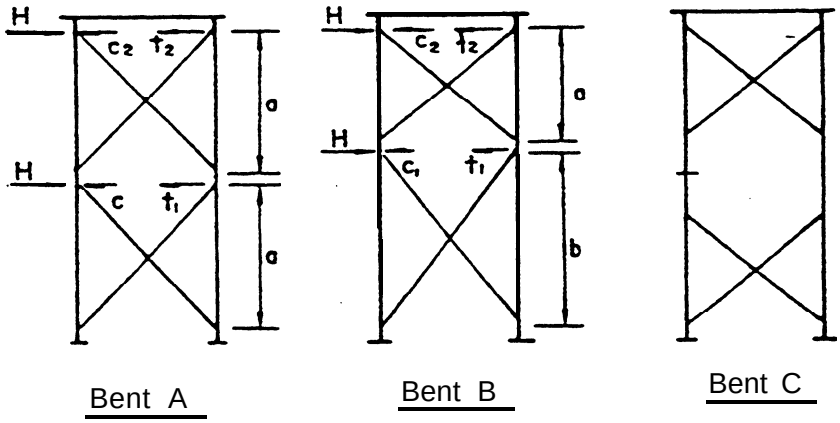


FIGURE 5-2

To understand the analysis, consider the diagonally-braced falsework bents shown schematically in Figure 5-2. Evaluating the adequacy of the bracing in Bent A, where the bracing system is the same in each tier, is simplified by symmetry. The procedure is as follows:

1. Calculate the resisting capacity of the diagonal bracing in either tier. (The values are the same for both tiers.) Follow the procedure discussed in Section 5-l.O3A, Analysis of Single-Tier Framed Bents.

2. Compare the total resisting capacity calculated in step 1 and the collapsing force produced by the horizontal design load. If the resisting capacity

equals or exceeds the collapsing force, the bracing in that tier is adequate, and therefore the bent bracing system is adequate as well.

The procedure for evaluating bracing adequacy when the bracing system is the same in each tier, as described herein for a two-tiered bent, will also apply to bents with three, or more, identical tiers of bracing.

When the tiers are of different heights or are otherwise dissimilar, the collapsing resistance provided by the bracing in me tier may not be the same as the collapsing resistance provided by bracing in other tiers. As previously noted, the resisting capacity of the bracing in each tier must be evaluated independently of the bracing in the other tiers.

Falsework Bent B in Figure 5-2 shows a-frame with unequal tier heights. The resisting capacity of the frame is determined as follows:

1. Calculate the resisting capacity of the bracing in Tier 2, following the procedure in Section 5-1.03A, Analysis of Single-Tier Framed Bents.

2. Compare resisting capacity and collapsing force. For this comparison, the collapsing force (i.e., the horizontal design load) is assumed as acting in a plane through the upper connections in the Tier 2 bracing, as shown in Figure 5-2. The resisting capacity of the bracing in Tier 2 must equal or exceed the collapsing force.

3. Repeat steps 1 and 2 for Tier 1.

If the resisting capacity of the diagonal bracing in each tier will withstand the collapsing force applied to that tier, the diagonal bracing system is adequate. If, however, the resisting capacity of either tier is less than the collapsing force, the bracing system is not adequate; hence the falsework design nay not be approved. (Note that excess resisting capacity in one tier may not be used to compensate for a deficiency in the capacity of any other tier.)

If the tiers of diagonal bracing are closely-spaced vertically, as is the case in Bents A and B in Figure 5-2, the effect of bending in the posts between the connections is small and may be neglected when investigating post capacity. If the tiers are separated, however, as are the tiers in Bent C, then bending may be an important factor.

To ensure uniformity, the effect of bending on post capacity will be investigated in accordance with the following policy:

1. If neither the vertical distance between tiers of bracing nor the unbraced post length extending above or below the tiers exceeds four times the post width, bending may be neglected.

2. If either the vertical distance between tiers of bracing or the unbraced post length extending above or below the tiers is greater than four times the post width, bending in the post including secondary effects due to horizontal deflection (i.e., the $P\Delta$ effect) must be considered. The analysis should follow the procedure for evaluating the adequacy of timber pile bents (see Chapter 7) except that the posts will be considered as pinned at both the top and bottom.

External cable bracing-will not prevent horizontal deflection at the top of a multi-tiered frame, even though the cable system is properly designed to resist overturning. Therefore, cables designed to prevent overturning may not be used to reduce the horizontal design load when investigating member adequacy under combined vertical and horizontal forces.

When bending is a factor for investigation, as discussed in subparagraph (2) above, the contractor's design calculations must consider the effect of horizontal deflection on member stresses, including the $P\Delta$ effect.

## 5-1.03C Steel Bracing

The resisting-capacity method of analysis, as discussed in the preceding sections, is also applicable when steel bracing is used with either steel or timber posts.

When bolted connections are used, the bolt values may be. taken from the AISC Manual of Steel Construction. The calculated bearing stress on the projected area of the bolt may not exceed 1.5 Fu where Fu is the specified minimum tensile strength of the steel. For A36 grade steel, Fu is 58 ksi.

The strength of welded connections may be approximated by assuming a value of 1000 pounds per inch for each 1/8-inch of fillet weld. While this value may appear conservative for permanent work where welding is performed under controlled conditions, it is a realistic value for the techniques and procedures commonly used when welding falsework components.

If a higher weld value is required by the design, welding procedures must conform to the quality standards normally associated with permanent construction. See Section 9-1.05, field Welding.

Structural steel elements (angles, channels, bars, etc.) are used occasionally as diagonal cross-bracing in timber bents. In such cases the NDS bolt design values for parallel-to-grain loading may be increased 75 percent, as provided in NDS Paragraph 8.5.6.3. No increase is allowed for perpendicular-to-grain loading, however.

## 5-1.04 Longitudinal Stability

To ensure longitudinal stability, it is necessary to provide a system of restraint that will prevent the falsework bents from overturning when the horizontal design load is applied in the longitudinal direction. This can be accomplished by diagonal bracing between pairs of adjacent bents, or by transferring the horizontal load from one falsework span to the next falsework span ahead without allowing any horizontal force to reach the bent between the two spans.

Consider, for example, the falsework system shown schematically in Figure 5-3. Longitudinal forces generated by the horizontal design load are carried in either direction across unbraced bents D and E to the point of longitudinal restraint at bents C and F. The falsework system is stabilized by diagonally-braced bents B-C and F-G, which are each designed to resist one-half of the total horizontal load acting on the system.

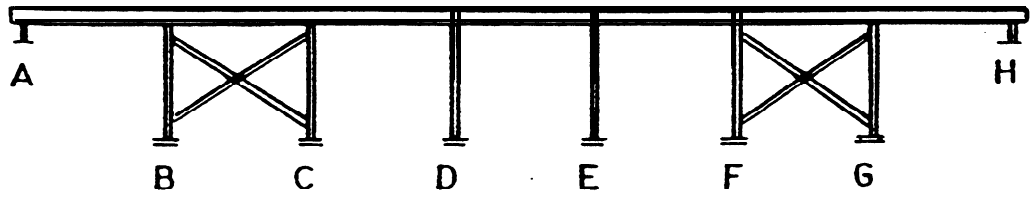


FIGURE 5-3

The adequacy of longitudinal cross-bracing used to stabilize adjacent bents will be determined in accordance with the procedure discussed in Section 5-1.03, Diagonal Bracing.

The method by which the horizontal design load is carried across an unbraced bent should be carefully scrutinized to ensure that horizontal forces cannot reach the bent under any loading condition. Many designs will take advantage of frictional resistance between stringer and cap to transfer at least a part of the total longitudinal force acting at the bent. When investigating the load transfer capability of such designs with the falsework in an unloaded condition, keep in mind that friction will not be developed until a vertical load is applied, Therefore, in the unloaded condition do not allow more frictional resistance than will be developed by the dead load of the falsework members plus an allowance for the weight of forms and reinforcing steel.

If frictional resistance alone is not sufficient to withstand the horizontal design load, some positive means of restraint must be provided to carry that portion of the total load in excess of the maximum allowable frictional resistance. The term "positive means of restraint" includes blocking, bracing, dowels, clips, cables and similar mechanical connecting devices which are capable of transferring horizontal forces in the absence of a vertical load, but it does not include "C" clamps when such devices are proposed for use as a means of increasing the friction between stringer and cap or other adjacent falsework members.

Devices used to transfer horizontal forces across an unbraced bent must be spaced far enough apart transversely so as to prevent eccentric loading on the restraining member. In general, this will require at least two points of mechanical transfer for each independent element of the falsework system. One-point transfer may be acceptable under unusual circumstances such as a case where the force to be transferred is small when compared to the total horizontal load, or where each independent element is relatively narrow. This is a matter of engineering judgment. In case of doubt, two points of load transfer should be required.

### 5-1.05 Overturning

If the falsework system, or the element of the system under consideration, is adequately braced to prevent collapse, the system or element may nevertheless fail by overturning, or rotation about its base, when the horizontal design load is applied. Overturning failure will occur unless the falsework is inherently stable against overturning by reason of its configuration, or is externally braced to prevent overturning.

If stability analysis, it is assumed that the horizontal design load produces a moment that acts to overturn the falsework system or element of the system under consideration. For descriptive purposes, this moment is called the "overturning" moment.

## FALSEWORK STABILITY

When calculating overturning moments, the moment arm will be measured from a plane at the top of the falsework member that is set on the ground, and the horizonal design load will be applied to the falsework in accordance with the following:

Actual loads (such as those due to construction equipment or to the concrete placing sequence) will be considered as acting at the point of application to the falsework.

Wind loads will be considered as acting at the centroid of the wind impact area for each height zone. When wind loads govern the design, however, the horizontal design load (to be used in calculating the overturning moment) is applied in a plane at the top of the falsework post or shoring. See Section 3-1.05, Wind Loads.

All other horizontal loads, including the minimum load when the minimum load governs, will be assumed as acting in a plane at the top of the falsework posts or shoring.

When calculating the moment acting on other elements of the falsework where stability is a factor for consideration, such as a pony bent system, the moment arm will be measured from the base of that particular falsework element. Actual loads and wind loads will be applied in accordance with the criteria in the preceding paragraphs. All other horizontal loads will be assumed as acting in a plane at the top of the element of the falsework system under consideration.

### 5-1.05A Calculation of Resisting Moments

When a horizontal load is applied to a falsework frame or tower, the overturning moment thus produced will be resisted up to a point by a resisting or righting moment generated by the weight of the falsework and the total supported dead load. If the resisting moment is greater than the overturning moment, the falsework is stable against overturning and no external bracing will be required. If the resisting moment is less than the overturning moment, the difference must be resisted by bracing, cable guys or other means of external support .*

---

* For falsework analysis it is not necessary to provide a factor of safety against overturning. In accordance with Division of Structures policy, if. a falsework frame or tower is theoretically stable (no uplift in any post or tower leg) external bracing is not required.

When calculating resisting moments for falsework in the "unloaded" condition, the total supported dead load will include the weight of falsework beams, forms and reinforcing steel, but not concrete. In the "loaded" condition, the weight of the concrete actually in place will be included as well.

To facilitate analysis, the weight of forms and reinforcing steel in pounds per square foot of bridge soffit may be estimated. Use a factor of 1.5d for prestressed structures and 2.33d for conventionally reinforced structures, where "d" is the superstructure depth in feet.

5-1.05B Effect of Overturning on Post Loads

When external bracing is not required to resist overturning, do not overlook the effect of the overturning moment on post loads when the falsework is fully loaded, Consider the bent in Figure 5-4.

In the loaded condition the theoretical post load (dead load plus live load) of 50 kips will be increased or decreased by the post reaction created by the overturning moment, or the vertical component of the resisting couple acting through the post. In the bent shown, the reaction is 4 kips and the post design load is 54 kips.

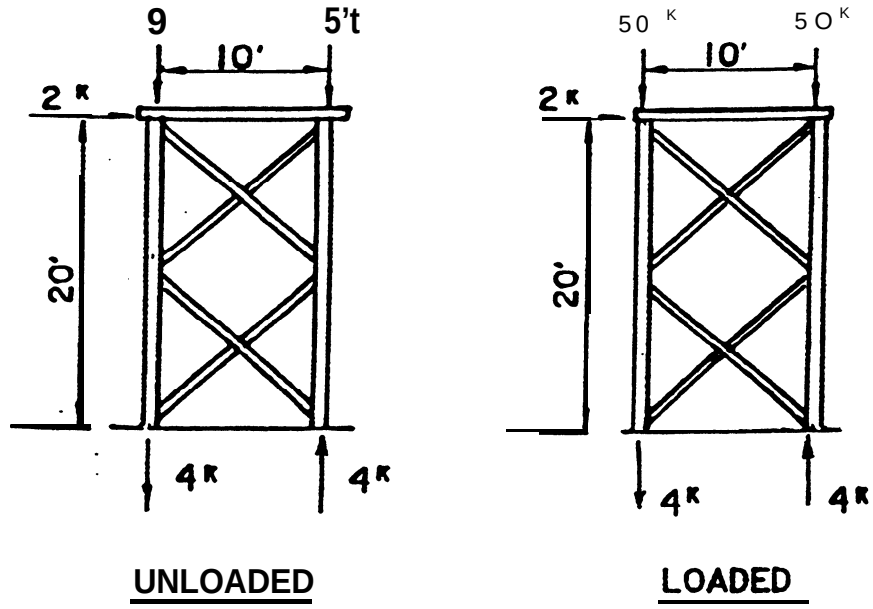


FIGURE 5-4

## FALSEWORK STABILITY

In a stable bent with more than two falsework posts, the post reactions are proportional to their distances from the center of rotation, and may be obtained by algebraic summation.

### 5-1.06 Pony Bent Systems

The stability of pony bent systems should be given special consideration. Pony bents should be independently braced, and the bracing must be capable of resisting the overturning moment produced by the horizontal design load acting at the top of the pony bent.

Pony bents are usually erected on and supported by a platform constructed at the top of the primary load-carrying members.
The platform functions as a horizontal diaphragm, and thus stabilizes the entire falsework system.

If a stabilizing platform is not incorporated into the falsework design, the individual bents must be braced or tied together in some manner to prevent lateral displacement at the bottom of the pony bent system.

### 5-1.07 Multiple & Built up Cap Systems

Multiple cap systems are inherently less stable than single cap systems. Similarly, cap systems that are poorly constructed by utilizing an excessive amount of built-up material between the supporting foundation and cap beam are more vulnerable to stability problems.

When investigating the stability of a multiple cap system, it is important to remember that the stability of the system will decrease as the distance between the supporting members and the top of the cap/sill beam increases. Cap and sill beam assemblies (as defined below) should adhere to a maximum height to width ratio of 2:1 unless the falsework designer determines that a more conservative approach is needed. In addition, multiple layers of supporting material must be equal or greater in width than the previous layer, hence forcing a pyramid shape. These requirements are illustrated in the following Figures 5-5,5-6 and 5-7.

The following cap/sill beam definitions shall be used for purposes of checking the **2:1 ratio.**

> In the overturning direction **perpendicular to the centerline** of the falsework bent, a sill beam assembly shall include all material from the **top**

flange of the sill beam to the top of the pad (See Figures 5-5 and 5-6). A cap beam assembly shall include all the material from the **top** flange of the cap beam to the top of the post.

In the overturning direction **parallel to the centerline** of the falsework bent, a sill beam assembly shall include all material from the **bottom** flange of the sill beam to the top of the pad (See Figure 5-7). A cap beam assembly shall include all the material from the **bottom** flange of the cap beam to the top of the supporting member (e.g. post).

The 2:1 height to width criteria shall be strictly enforced during both falsework plan review and construction phases. Often multiple capping or excessive stacking of material is done to correct grade errors discovered during falsework construction. This is an unacceptable construction practice and shall not be allowed.

On occasion a situation may arise where the falsework designer chooses to engineer a cap/sill assembly that does not meet the 2:1 height to width criteria. In general cap/sill assemblies that do not meet the 2:1 ratio should be strongly discouraged and alternatives should be explored. However, the 2:1 criteria may be exceeded if the falsework cap/sill assembly is externally stabilized. The external stabilizing support system must be designed to withstand the greater of the horizontal wind or construction load or a minimum 2% of the falsework dead load force (similar to the longitudinal stability analysis) applied to the top of the upper most cap/sill beam. In addition, the stabilizing support system must be designed to accommodate both grading adjustments and bent settlement without inducing additional horizontal loads into the cap system.

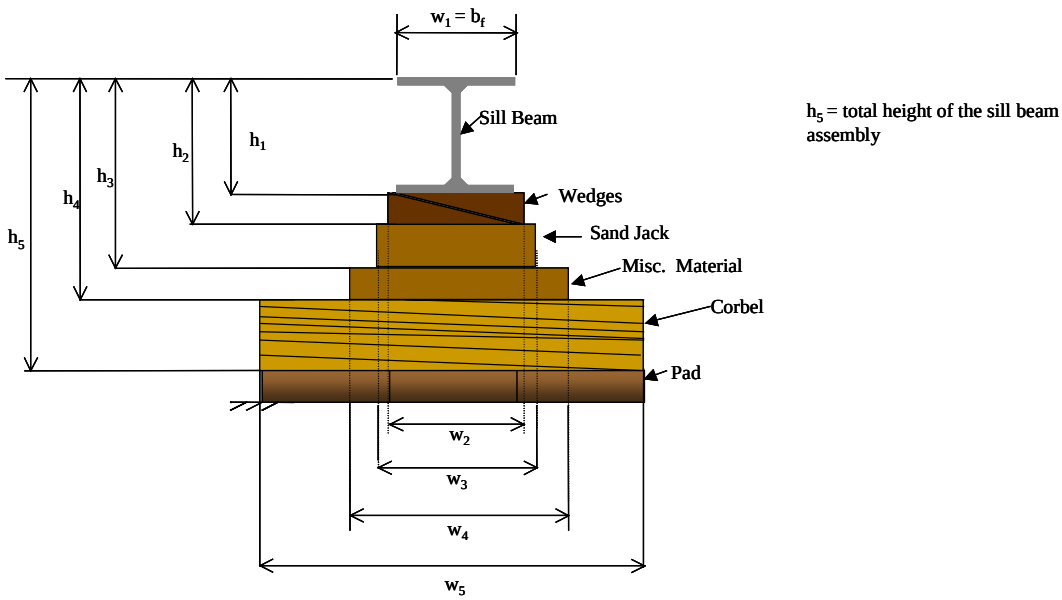


Stability Requirement (Overturning direction perpendicular to the falsework bent)

$$h_i \leq 2w_i \quad (w_i \geq w_{(i-1)} \geq b_f)$$

Figure 5-5

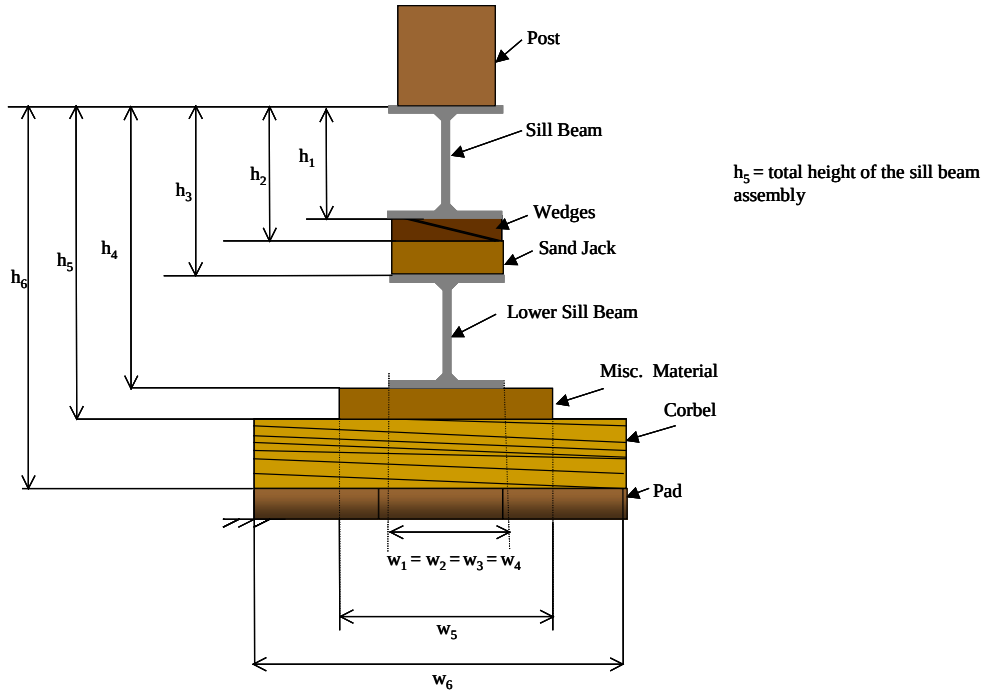


Stability Requirement (Overturning direction perpendicular to the falsework bent)

$$h_i \leq 2w_i \quad (w_i \geq w_{(i-1)} \geq b_f)$$

Figure 5-6

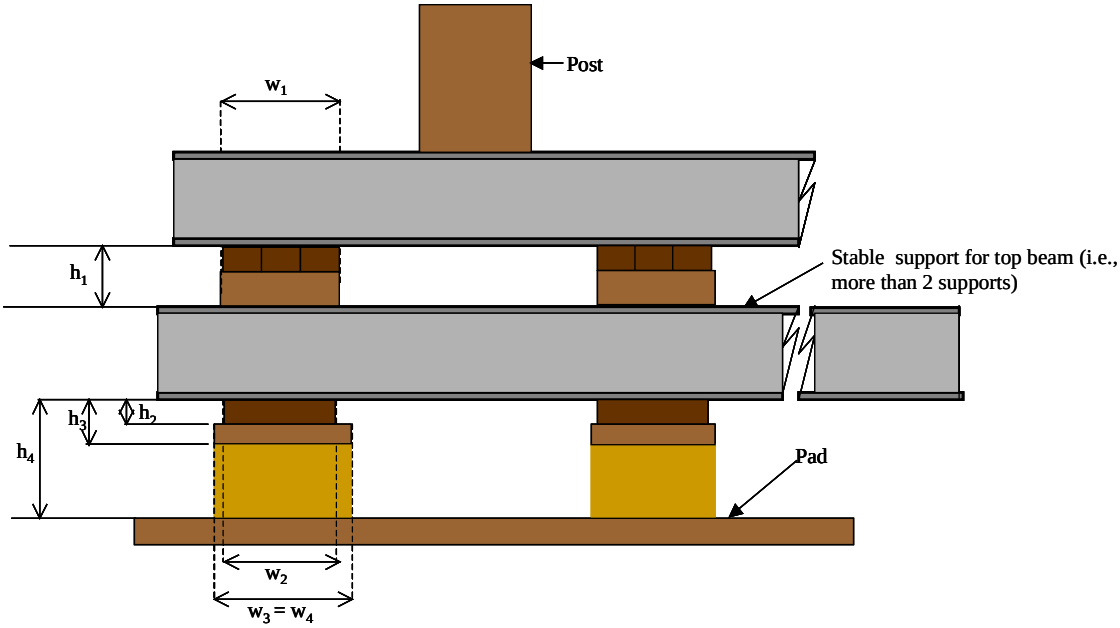


Stability Requirement (Overturning direction parallel to the falsework bent)

$$h_i \leq 2w_i$$

Figure 5-7

## 5 – 1.08 Combining Stresses

As noted elsewhere in this manual, stresses produced by the simultaneous application of horizontal and vertical forces need be combined only in those situations where bending must be considered to prevent overstressing of an axially-loaded member of the falsework system. Examples of such situations will include pile bents over water where the bracing extends only to the water surface and multi-tiered frame bents where the bracing system, although adequate to resist the collapsing force, does not fully support the vertical members in the bent and/or cannot prevent side sway.

The ability of a falsework member to resist the combined effect of bending and axial compression is evaluated by the combined stress expression. The combined *stress* expression, or interaction formula as it is sometimes called, establishes a limiting relationship between bending and compressive stresses such that the sum of the actual/allowable ratios of the two stresses may not exceed 1. In formula form the combined stress expression is:

$$f_b/F_b + f_c/F_c \leq 1$$

Where $f_b$ and $f_c$ are the calculated bending and compressive stresses, respectively, and $F_b$ and $F_c$ are the allowable values for bending and axial compression as listed in the specifications.

The combined stress expression may be used to determine the adequacy of falsework members to resist bending and axial compression in all cases except driven timber piles. Timber piles should be evaluated in accordance with the procedures discussed in Chapter 7.

# CHAPTER 6. STEEL SHORING SYSTEMS

## 6-1.01 Introduction

As used in this manual, the term "steel shoring system" describes falsework consisting of individual components which may be assembled and erected in place to form a series of internally-braced steel towers of any desired height. The tower legs, either directly or through a cap system, support the main load-carrying members.

From a design standpoint, shoring "towers" are indeterminate space frames; consequently, they cannot be analyzed by the general formulas applicable to statically determinate framed structures. Instead, determining the ability of steel shoring to safely carry a given load involves the use of empirical criteria developed from a consideration of the effect of such factors as tower height, differential leg loading, sidesway and method of external support.

Depending on load-carrying capacity, steel shoring systems are classified as pipe-frame systems, intermediate strength systems and heavy-duty systems. This chapter discusses the criteria and procedures to be followed when reviewing steel shoring systems for compliance with the falsework specifications.

## 6-1.02 Safe Working Loads

Steel shoring is a "manufactured assembly" within the meaning of this term as it is used in the specifications. Therefore, the maximum load to be carried-may not exceed the safe working load recommended by the manufacturer for any given loading condition.

Safe working loads for all shoring systems now in use have been determined empirically from full-scale load tests. In all cases of record, maximum values were obtained during tests in which the legs of the test tower were loaded uniformly and concentrically, the tower was supported on a concrete pad to ensure an unyielding foundation, and the top of the tower was externally braced to prevent appreciable lateral movement. Results of tests in which the towers were loaded eccentrically and/or lateral movement was allowed indicate a substantial reduction in capacity.

Shoring capacity as shown in catalogs or brochures published by the manufacturer should be considered as the maximum load which the shoring is able to safely support under ideal. loading conditions. These maximum values should be reduced

for adverse loading conditions often encountered in bridge falsework. For example, horizontal loads, eccentricity due to unbalanced spans or pouring sequence, and uneven foundation settlement are but a few of the loading conditions typical of bridge falsework which differ from the loading conditions upon which the manufacturer's ratings are based.

Finally, the maximum allowable safe working load as recommended by the manufacturer is based on the use of new material, or used material in good condition. If shoring components are not in good condition, the maximum allowable working load must be reduced by the contractor in accordance with contract requirements.

## 6-l-03 Pipe-Frame Shoring Systems

As the name implies, the various components which make up a pipe-frame shoring system are fabricated from sections of steel pipe of various diameters. The basic unit is the base frame, which consists of two vertical members; or legs; and connecting braces welded together to make a single, rigid unit.

Base frames, which are six feet in height, are erected in pairs and fastened together with pin-connected diagonal braces. Pairs of braced base frames are stacked one above the other to form the falsework towers. Typically, the towers are four feet wide (which is the width of a base frame) and eight feet long.

Two types of base frames are in general use. These are the ladder type and the cross-braced type. In the ladder type, frame rigidity is provided by horizontal struts between the vertical legs, whereas in the cross-braced type rigidity is enhanced by diagonal cross-bracing between the legs.

Extension frames are used with cross-braced base frames to extend the height of the tower, in one-foot adjustments, up to five feet. Extension frames, which are the same width as the base frames, may be used at either the top or the bottom of a tower. Minor height adjustments are accomplished with screw jack extensions at the top and bottom of each tower leg.

The height of ladder-type frames is adjusted in 4-inch increments up to five feet by means of a single-post extension staff at the top of each tower leg. Screw jacks are used at the bottom of the base frames for minor adjustments.

Pipe diameter is the same for both types, Typically, 2.375-inch pipe is used for the base frames and 1.90-inch pipe for extension frames and staffs.

## 6-l.03A Allowable Loads for Cross-Braced Frames

The load-carrying capacity of shoring constructed of cross-braced frames is governed by the strength of the frame legs. When loaded, the legs act as short, pin-connected columns having an unsupported length equal to the height of the frame plus the height of the screw jack.

The maximum allowable load per leg for pipe-frame shoring (cross-braced type) is limited by the height of the extension frame and the type of screw jack (swivel or fixed head) used at the top of the frame. If swivel-head screw jacks are used, maximum allowable leg loads are as shown in the following tabulation:

Maximum Allowable Leg Load in Pounds

| Extension frame height | 2'0" | 3’0” | 4'0" | 5'0" |
|---|---|---|---|---|
| Screw height 12" or less | 11000 | 11000 | 10000 | 9400 |
| Screw height exceeds 12" | 8200 | 8200 | 8000 | 7800 |

If fixed-head screw jacks are used at the top of the extension frame, the allowable load per leg will be 11,000 pounds for all extension frame heights up to five feet for screw jack height of 12 inches or less. No increase will be permitted in the tabulated values when screw jack height exceeds 12 inches, regardless of the type of jack used.

Extension frames must be braced. Side cross-braces are required for extension heights up to 2'O". Both side and end cross-braces are required for 3'0" to 5'0" extension heights.

The allowable design loads are va1id only if the materials are in good condition, and only if the shoring is properly braced and erected in accordance with the manufacturer's recommendations and the criteria set forth in Section 6-l.03C, Analysis of Pipe-Frame Shoring Systems.

## 6-l.03B Allowable Loads for Ladder-Type Frames

The load-carrying capacity of shoring constructed of ladder-type frames may be governed by the height of the tower or, if used, by the height of the extension staff.

Because of its substantially lower load-carrying capacity, shoring constructed with ladder-type frames is not practical for use as bridge falsework, If it should be encountered, the maximum allowable design load will be limited by Division of Structures policy to the following values, regardless of any conflicting information which may be found in manufacturer's catalogs or brochures:

If the shoring system consists of a single tier of braced base frames, leg loads shall not exceed 10,000 pounds.

If the shoring system consists of two or three tiers of base frames, leg loads shall not exceed 7,500 pounds.

If an extension staff is used, the maximum allowable leg load shall be reduced to 6,000 pounds.

Maximum allowable leg loads as set forth above will apply when fixed-head screw jacks are used, or when swivel-head jacks are used at either the top or the bottom of the tower. Screw jack extension is limited to 12 inches. The use of swivel-head *screw* jacks at both-top and bottom of ladder-type frames is not permitted.

For any combination of base frames or base frames with staff extension, the total height of the shoring shall not exceed 20 feet overall, including screw jack extensions.

6-1.03C Analysis of Pipe-Frame Shoring Systems

The use of pipe-frame shoring as bridge falsework must conform to the criteria set forth in this section. Review procedure is as follows:

1. Investigate Tower Leg Loads

Tower leg loads should not exceed the limiting values under any loading condition *or* sequence. As previously noted, these values are based on the use of new material, or material in good used condition.

The maximum load on one leg of a frame should not exceed four times the load on the other leg under any given loading condition or sequence.

The maximum load on one of the two frames making up a tower should not exceed four times the load on the opposite frame under any given loading condition or sequence.

2. Determine Supplemental Bracing Requirements *

In the transverse direction (the direction parallel to the frame) no supplemental bracing is required for tower. heights of 20 feet or less. For heights exceeding 20 feet, the individual towers making up the shoring system cannot resist the combined effect of both vertical and horizontal loads without overstressing the tower components unless supplemental bracing is provided. Therefore, when the shoring height reaches four frames, including an extension frame if used, one horizontal brace and one diagonal brace must be attached to each tower face, for every three frames of shoring height. The lowest horizontal brace should be located near the top of the third tower frame, and any additional horizontal braces spaced no farther than three frames apart. The diagonal braces should be located on opposite tower faces, and should run in opposite directions.

When superelevation exceeds six percent, a transverse brace shall be attached to one tower face of the top frame. This brace shall be in addition to bracing required by the preceding paragraph.

In the longitudinal direction, no bracing is required when shoring height is less than six frames. When shoring height is six frames or more, a horizontal brace is required on one face of each tower, with the lowest brace located no higher than the fourth frame and any additional braces spaced no farther than four frames apart.

Supplemental bracing, when required by the criteria set forth herein, must be shown on the falsework drawings. Design details, Including the method and exact location of the connecting devices, must be in accordance with the manufacturer's recommendations.

**3.** Investigate System Stability

When continuous caps or joists are used, pipe-frame shoring will be considered as capable of resisting all horizontal forces, including wind, provided the shoring

---

* Supplemental bracing requirements apply only to pipe-frame shoring systems with cross-braced base frames because, as previously noted, the height of shoring constructed with ladder-type frames is limited to 20 feet.

is property braced in accordance with the criteria set forth in the preceding paragraphs, and provided the shoring system is stable against overturning. As used herein, the term "shoring system" means the full width of the properly-braced falsework supporting continuous caps or joists.

If the height-to-width ratio of the shoring system, as defined above, is 1.0 or less, the system will be considered as stable against overturning and further analysis will not be required.

If the height-to-width exceeds 1.0, overturning stability should be investigated. For analysis, the resisting moment will be assumed as acting about the downwind edge of the system. If the resisting moment of the system exceeds the overturning moment, the falsework is stable against overturning. If the resisting moment is less than the overturning moment, the difference must be resisted by cable guys or other means of external support. (See Section 5-1.05, Overturning.)

4. Investigate Foundation Support

The specifications do not include any express provisions governing the design of foundations for pipe-frame shoring; however, the method of foundation support is part of the falsework design and should receive the same consideration as the foundation for a conventional falsework system.

## 6-1.04 Intermediate Strength Shoring

Steel shoring consisting of cross-braced tubular members capable of carrying 25 kips per tower leg with a 2-l/2 to 1 safety factor is marketed commercially as "WACO SHORE 'X' 25K" vertical shoring.

This shoring system has had only limited use in California. In concept and design it is similar to the cross-braced pipe-frame shoring system described in the preceding section; however the individual components are larger.

The use of the Shore "X" 25-kip system will be governed by the following conditions and limitations:

1. The maximum load carrying capacity of 25 kips per leg is based on the use of fixed head screw jacks at the top and bottom of the towers. If swivel-head screw

jacks are used at either the top or bottom of the tower, the maximum load must be reduced to 20 kips per tower leg.

2. Maximum screw-jack adjustment may not exceed 14 inches.

3. Extension frames must be braced. Side cross-braces are required for all extension-frame heights. In addition, end cross-braces (braces across the face of the extension frame) are required for extension frame heights of 3'0" or more.

4. The maximum load on one leg of a frame, or on one frame of a tower, should not exceed four times the load on the opposite leg or frame under any given loading condition or sequence.

5. When tower height reaches four frames, including an extension frame if used, supplemental bracing must be provided in accordance with the criteria in Section 6-1.03C. Analysis of Pipe-Frame Shoring Systems, except that no supplemental bracing will be required in the longitudinal direction.

6. When investigating system stability, follow the procedure in Section 6-l.O3C, Analysis of Pipe-Frame Shoring Systems.

The use of WACO 25-kip shoring, when designed and erected in conformance with the criteria set forth above, is authorized for tower heights up to 37'-4", which is five frames plus a fully-extended extension frame plus the maximum allowable screw-jack adjustment. For any proposed use exceeding this limiting height, the contractor must furnish a statement signed by the shoring manufacturer covering the specific installation. The statement must expressly provide that the shoring will carry the loads to be imposed without over-stressing any shoring component or reducing the required safety factor. Note that the statement is a condition of approval of the falsework design. If the contractor cannot or does not furnish the statement, the falsework drawings will not be approved.

The method of foundation-support is relatively more important for intermediate strength shoring than for pipe-frame shoring because the leg loads are considerably higher. Accordingly, the foundation design should be scrutinized to ensure that the vertical loads are uniformly distributed and differential settlements are minimized.

## 6-1.05 Heavy-Duty Shoring Systems

Heavy-duty shoring is capable of carrying up to 100 kips per tower leg. Two systems are in general use in California. These are the WACO and PAFCO Shoring Systems, both of which are designed and manufactured to carry a 100-kip leg load with a 2-l/2 to 1 safety factor.

The criteria for review of heavy-duty steel shoring, as set forth in this manual, were developed by the Division of Structures from a subjective evaluation of manufacturer's published test data together with an analysis of mathematical models of both the WACO and PAFCO towers. Accordingly, the criteria will apply only to the WACO and PAFCO Systems. Should some other type of heavy-duty shoring be proposed for use, the engineer should consult with bridge Headquarters *for* the review procedure to be followed.

Review of the falsework design to verify contract compliance will be based on the criteria in the following section, except that designs based on alternative criteria may be approved provided the contractor furnishes a written statement from the shoring manufacturer coveting said alternative criteria. The statement must refer to the specific project on which the alternative criteria will apply, must set forth the conditions under which the particular alternative criteria may be followed, and must expressly provide that a design based on the alternative criteria will not overstress any shoring component nor reduce the required safety factor.

Finally, when reviewing heavy-duty shoring designs, keep in mind that the criteria set forth in the following section are based on the assumed use of a propriatory shoring system which, during its lifetime, has not been altered or modified in any way. This is an important point, because both WACO and PAFCO shoring in which components have been modified to fit a particular job situation is known to exist. Such modified shoring, if used on a California contract, would have been covered by a manufacturer's statement certifying the modification and use. Once modified, however, any subsequent use must be covered by a new statement certifying that the modified shoring will carry the actual loads to be imposed without overstressing any tower component or reducing the required safety factor.

### 6-1.O5A Review Criteria

If tower legs, including an extension unit if used, are utilized as single-post shores braced in one direction only, the shores should be analyzed as individual steel columns.

## STEEL SHORING SYSTEMS

Since the unsupported column length will be the total height of the shore, measured from bottom of base plate to cap, the computed allowable load (based on the column formula) may be substantially less than the safe working load recommended by the manufacturer,

If the total height of the shoring does not exceed the height of a single tower unit, including an extension unit if used, and if both the base and extension units are fully braced in both directions in accordance with the manufacturer's recommendations, individual tower legs may be considered as capable of carrying the safe working load recommended by the manufacturer without regard to the load on adjacent legs.

If the shoring system consists of two *or* more units stacked one above the other, either with or without an extension unit, the differential leg loading within a given tower unit should not exceed the following limitation:

| Maximum load on any leg in the tower unit | Maximum to minimum load ratio |
|---|---|
| 10 kips or less | 10 to 1 |
| 11 kips to 50 kips | 6 to 1 |
| 51 kips to 75 kips | 5 to 1 |
| 76 kips *or* more | 4 to 1 |

In any case where the actual loading condition during any construction stage will produce a differential leg loading in excess of the ratio shown, the contractor must furnish documentation that the actual loads are in accordance with the shoring manufacturer's recommendations. The documentation must be in the form of a written a statement by the manufacturer covering the specific installation, and must expressly provide that the towers will withstand the actual loading differential without overstressing any tower component or reducing the required safety factor. In the absence of such supporting documentation, the falsework drawings will not be approved.

Steel beams used as continuous caps over two or more tower units require a complete stress analysis to determine the effect of continuity on tower leg loads. In many cases, and particularly where large skews are involved, the falsework stringers will not be supported directly over a tower leg; consequently, both positive and negative bending moments will occur in the cap. Resulting moment shear must be added to *or* subtracted from the simple beam reaction to obtain the actual leg load, and this may produce-a significant load differential. Also, do not overlook the effect of differential leg loads, and the resulting differential settlement, on actual unit stresses in the cap itself.

The use of "double legs" in which lateral support of the supplemental leg is provided by the main tower leg rather than independent bracing will be permitted with no reduction in tower load-carrying capacity, provided the proposed double-leg configuration is shown in the manufacturer's catalog or technical data furnished by the contractor. However, the use of "triple legs" will not be approved unless the contractor furnishes a statement from the manufacturer covering the specific installation. The statement must expressly provide that the use of supplemental legs will not overstress any tower component, nor reduce the required safety factor.

In any case where the maximum leg load within a given tower exceeds 30 kips, the specifications require the tower foundation to be designed and constructed to provide uniform settlement under all legs of the tower under all loading conditions. This requirement is included in the specifications to prevent distortion of the tower components as a consequence of unequal leg settlement.

The method of foundation support must be shown on the falsework drawings in sufficient detail to permit a stress analysis. When reviewing the foundation design, keep in mind that timber pads or cribbing, while generally adequate for conventional falsework construction, may not ensure uniform settlement under the heavier loads carried by heavy-duty shoring systems. When asked, tower manufacturers will generally recommend concrete to ensure an unyielding foundation. Under adverse foundation conditions, CIDH piles may provide the most economical solution.

The effect of unequal leg settlement becomes increasingly severe as leg loads increases, consequently, the tower foundation design, including the method employed to ensure uniform settlement, is relatively more important when leg loads are high.

In the case of high falsework, differential leg shortening may be an important consideration and should be investigated. Note that differential leg shortening (which will occur under a differential leg load condition) has the same effect on a continuous cap as differential leg settlement, and will result in a further distribution of vertical forces.

The adverse effect of lateral movement at the top of a tower (sidesway) on total load-carrying capacity is not subject to precise analysis, as the calculations involved are highly indeterminate. In theory, both the PAFCO and WACO 100-kip shoring systems in use today can tolerate some sidesway without overstressing the tower components; however, the amount of

acceptable movement depends on total tower load, tower height and other variable factors so that limiting values become difficult to establish.

In view of this, it is Division of Structures policy to require heavy-duty shoring to be cable-guyed or otherwise externally supported at the top unless the towers are stable against overturning as defined in Section 5-1.O5A, Calculation of Resisting Moments. Division policy further provides that falsework towers which are stable against overturning, or which are externally braced *or* cable-guyed to prevent overturning, will be considered as stable against internal collapse as well. This approach, while not academically exact, is conservative and will greatly facilitate analysis.

The total resisting moment of a falsework bent composed of two or more towers having a common *or* continuous cap will be assumed as equal to the sum of the resisting moments of the individual towers. In such cases the cap will be considered as capable of distributing horizontal forces- equally between towers, but not capable of-applying moment to a tower.

In a multiple-tower bent where a continuous cap is not used, each tower must be independently braced to resist the horizontal load applied to that tower because the supported falsework above the towers is not capable of transferring horizontal forces.

When investigating the stability of a multiple-tower bent, any advantage gained from the theoretical transfer of the point of application of the vertical forces as the towers start to tip will be neglected.

When designing external bracing, including cable bracing, particular attention must be given to the method by which the bracing is connected to the falsework. Connections must be designed to transfer horizontal and vertical forces from the falsework to the bracing system without overstressing any tower component.

The importance of adequate external bracing, when external bracing is required to ensure the stability of a falsework tower, cannot be over-emphasized. The bracing system, including all construction details, must be shown on the falsework drawings, and should be reviewed for compliance with contract requirements in the same manner as all other components of the falsework system.

# CHAPTER 7. FALSEWORK FOUNDATIONS

## Section 7-1 Introduction

This chapter discusses the methods and procedures used by the Division of Structures to evaluate the adequacy of falsework pad and pile foundations. Also included is a brief discussion of other foundation systems occasionally encountered on bridge projects in California.

To an extent, the Division's procedures are approximations, having been developed from a subjective evaluation of the actual manner in which falsework pads and piles react when loads are applied. Although empirical in some cases, the procedures give results that are acceptable in the light of falsework requirements. To ensure uniformity, the Division's procedures are to be followed by bridge field personnel in all cases when reviewing the contractor's falsework design for structural adequacy and compliance with contract requirements.

From an administrative standpoint, the elements of the falsework system comprising the foundation differ from other elements of the system in one important aspect. The specifications permit the contractor to place falsework pads and drive falsework piles before the falsework design has been reviewed and the drawings approved. Division policy requires pad placement and pile driving to be inspected, to the extent necessary to ensure adequate foundation support, at the time the work is done. Any inconsistencies and differences between the falsework drawings and the work being performed in the field should be brought to the contractor's attention immediately.

## Section 7-2 Timber Pads

### 7-2. 0l Genera1

Falsework posts may be supported by individual pads, which may be square or rectangular, or several posts may be supported by a continuous pad. Additionally, a falsework pad may consist of a single member or of several members set side-by-side.

Corbels are short beams which are used to distribute the post load across the top of the individual pads in a multiple pad system. In a typical timber system the corbel will be a timber member of the same dimensions as the post it supports; however, steel wide-flange beams are often used as corbels when the post load is relatively high or in any case where steel posts or pipe columns ace used to carry the vertical load. Additionally, when the vertical design load is very high, as is often the case for a falsework bent adjacent to a wide traffic opening, it is often necessary to use two or more closely spaced corbels to adequately distribute the load over the falsework pad.

As a general design procedure, a falsework pad may be viewed as a cantilever beam extending from the face of the post or corbel. With the beam loaded uniformly with the soil pressure, bending and shear stresses may be calculated. Keep in mind, however, that this approach will not give exact values because the assumed uniform load distribution does not occur in actual practice.

To facilitate analysis of timber pad systems, the Division of. Structures has developed an empirical procedure which provides sufficient pad rigidity to assure a reasonably uniform load distribution. The Division's procedure is explained in the following sections, and illustrated in several example problems in Appendix D.

---

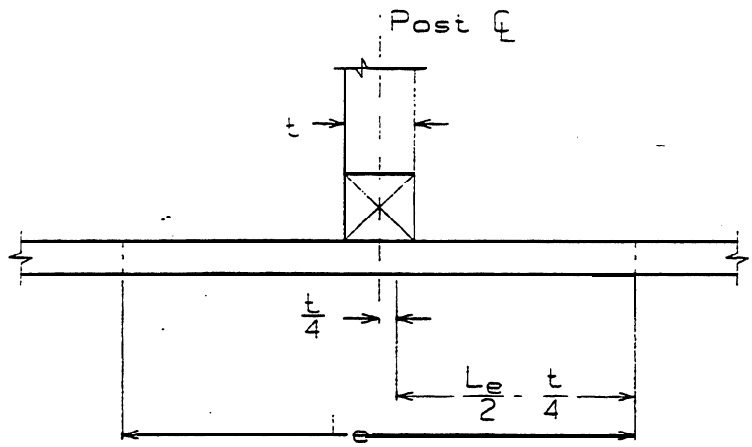


**Formula for $F_b$ = 1500 psi (pad thickness 8 inches or less)**

$$L_e = \frac{1}{6}\left[\left(\frac{3t + 36S/P}{12}\right) + \sqrt{\left(\frac{3t + 36S/P}{12}\right)^2 - \frac{t^2}{16}}\right]$$

**Formula for $F_b$ = 1800 psi (pad thickness greater than 8 inches)**

$$L_e = \frac{1}{6}\left[\left(\frac{3t + 43.202S/P}{12}\right) + \sqrt{\left(\frac{3t + 43.202S/P}{12}\right)^2 - \frac{t^2}{16}}\right]$$

In the formulas, $L_e$ is the theoretical effective length of the pad in feet, t is the post width in inches, S is the pad section modulus in inches cubed, and P is the post load in kips.

FIGURE 7-l

## 7-2.02 Definitions

The term "theoretical effective length" means the maximum length over which a falsework pad is capable of distributing the post load uniformly, all other factors being equal.

The term "limiting length" means the length over which a specific falsework pad will actually distribute the post load uniformly at the post location under consideration.

## 7-2.03 Analysis of Continuous Pad Systems

In a continuous pad system where the posts are uniformly spaced, the theoretical effective length of the pad is equal to the post width plus twice the length of a cantilever extending from the face of the post or corbel a distance such that the calculated bending stress in the pad equals the allowable stress.

Figure 7-1 shows the formulas that are used to calculate the theoretical effective length at an interior post when the post spacing is uniform along the pad. Note that the theoretical effective length is measured along the pad in the direction of the wood grain, the cantilever length is measured from a point midway between the center and edge of the falsework post, and the effective length formulas are derived by applying the soil pressure load uniformly.

The two formulas shown in Figure 7-l are derived from quadratic equations, and their use requires a cumbersome calculation. To expedite the falsework design review, the Division has developed a simplified formula that may be used for the symmetrical loading condition that occurs when the post spacing is uniform. The simplified formula gives results that are accurate within one percent for the range of post loads and member sizes commonly used for falsework construction in California. For descriptive purposes, the simplified formula is designated the "SYM" formula. The SYM formula is:

$$L_{SYM} = t/12 + F_b S/1500P$$

where $L_{SYM}$ is the theoretical effective length in feet; t is the width of the post or corbel in inches; $F_b$ is the allowable bending stress in psi; S is the pad section modulus in inches cubed; and P is the post load in kips.

When the allowable bending stress value is substituted for $F_b$, the formula reduces to:

$$L_{SYM} = t/12 + S/P \quad \text{(when } F_b = 1500 \text{ psi)}$$

$$L_{SYM} = t/12 + (1.2)(S/P) \quad \text{(when } F_b = 1800 \text{ psi)}$$

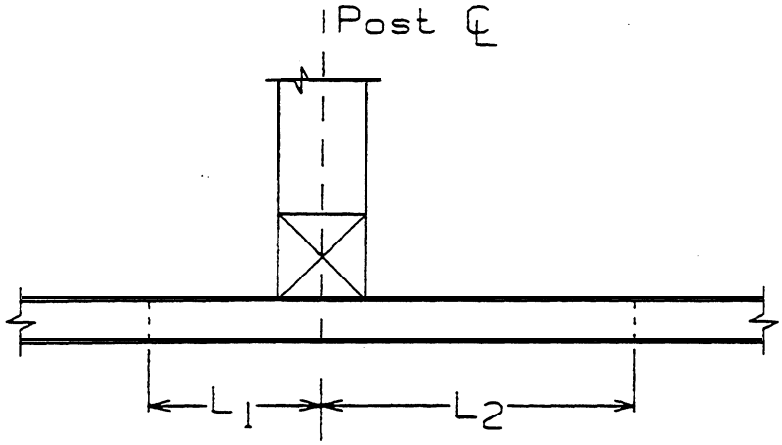


**FIGURE 7-2**

---

When the post spacing is not uniform, the pad is asymmetrical for analysis. For the asymmetrical condition, the limiting length of the pad on one side of a post will not equal the limiting length on the opposite side, and the two respective lengths must be determined independently. Furthermore, the calculations are complicated by the fact that it has not been possible to develop a simplified formula for the asymmetrical loading condition.

Refer to the asymmetrical load shown in Figure 7-2 and note the following:

$L_1$ is the limiting length on the short side, in feet.

> $L_2$ may not exceed the smaller of (1) one-half of the post spacing on the short side, or (2) one-half of the length determined by the SYM formula.

$L_2$ is the limiting length on the long side, if feet.

> $L_2$ may not exceed the smaller of (1) one-half of the post spacing on the long side, or (2) the length given by the long side effective length formula for the asymmetrical loading condition. For identification, this formula is designated the "ASYM" formula, The ASYM formula is:

$$L_{ASYM} = \frac{1}{2}\left(\frac{t}{24} + \frac{SF_b}{6000P}\right) + \sqrt{\frac{SF_bL_1}{6000P} - \frac{(t/12)^2}{16} + \left[\frac{1}{2}\left(\frac{t}{24} + \frac{SF_b}{6000P}\right)\right]^2}$$

It is important to note that the length given by both the SYM and the ASYM formulas is the pad length at which the actual bending stress i&the pad equals the allowable bending stress. Since the formulas are based on bending, it is not necessary to calculate the bending stress when evaluating system adequacy because, for a

given post load, any pad length less than the length given by the formulas will produce a bending stress that is less than the allowable stress.

For the asymmetrical loading condition, pad bearing length, soil pressure and the horizontal shear in the pad on the long side are given by the following formulas:

$$\text{Bearing length (feet)} = L_1 + L_2$$

$$\text{Soil pressure (psf)} = \frac{(1000)(P)}{(L_1 + L_2)(b/12)}$$

$$\text{Horiz. shear (psi)} = \frac{3}{2} \times \frac{(1000)(P)}{L_1 + L_2} \times \frac{L_2 - t/24 - d/12}{(b)(d)}$$

In the preceding formulas, P is the post load in kips; S is the pad section modulus in inches cubed; $F_b$ is the allowable bending stress; t is the width of the post or corbel in inches; b is the pad width in inches; and d is the pad thickness in inches.

7-2.03A Pad Analysis at Interior Posts

Figure 7-3 shows a falsework bent where the post spacing is uniform along a continuous pad and the post load is distributed across the pad by a single corbel. In the figure, "PS" is the post spacing (and also the corbel spacing) and "$L_e$" is the theoretical effective length given by the SYM formula.

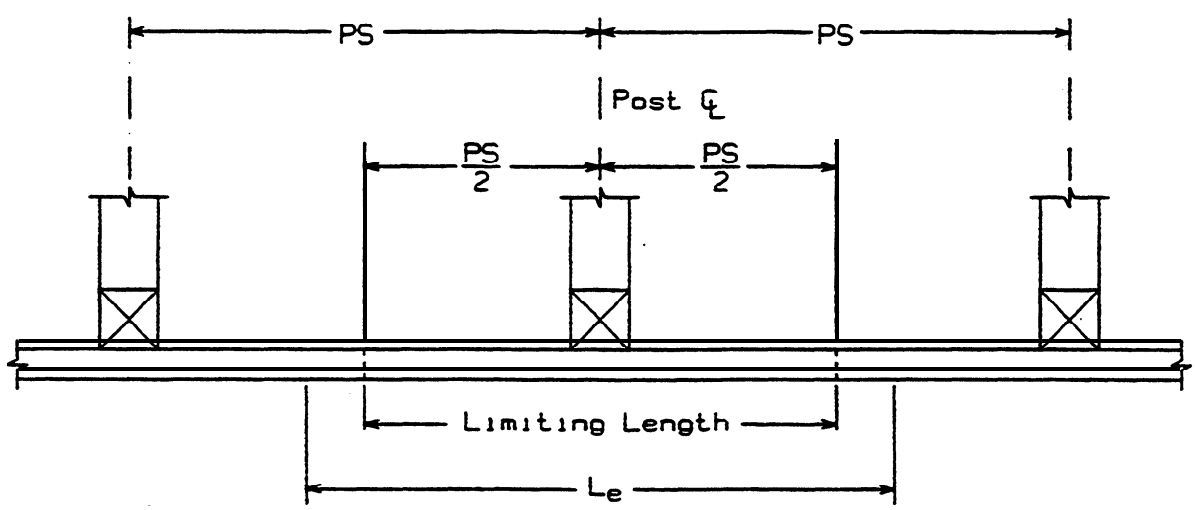


FIGURE 7-3

When the post spacing is uniform, the bearing length is symmetrical. System adequacy is evaluated as follows:

1. For a given post, calculate the theoretical effective length of the pad using the SYM formula.

2. Compare the length from step 1 and the post spacing. The shorter of these two lengths is the limiting length, or the length to be used in the analysis.

   The bearing length in the Figure 7-3 example is determined by post spacing. In general, this will be the case for falsework bents on California projects, However, when relatively light members are used as pads, post spacing may not be the determining factor; therefore, the step 2 comparison must be made in all cases.

3. Using the post spacing (or the effective length if the effective length governs) calculate the soil pressure.

4. If the soil pressure does not exceed the allowable soil bearing value, calculate the stress due to horizontal shear. For this calculation, consider the pad as a continuous beam loaded uniformly with the soil pressure over a length equal to the bearing length determined by the step 2 comparison, and calculate the stress at a distance "d" from the face of the post or corbel where "d" is the pad thickness.[1]

When the post spacing is not uniform, the contribution to system adequacy made by the pad on one side of a post must be determined independently of the contribution made by the pad on the opposite side.

Refer to the system shown in Figure 7-4, System adequacy is evaluated as follows:

1. Use the SYM formula to calculate the theoretical effective length of the pad at the post under consideration.

2. Compare one-half of the length from step 1 and one-half of the post spacing to the left of the post. The shorter of these two lengths is the limiting length (the length that actually contributes to system adequacy) on the left side.

   In this example the left side comparison is made first because, for the post configuration shown in Figure 7-4, the post spacing to the left of the post is less than the spacing to the right:

---

[1] See Chapter 4, Section 4-2.05, Horizontal Shear, for a general discussion of horizontal shear in timber beams.

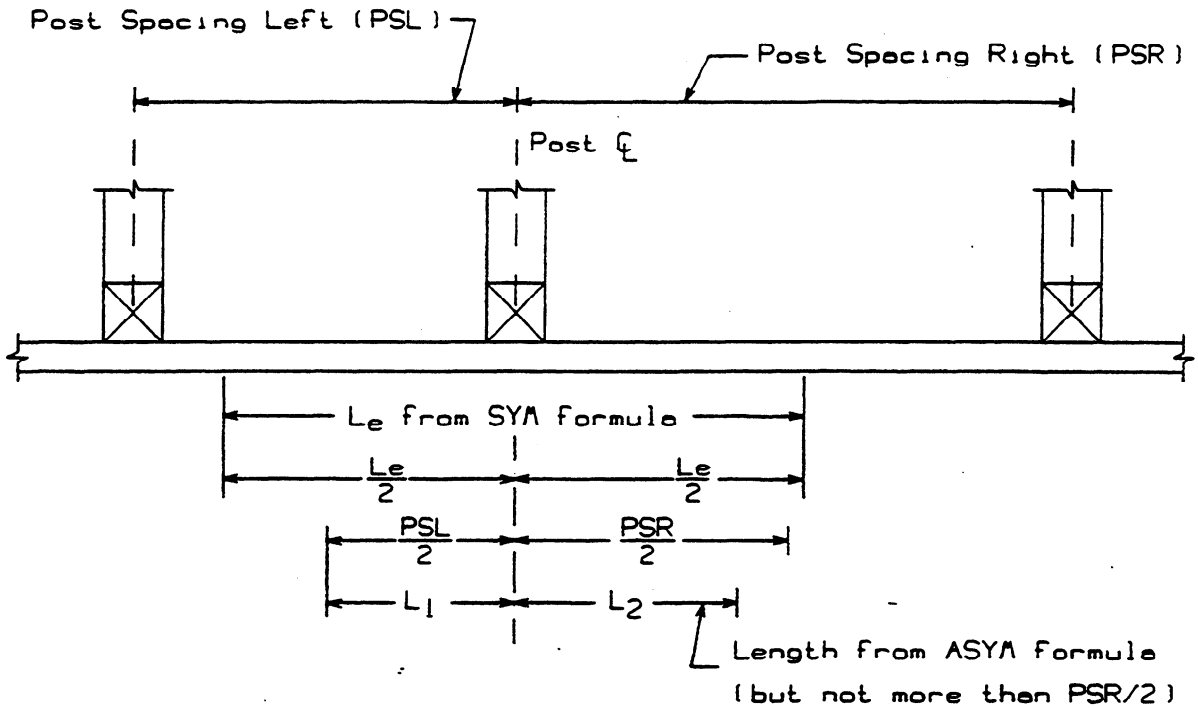


**FIGURE 7-4**

3 . If the limiting length on the short side of the post is one-half of the theoretical effective length as determined by the SYM formula, the bearing length is symmetrical for analysis. (Note that this is not the case in Figure 7-4.)

If the bearing length is symmetrical, calculate the soil pressure and the stress due to horizontal shear following the procedure explained above for the symmetrical analysis.

4 . If the limiting length on the short side **($L_1$)** is one-half of the post spacing, as shown in the Figure 7-4 example, the bearing length is asymmetrical.

For the asymmetrical analysis, calculate a new effective length on the long side using the ASYM formula. (The ASYM formula is shown on Page 7-4)

5 . Compare the long side effective length from step 4 and one-half of the post spacing on the long side. The shorter of these two lengths is the limiting length **($L_2$)** the long side. (The long side is the right side in Figure 7-4.)

6 . The sum of the limiting lengths found in steps 2 and 5 is the bearing length at the post under consideration.

3. Using the bearing length from step 6, calculate the soil pressure. If the soil pressure does not exceed the allowable soil bearing value, calculate the stress due to horizontal shear on the long side using the formula shown on Page 7-5.

7-2.03B Pad Analysis at Exterior Posts

For exterior posts, the contribution to system adequacy made by the length of pad on the outside of the post must be determined independently of the contribution made by the pad on the inside. [2]

Figure 7-5 shows the post configuration for an exterior post in a typical continuous pad system. System adequacy is evaluated as follows:

1. Use the SYM formula to calculate the theoretical effective length of the pad at the exterior post.

2 . Multiply the calculated length by a stiffness coefficient of 0.8 to obtain an adjusted effective length. (Note that this step is necessary because the pad length on the outside of an exterior post resists the applied loads in the same manner as an individual falsework pad. See the discussion in Section 7-2.04, Analysis of Individual Falsework Pads.)

3 . Determine the limiting length on the outside of the post by comparing one-half of the adjusted effective length and the distance from the center of the post to the end of the pad. The smaller of these two values is the limiting length **($L_1$)** on the outside of the post.

4 . Determine a preliminary limiting length on the inside of the post by comparing one-half of the theoretical effective length calculated in step 1 and one-half of the distance (post spacing) to the first interior post. The smaller of these two values is the preliminary limiting length on the inside of the post.

---

[2] For typica1 bent configurations and post spacing, the pad length on the inside of the post will be the long side for the analysis. Keep in mind, however, that the procedure for evaluating system adequacy as explained herein is also valid in any case where the long side length is on the outside.

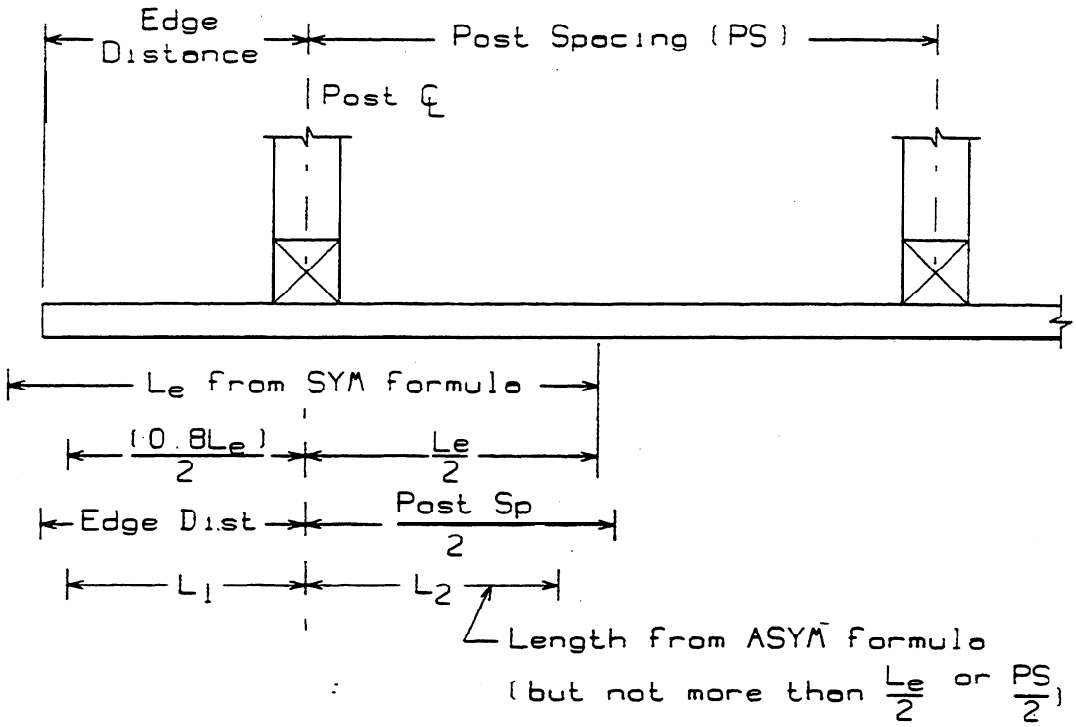


**FIGURE 7-5**

---

5 . If the step 3 and step 4 limiting lengths are equal, the bearing length is symmetrical and pad adequacy may be evaluated using the procedure for uniformly spaced interior posts. (But note that this is unlikely to occur in actual practice.)

6 . If the step 3 and step 4 lengths are unequal, the bearing length is asymmetrical. For the asymmetrical loading it is necessary to calculate the effective length of the pad on the inside of the post (the long side) using the ASYM formula.

Compare the length obtained from the ASYM formula and the preliminary limiting length from step 4. The shorter of these two lengths is the limiting length **($L_2$)** on the inside of the post.

7 . Add the limiting length on the outside and the limiting length on the inside to obtain the bearing length.

8 . Using the bearing length from step 7, calculate the. soil pressure and the stress due to horizontal shear in the pad on the long side using the formulas on Page 7-5.

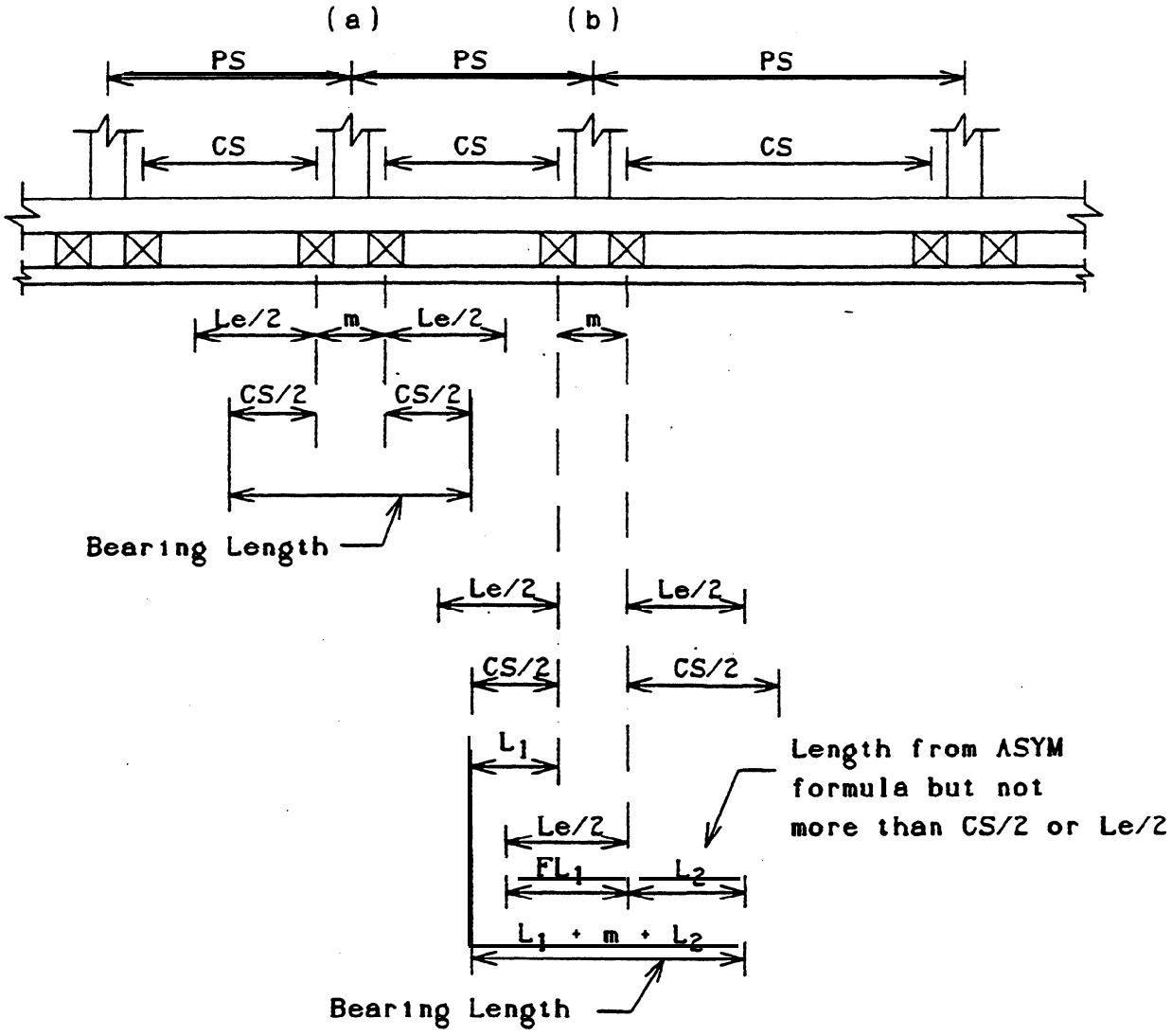
(a)
(b)
PS
PS
PS
CS
CS
CS
Le/2
m
Le/2
m
CS/2
CS/2
Bearing Length
Le/2
Le/2
CS/2
CS/2
L1
Length from ASYM formula but not more than CS/2 or Le/2
Le/2
FL1
L2
L1 + m + L2
Bearing Length

FIGURE 7-6

## 7-2.03C Multiple Corbel Systems

The term "post spacing" has been used in the preceding section to facilitate understanding of the Division's procedure for pad analysis in continuous pad systems. But as previously noted, when the falsework pad is made up of two or more individual members placed side-by-side, as is typically the case, corbel beams are used to distribute the post load uniformly across the top of the pad. As a design. concept, then, the limiting length determination actually involves consideration of the corbel spacing rather than the post spacing, even though in many cases the two distances are the same.

This distinction is not of any practical consequence when each post has its own individual corbel; however, when the vertical load is distributed to a continuous pad through a system of two or more closely spaced corbels, the procedure for evaluating pad adequacy for the asymmetrical loading condition as discussed in the preceding section gives limiting lengths that are shorter, and soil bearing values that are higher, than is actually the case. This circumstance occurs because, as the-corbel spacing approaches the corbel width, the pad distributes the total load as though it were actually imposed by a single corbel having a width along the pad of approximately the distance between the outside faces of the adjacent corbels.

In view of the manner in which falsework pads respond to loads applied by closely spaced corbels, the Division has developed an alternative procedure for evaluating pad adequacy in a multiple corbel system. The alternative procedure should be used when the clear distance between adjacent corbels is equal to or less than twice the thickness of the falsework pad.

### 7-2.03C(1) Multiple Corbel Analysis at Interior Posts

Figure 7-6 shows a typical multiple corbel system, When the post spacing is uniform, as is the case at post (a), bearing length is symmetrical and pad adequacy is evaluated as follows:

1 . Calculate the theoretical effective length of the falsework pad using the SYM formula. For this calculation, use the post load, not the load applied by the corbel.

   Note that it is necessary to use the post load because the pad responds to loads applied by a system of closely spaced corbels as though the loads were actually applied by a single corbel.

2 . Compare one-half of the length from step 1 ($L_e/2$) and one-half of the corbel spacing. (Corbel spacing is designated as "CS" in Figure 7-6.) The shorter of these two lengths is the limiting length on both sides of the system.

The limiting length at post (a) in Figure 7-6 is determined by the corbel spacing, and this is usually the case for falsework designs on California projects. However, if the pad is made up of relatively light members, corbel spacing may not be the determining factor; therefore, the step 2 comparison must be made in all cases.

3. Determine the bearing length. The bearing length is the sum of the limiting lengths on either side of the corbel system plus the distance between the corbel centerlines. (The distance between the corbel centerlines is designated as "m" in Figure 7-6.)

4. Calculate soil pressure and the stress due to horizontal shear.

Because of bearing length symmetry, the limiting lengths on each side of the system will be equal; consequently, the procedure may be simplified as follows:

1. Calculate the theoretical effective length of the pad using the SYM formula and the post load. Compare this length and the corbel spacing. The shorter of these two lengths plus the distance "m" is the bearing length.

2. Using the bearing length from step 1, calculate soil pressure and the stress due to horizontal shear.

When the system is asymmetrical, as is the case at post (b) in Figure 7-6, the procedure is as follows:

1. Calculate the theoretical effective length of the falsework pad using the SYM formula and the total post load.

2. Compare one-half of the length from step 1 and one-half of the corbel spacing on the short side of the system. The shorter of the two compared lengths is the limiting length on the short side. (In Figure 7-6, the short side is the left side and the limiting length is one-half of the corbel spacing to the left of the post.)

   If the limiting length on the short side is one-half of the theoretical effective length, the bearing length will be symmetrical for analysis. In such cases, pad adequacy may be evaluated by the procedure previously explained for the symmetrical loading condition. (As previously noted, however, this is not usually the case, and it is not the case in the Figure 7-6 example.)

3. If the limiting length on the short side is one-half of the corbel spacing, as is the case at post (b) in Figure 7-6, the bearing length is asymmetrical. For the asymmetrical condition it is necessary to calculate the effective pad

length on the long side using the ASYM formula and a fictitious limiting length on the short side. As shown in Figure 7-6, for descriptive purposes the fictitious limiting length is designated as $FL_1$.

$FL_1$ will be numerically equal to one-half of the effective length calculated in step 1 but not more than one-half of the corbel spacing on the short side plus the distance "m". (In the Figure 7-6 example $FL_1$ is equal to one-half of the effective length because this length is less than one-half of the corbel spacing on the short side plus "m".)

4. Calculate the theoretical effective length on the long side using the ASYM formula and $FL_1$ from step 3.

5. Compare one-half of the theoretical effective length from step 1, the long side effective length from step 4 and one-half of the corbel spacing on the long side. The shortest of these three lengths is the limiting length ($L_2$) on the long side. (In the Figure 7-6 example, $L_2$ is one-half of the theoretical effective length.)

6. Determine the bearing length. The bearing length is the sum of the short side limiting length from step 2, the long side limiting length from step 5, and the distance "m". See Figure 7-6.

7. Using the bearing length from step 6, calculate the soil pressure. If soil pressure does not exceed the allowable soil bearing value, calculate the stress due to horizontal shear in the long side of the pad.

The procedures described above for two corbel systems are also applicable when three (or more) corbels are used to distribute the vertical load. In such cases, the length "m" is the distance (measured centerline-to-centerline) between the two outermost corbels in the system.

In some cases the load from two (or more) posts will contribute to the total vertical load to be distributed through the corbel system. For this configuration, the total load applied to the system must be used to calculate the effective length of the pad.

7-2.03C(2) Multiple Corbel Analysis at Exterior Posts

Figure 7-7 shows a multiple corbel configuration at an exterior post. When the short side is on the outside of the post, as is the case in Figure 7-7, system adequacy is evaluated as follows:

1. Calculate the theoretical effective pad length-using the SYM formula and the post load.

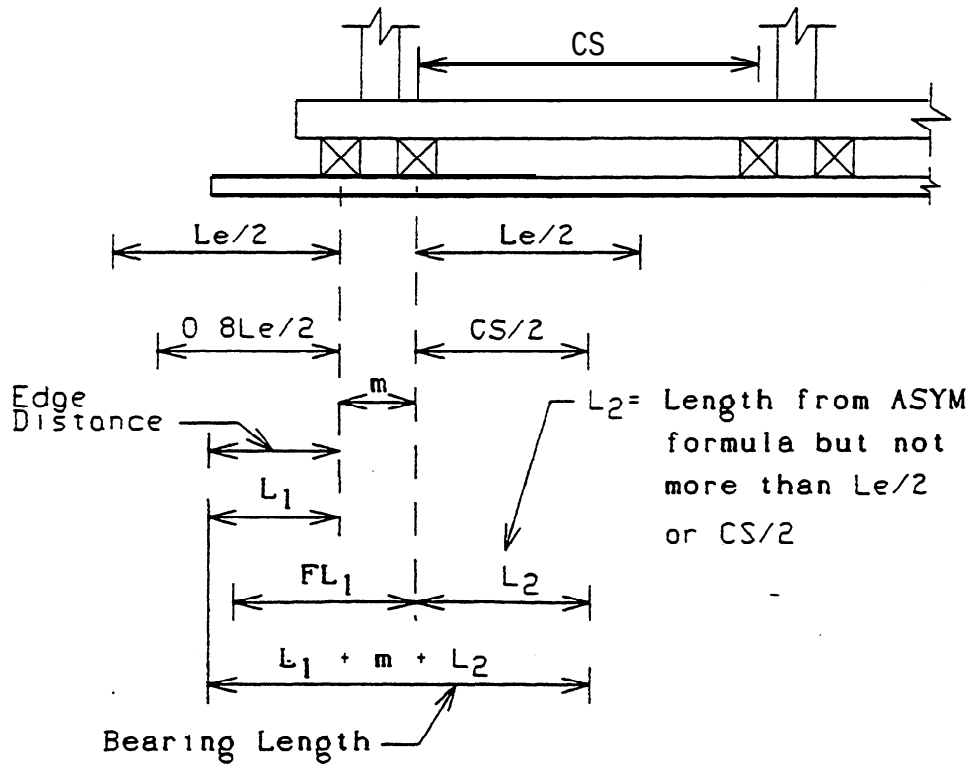


FIGURE 7-7

2 . Multiply one-half of the length from step 1 by a stiffness coefficient of 0.8 to obtain. an adjusted effective length of pad on the outside of the exterior post. (This step is. necessary because the pad on the outside of an exterior post resists the applied loads in the same manner as an individual falsework pad. See Section 7-2.04, Analysis of Individual Falsework Pads.)

3 . Determine the limiting length on the outside of the post by comparing the adjusted effective length from step 2 and the distance from the center of the outside corbel to the end of the pad, The smaller of these lengths is the limiting length **($L_1$)** on the outside of the exterior post system.

4 .Determine a preliminary limiting length on the inside of the post by comparing one-half of the theoretical effective length calculated in step 1 and one-half of the corbel spacing. The smaller of these lengths is the preliminary limiting length on the inside of the exterior-post.

5 . If the step 3 and step 4 limiting lengths are equal, the bearing length is symmetrical and pad adequacy may be evaluated by the procedure for uniformly spaced interior posts explained in the preceding section.

6 . If the step 3 and step 4 lengths are unequal, the bearing length is asymmetrical. For the asymmetrical condition it is necessary to calculate the effective pad length on the inside of the post (the long side) using the ASYM formula and a fictitious short side limiting length. (See $FL_1$ in Figure 7-7.)

$FL_1$ will be numerically equal to one-half of the adjusted effective length calculated in step 2, but not more than the outside edge distance plus the distance "m". (In the Figure 7-7 example, $FL_1$ is the numerical equivalent of one-half of the adjusted effective length.)

7. Calculate the theoretical effective length on the long side using the ASYM formula and $FL_1$ from step 6.

8 . Compare the long side effective length from step 7 and the preliminary limiting length from step 4. The shorter of these two lengths is the limiting length ($L_2$) on the inside of the post.

9. Determine the bearing length. The bearing length is the sum of the outside limiting length from step 3, the inside limiting length from step 8, and the distance "m". See Figure 7-7.

10. Using the bearing length from step 9, calculate the soil pressure. If soil pressure does not exceed the allowable soil bearing value, calculate the stress due to horizontal shear in the pad on the inside of the post,

The same general procedure applies when the short side is on the inside of an exterior post. For such cases the limiting lengths are determined as follows:

1 . The limiting length on the inside of the post ($L_1$) is the shorter of one-half of the effective length calculated by the SYM formula or one-half of the inside corbel spacing.

2 . The fictitious limiting length ($FL_1$) is one half-of the effective length calculated by the SYM formula, but not more than one-half of the corbel spacing plus "m".

3 . The limiting length on the outside of the post is the length calculated by the ASYM formula but not more than the shorter of the edge distance or one-half of the effective length multiplied by the stiffness coefficient.

## 7-2.04 Analysis of Individual Falsework Pads

**The SYM and ASYM formulas and the review procedures discussed in the preceding section were developed specifically for analysis of continuous pad systems. Because of the rigidity provided by beam continuity, continuous pads are stiffer members than individual pads of the same width and thickness; consequently, continuous pads have greater ability to distribute the post load uniformly, all other factors being equal.**

Application of the Division's review procedure to individual pads requires an accommodation to account for the greater rigidity inherent in continuous pad systems. This is accomplished by multiplying the length given by the SYM and ASYM formulas by a stiffness coefficient of 0.8 to obtain an adjusted (shorter) length to use in the individual pad analysis. Use of the stiffness coefficient gives an effective length that reflects the load distribution actually achieved by an individual pad, and thus assures that the procedures used to evaluate the adequacy of continuous and individual falsework pads are compatible.

In other respects, the procedures used to evaluate individual pads are similar to those used in the analysis of continuous pads, as discussed in the following sections.

### 7-2.04A Analysis of Symmetrical Pads

Figure 7-8 shows an individual falsework pad where the bearing length is symmetrical about the post centerline. For the symmetrical loading, pad adequacy is verified as follows:

1 . Calculate the theoretical effective length of the pad using the SYM formula.

2 . Multiply the theoretical effective length by the stiffness coefficient of 0.8 to obtain an adjusted effective length.

   The adjusted effective length may not exceed the actual pad length. Therefore, if the adjusted effective length is greater than the actual length, use the actual length in the remaining calculations. (See Figure 7-8.)

3 . Using the governing length (adjusted effective length or actual length) from step 2, calculate the soil pressure.

4 .If the soil pressure does not exceed the allowable soil bearing value, calculate the stress due to horizontal shear. For this calculation, consider the pad as a beam loaded uniformly with the soil pressure over the length determined in step 2.

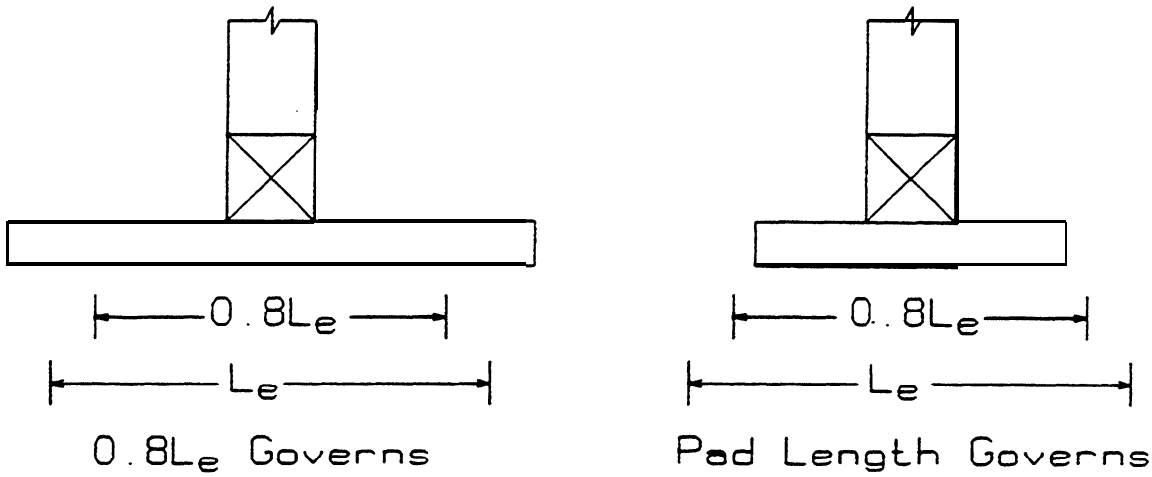


**FIGURE 7-8**

---

7-2.04B Analysis of Asymmetrical Pads

Refer to Figure 7-9 which shows a non-symmetrical loading. Pad adequacy is evaluated as follows:

1 . Calculate the theoretical effective length using the SYM formula. Multiply the calculated value by the stiffness coefficient (0.8) to obtain the adjusted effective length.

2 . Compare one-half of the adjusted effective length and the actual length of the pad cantilever on the short and long sides of the post. The shorter of the two compared lengths on each side of the post is the limiting length on that side. (See Figure 7-9)

3 .If the limiting length on the both sides of the post is one-half of the adjusted effective length, the bearing length is symmetrical. In such cases system adequacy may be evaluated by the procedure described in steps 3 and 4 for symmetrically loaded pads.

4 . When the limiting length on the short side is the pad length, as shown in the Figure 7-9 example, the bearing length is asymmetrical. For the asymmetrical loading condition, calcu1ate a new effective length on the long side using the ASYM formula.

5 . Multiply the length given by the ASYM formula by the stiffness coefficient (0.8) to obtain the limiting length on the long side.

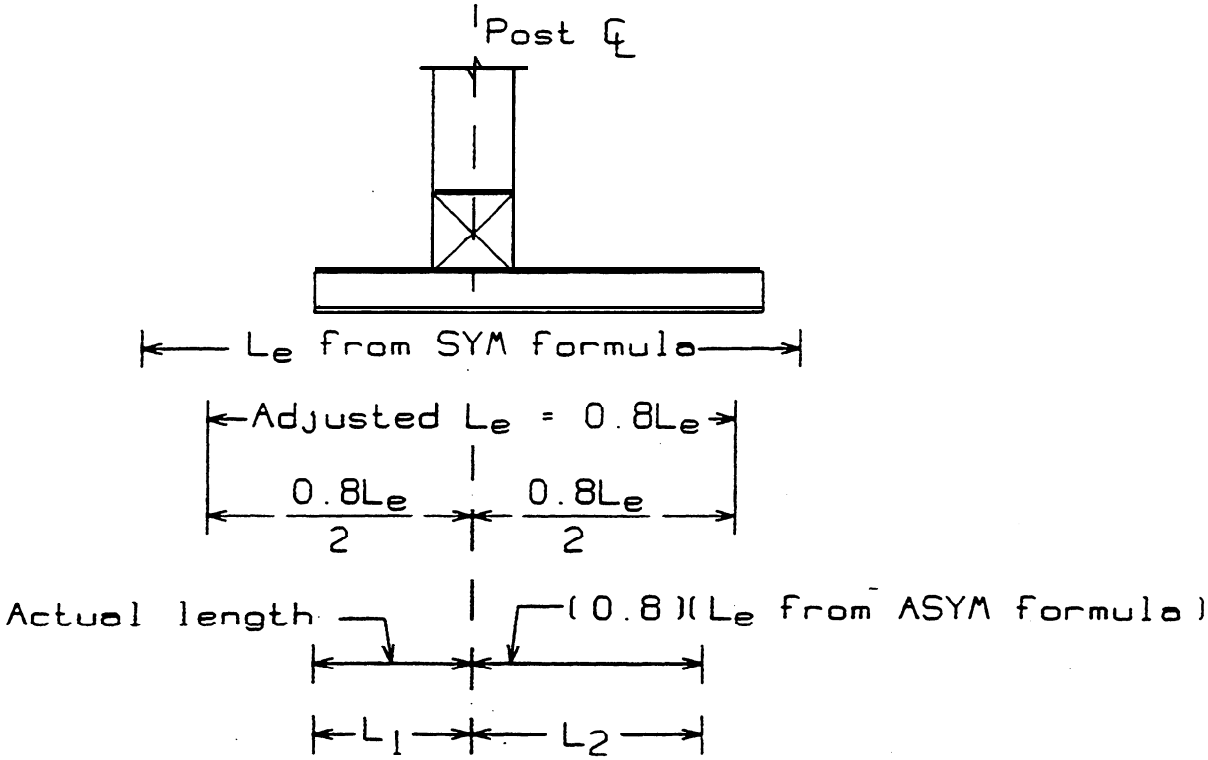


**FIGURE 7-9**

---

6. Add the short and long side limiting lengths **($L_1$ and $L_2$)** to obtain the bearing length. (In figure 7-9 **$L_1$** is the actual pad length and **$L_2$** is the adjusted effective length from the ASYM formula.)

7 . Using the bearing length from step 7, calculate the soil pressure. If the soil pressure does not exceed the allowable soil bearing value, calculate the stress due to horizontal shear in the pad on the long side using the formulas on page 7-5.

   For some asymmetrical loading configurations, the adjusted ASYM length **($L_2$)** will be <u>shorter</u> than the **$L_1$** length, in which case the stress due to horizontal shear will be calculated on the **$L_1$** side. (See Example Problem 1lB.)

<u>7-2.05 Joints and Joint Location in Continuous Pads</u>

To ensure the uniform load distribution assumed in the analysis, joints (that is, points of pad discontinuity) are not permitted within the limiting length of any continuous falsework pad, unless doubler pads or supplemental pads are provided.

If, because of the post spacing or other design consideration, joints must be located within the limiting length of a continuous pad, and if neither supplemental pads nor doubler pads are to be used, the interior posts adjacent to the joint must be viewed as exterior posts for analysis. If the falsework pad meets the exterior post criteria, the system is adequate at that location,

Joint location, because it directly affects the ability of a continuous pad to distribute the post load uniformly, is an important design consideration. Joint location must be planned in advance and shown on the falsework drawings, unless either doubler pads or one or more supplemental pads are to be used.

Any intended use of supplemental or doubler pads must be shown on the falsework drawings.

7-2.05A Supplemental Pads

To facilitate construction, some contractors intentionally over-design a continuous pad system by providing a greater overall pad width, and a correspondingly greater number of-individual pad members, than would be required by theoretical design considerations. The redundancy provided by the supplemental pads allows greater flexibility in joint location.

When supplemental pads are provided, joints may be located within the limiting length of a continuous pad system, subject to the following restrictions:

1 . Joints in adjacent members must be staggered.

2 . At any given joint location, the net width of the continuous pad system may not be less than would be required if supplemental pads were not used. (Net width is the width remaining after deducting the width of all pads having joints at the location under consideration.)

3 . Joints in individual members comprising the net width of the continuous pad system, as defined above, may not be located closer to the joint in the supplemental pad than the limiting length at that joint location.

Since supplemental pads are not considered in the analysis, they must be clearly identified as such on the falsework drawings.

7-2.05B Doubler Pads

A doubler pad, which is a second pad placed on top of the main pad, may be used to carry the post load across a joint located within the limiting length of the main pad.

A doubler pad may be an individual pad at a given post location or a continuous pad placed between two or more posts. To

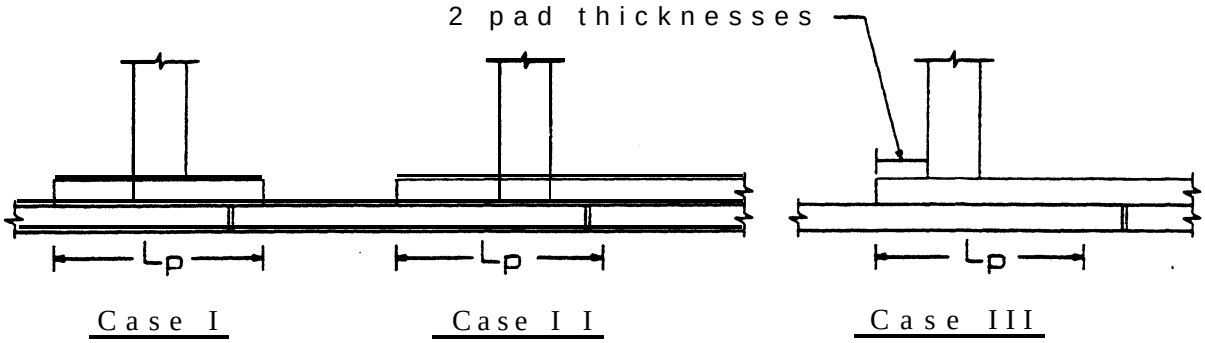


**FIGURE 7-10**

maintain the integrity of a continuous pad system, doubler pads must be of the same width and thickness as the main-pad, and they must be installed as provided in the following paragraphs,

Refer to Figure 7-10 and note that length **"$L_p$"** is the adjusted effective length of a symmetrically loaded phantom pad designed in accordance with Section 7-2.04. Analysis of Individual Pads. Use of doubler pads must conform to the following criteria:

1 . If a joint in the main continuous pad falls within the zone established by length $L_p$, either an individual doubler pad or a continuous doubler pad may be used. If an individual pad is used, it must be long enough to completely cover the $L_p$ zone. (See Case I in Figure 7-10.) If the doubler pad is continuous, it must extend past the adjacent post to the edge of the $L_p$ zone. (Case II in Figure 7-10.)

2 . If a joint in the main continuous pad falls beyond the $L_p$ zone but within the limiting length of the main pad, a continuous doubler pad must be used, and it must extend past the posts on either side of the joint at least two pad thicknesses. (Case III in Figure 7-10.)

7-2 .06 Corbels

Corbels are short beams used to distribute the post load across the top of the individual pads in a multiple pad system.

When a corbel is used, Division of Structures policy requires that it extend across the full width of the pad even though extension of the corbel to the outside of the pad may not be required by theoretical design considerations.

The Division's procedure for evaluating corbel adequacy is based on the following assumptions:

1 . The post load is applied symmetrically and is uniformly distributed across the full width of the pad.

The assumed symmetry may not be valid in the case of a continuous pad system where one or more supplemental pads are used to facilitate joint location. However, assuming a symmetrical load distribution will give a conservative result when supplemental pads are used, and the assumption greatly simplifies the calculation.

2 . When resisting the load applied by the pad, the corbel acts like a cantilever beam.

3 . For timber corbels, the point of fixity of the cantilever beam (and the point of maximum bending moment) is located mid-way between the centerline and outside face of the post.

4. For steel beam corbels, the point of fixity (and the point of maximum moment) is located in a vertical plane at the outside face of the post.

5 . If a round post is used, the post width to be used in the analysis is the length of the side of an equivalent area square post.

<u>7-2.06A Timber Corbels</u>

Figure 7-11 shows a typical timber corbel system where the post is rectangular. System adequacy is evaluated as follows:

1 . Calculate the perpendicular-to-grain bearing stress at the interface between post and corbel.

If the calculated stress exceeds the allowable stress, the system must be redesigned to reduce the post load or the load must be distributed over a larger bearing area by means of a steel plate. If a steel plate is used, the analysis is based on the assumption that the post width is numerically equal to the length of the steel plate.

2 . Calculate the vertical shear at a distance from the face of the post equal to the depth of the corbel. Calculate the horizontal shearing stress at this location.

3 . If horizontal shearing stress does not exceed the allowable stress, calculate the bending moment and the bending stress. The system is adequate if the calculated bending stress does not exceed the allowable stress.

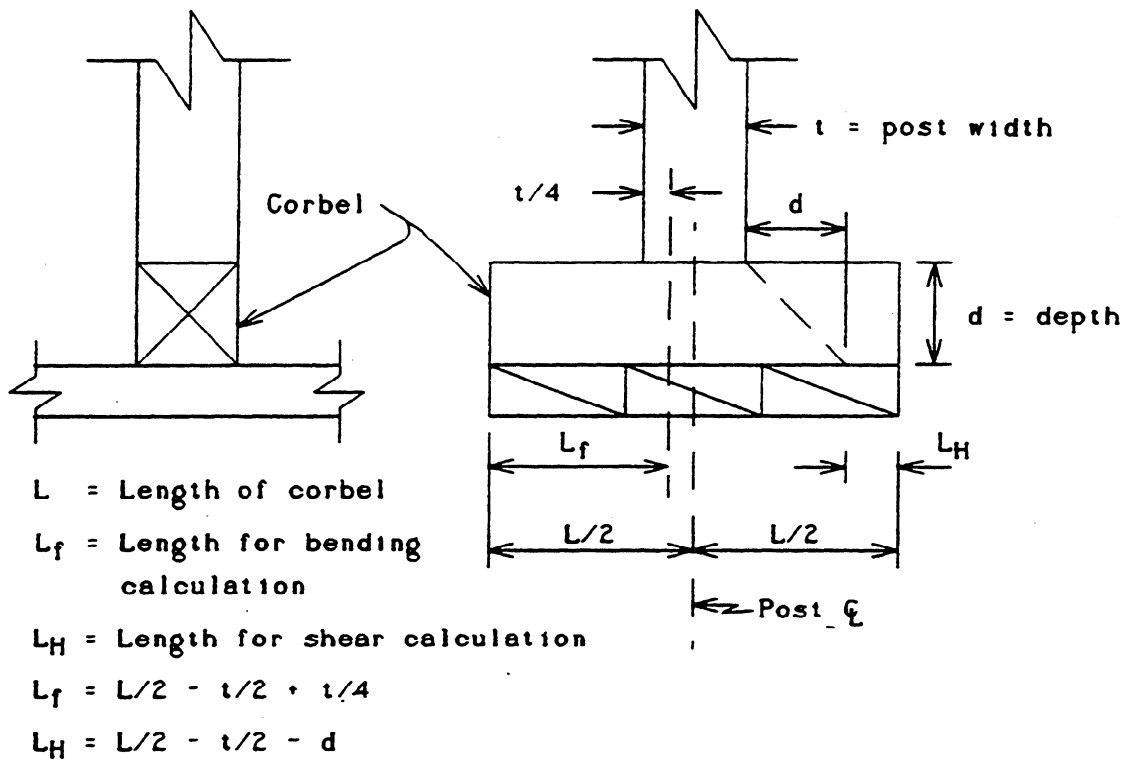


FIGURE 7-11

---

## 7-2.06B Steel Corbels

For steel beam corbels the procedure is as follows:

1 . Calculate the web crippling stress under the post using the total post load.

   If the calculated stress exceeds the allowable, the length of bearing must be increased or the beam web stiffened.

2 . Calculate the shear stress on the beam web using one-half of the total post load.

3 . Calculate the bending moment and the bending stress. (For steel beam corbels, the cantilever length is measured from the face of the post.)

4 . Calculate the perpendicular-to-grain bearing stress at the interface between corbel and pad.

## Section 7-3 Pile Foundations

### 7-3.01 Genera1

In general, pile foundations will be required whenever site conditions preclude the use of timber pads or concrete footings, Typically, piles are used to support falsework for structures. over water, for falsework such as heavy duty shoring where leg loads are high and/or where differential settlement must be prevented, and for any type of falsework where a conventional foundation is not feasible because of poor soil conditions.

In most cases timber piles will provide the most economical pile foundation. However, the design load on timber piles is limited to 45 tons; consequently, steel piles may be more economical when large loads are to be carried. Regardless of other considerations, steel piles may be the better choice at any location where difficult driving conditions are anticipated.

Driven piles may be cut off and capped near the-ground line, in which case the superstructure load will be carried by braced bents erected on top of the pile cap. In this configuration the piles will be supported throughout their length; therefore, they will be subjected to axial loading only. Unless driven by a drop hammer, such piles may be considered as capable of carrying a load equal to the bearing value given by the ENR formula, but not more than 45 tons for timber piles.

If a drop hammer is used, the ENR bearing value should be divided by a safety factor of 1.5 to obtain the allowable pile capacity. Also, unless the hammer weight is clearly evident, the contractor should be required to substantiatethe weight used in the bearing calculations.

Occasionally, site conditions will dictate the use of pile bents extending above the ground surface. Such bents may be unbraced, partly braced or fully braced depending on site conditions. Most pile bent designs will use timber piles; however, steel piles are also used when warranted by site or design considerations.

### 7-3.02 Capacity of Timber Piles in Pile Bents

The load-carrying capacity of timber piles in a pile bent is a function of many variable factors. For example, the type of soil, the depth at which the piles are fixed in the ground, the deviation of the piles from their theoretical position, and the contribution to system stability provided by diagonal bracing all affect the ability of timber pile bents to resist the applied loads, and all must be considered in the analysis.

Furthermore, the procedures used to evaluate pile capacity differ from those used in the analysis of other components of the falsework system because the pile analysis must consider the combined effect of vertical loads, horizontal loads and eccentric loading conditions to ensure that allowable stresses are not exceeded.

The factors that influence pile capacity are discussed in detail in the following sections.

7-3.02A Required Pile Penetration

The Division's procedure for analysis of timber pile bents is valid only if the piles penetrate the subsurface soils to the depth necessary to develop a point of contraflexure in the embedded pile. (In a driven pile, the point of contraflexure, or the point of pile fixity as it is called in the pile analysis, is the location below the ground surface where the pile shaft may be considered as "fixed" against rotation when it is subjected to a bending moment.)

Other factors being equal, the depth of embedment needed to develop pile fixity is a function of soil type. Obviously, soft soils require a deeper-penetration than firm soils, but determining the actual penetration required is a matter of engineering judgment.

The Division of Structures uses the ratio of the depth of pile penetration to the height of the pile above ground (expressed as D/H) as the criterion to ascertain whether a given pile is embedded deeply enough to develop a point of fixity. For the stress analysis, piles are considered fixed at the predicted depth below the ground surface when the D/H ratio is 0.75 or more.

When the D/H ratio is less than 0.75, the piles are not embedded deeply enough to develop the fixed condition; consequently, they will rotate to a degree when loads are applied. The amount of rotation is a function of the restraint developed by the actual pile embedment. The degree of restraint decreases and rotation increases as the D/H ratio becomes smaller.

When rotation occurs, bending stresses are reduced but overall pile capacity is reduced as well, and in a disproportionate amount. The procedure used by the Division of Structures to estimate pile capacity when the embedded length is insufficient to develop the fixed condition is discussed in Section 7-3.04, Field Evaluation of Pile Capacity.

As noted above, the Division's method of analysis assumes that pile embedment is sufficient to develop the fixed condition. This is not an unreasonable assumption because, for most soil types, the penetration needed to obtain bearing will develop pile fixity as well. However, while this assumption may be true in

general, it is not true in all cases; consequently, when timber pile bents are to be used, Division of Structures policy requires that approval of the design be contingent on the piles actually penetrating to the depth assumed in the analysis.[3]

7-3.02B Point of Pile Fixity

Assuming adequate penetration, the depth to the point of fixity is a function of soil stiffness and the diameter of the pile at the ground line. The relationship is:

$$y = (k)(d)$$

where y is the distance (depth) from ground line to the point of fixity, k is the soil stiffness factor, and d is the diameter of the pile at the ground line.

A widely accepted rule-of-thumb assumes that the point of fixity is located about four pile diameters below the ground surface for soil conditions ranging from medium hard to medium soft, and this assumption has been verified by recent load tests. Accordingly, assuming the depth of-pile fixity as four pile diameters (which corresponds to a k factor of 4.0) will be satisfactory for most soil types. For soft, yielding soils such as bay mud, this figure should be increased up to a maximum of six diameters.

Consideration may be given to raising the assumed point of fixity when piles are driven into very firm soils; however, caution is advisable because the driving of piles into any type of soil will tend to disturb the top few feet of the surrounding material.

An alternative approach uses information obtained from the Log of Test Borings sheet. The average of the penetrometer readings for the portion of the log equal to the depth of pile penetration, adjusted by eliminating spikes, gives an indication of the relative soil stiffness. With this average value, a soil stiffness factor can be obtained graphically from the Soil Factor Chart shown in Figure 7-12. As a precaution, however, keep in mind that while this method may appear sophisticated, it does not ensure a more accurate result. As a practical approach, use of the four-diameter rule-of-thumb will simplify analysis without sacrificing accuracy except in the case of very soft soils.

---

[3]As an example, if the above-ground height of a given bent. is 20 feet, approval of the design should be contingent on the piles penetrating at least 15 feet when they are driven, and this condition of approval should be noted on the falsework drawings.

703.02C Driving Tolerance

Unless the piles are carefully driven, it will be necessary to pull the top of each pile into line before setting the pile cap. Pulling the top of a pile from its driven position to its final position under the cap produces a bending moment which must be, considered in the analysis. If the piles are appreciably out of line, the resulting bending stress may reduce pile capacity substantially.

Similarly, any deviation of the top of the pile in its final position from a vertical line through the point of pile fixity will result in an eccentric loading condition that also reduces pile capacity. Vertical load eccentricity, often referred to as pile "lean", does not necessarily occur because a pile is pulled. It is an independent loading condition that occurs whenever the top of a pile in its final position under the cap is not centered around a vertical line through the point of pile fixity.

When investigating pile capacity, keep in mind that pile pull and pile lean are independent loading conditions. Either condition has the potential to reduce pile capacity substantially, and the adverse effect of both conditions must be considered in the design of timber pile bents. To ensure that they are considered, the specifications require the allowable driving tolerance for both conditions (maximum pull and maximum lean) to be shown on the falsework drawings.

7-3.02D Soil Relaxation Factor

The force required to pull the top of a pile from its driven position to its final position under the cap causes the pile to bend, which in turn produces pressure on the soil below the ground surf ace. With time, the soil will yield under this pressure, allowing the pile to straighten to a degree. The yielding of the soil, called soil relaxation, lowers the point of fixity, which lengthens the pile column and reduces the bending stress proportionally.

In the analysis, the effect of soil relaxation is accounted for by a soil relaxation factor. The value of the soil relaxation factor in a given situation is a function of soil type and the length of time between the initial pull and application of the vertical load. These relationships are shown graphically in the Soil Factor Chart in Figure 7-12.

For the typical bridge project, a duration of time of about one month between the initial pull and application of at least a part of the vertical load is a reasonable expectation. As shown on the Soil Factor Chart, for a one-month duration of time, the soil

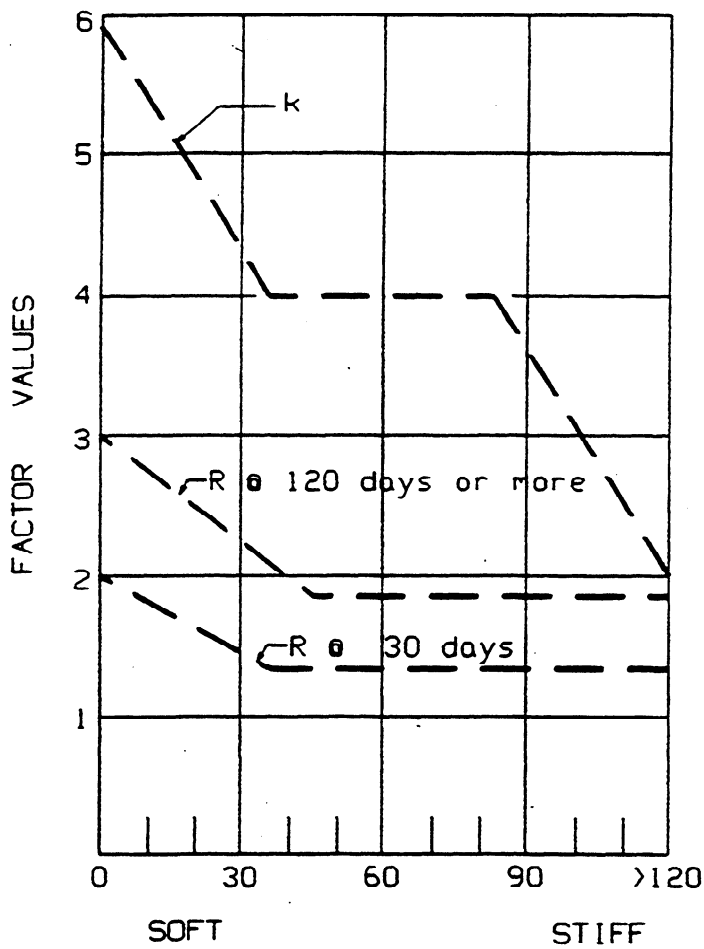


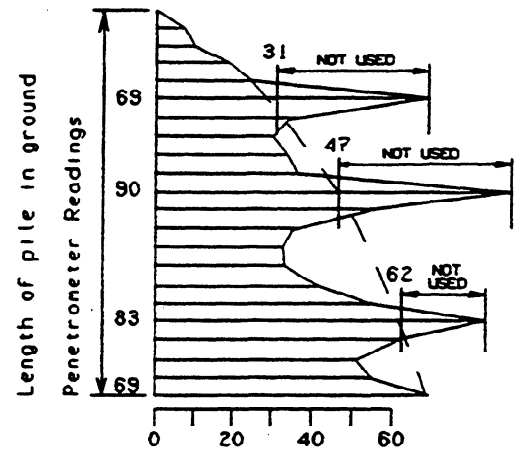


Sample Penetrometer Log

Another useful guideline for assigning a relative stiffness of the soil is to use the penetrometer test logs which are shown on the log of test boring plan sheets.

An average value is determined, using the portion of the log equal to the depth of pile penetration. Individual extremes (peaks) are adjusted.

This is an index of the relative stiffness of soil.

Sum adjusted readings = 816
22 Readings

816/22 = 37 Average Pen. Reading

Soil Factor Chart

**FIGURE 7-12**

relaxation factor, "R", is about 1.25 for soil conditions ranging from hard to medium soft. For softer soils the value may be increased, up to a maximum of 2.0 for very soft, yielding soils such as bay mud.

If it is known ahead of time that the piles will remain unloaded for an extended period after being pulled, consideration may be given to increasing the numerical value of the soil relaxation factor. As shown on the Soil Factor Chart, the recommended increase-is proportional to time, from 10 percent for two months up to a maximum of 50 percent for four months or longer.

7-03.02E Modulus of Elasticity

The specifications establish the upper limit for the modulus of elasticity for timber at 1.6 x $10^6$ psi. This is a reasonable value for the seasoned material typically used for falsework construct ion; however, a lower value may be more realistic for timber piles if relatively green material will be used.

When the nature of the material is unknown when the analysis is made, assume a value for E of 1.6 x $10^6$ psi. This value gives conservative results for unseasoned timber; therefore, its use is appropriate when the actual character of the pile material (green or seasoned) is not known

If green piles will be used, and if the contractor so requests, the analysis may be based on a lower E value. Keep in mind, however, that the modulus of elasticity of a given material can be determined only by a load test; it cannot be determined by observation. Accordingly, Division policy requires load test data to be furnished by the contractor to verify the actual modulus value in any case where a value less than 1.6 x $10^6$ psi is to be used.

7-3.02F Pile Diameter

Division of Structures policy requires falsework drawings to include enough information to enable the engineer to make a stress analysis, and this requirement applies to pile bents as well as other elements of the falsework system. In the case of timber piling, however, the exact dimensions may not be known ahead of time. In view of this, it is customary to base the design on minimum dimensions (minimum tip and butt diameter, minimum penetration, etc.) and to show these minimum dimensions on the falsework drawings.

When investigating pile capacity using contractor-furnished minimum dimensions, keep in mind that pile bents respond to applied loads in a different manner than other components of the falsework system. For example, if the actual diameter of the driven piles is larger than the diameter assumed in the analysis, vertical load-carrying capacity will be increased, as will the ability of the piles to withstand the adverse effect of pile lean. Other factors being equal, however, a large diameter pile cannot be pulled as far as a smaller pile. If the bending stress caused by pulling is a significant factor in the analysis, any pile having a larger ground line diameter than originally assumed may, in reality, have a lower overall load-carrying capacity.

Pile diameter has a greater influence on pile capacity than any other single factor, and the value used in the analysis should be selected with this fact in mind.

## 7-3.03 Analysis of Timber Pile Bents

To facilitate analysis of timber pile bents, the Division of Structures has adopted an empirical procedure which is based on the results of research involving full-scale load tests on driven timber piles. The test report concludes that evaluation of pile capacity using ultimate load factors will provide a higher degree of correlation with test results than will conventional analysis using a fixed level of working stresses.

To avoid a forced compliance with working stress values that appear overly conservative in the light of falsework requirements, the Division has developed a modified combined stress expression which, when used with an empirical procedure to determine the effect on pile capacity when driven piles are pulled into line, gives results that are in reasonably close agreement with the test results. Applicability of the Division's procedure has been confirmed by mathematical analysis using the computer pile shaft program currently used to design pile foundations in permanent work.

In essence, the Division's procedure is as follows:

1 . Calculate the bending stress in the pile at the time the pile is pulled into position, using the maximum allowable pile pull value shown on the falsework drawings. (This stress is called the "initial" bending stress.)

2 . Calculate the bending stress remaining in the pile after soil relaxation has taken place. (This stress is called the "relaxed" bending stress.)

3 . Calculate the bending stress caused by vertical load eccentricity, using the maximum allowable value for pile lean shown on the falsework drawings.

4 . Calculate the bending stress caused by the horizontal design load; calculate the lateral deflection of the pile bent and the bending stress caused by additional vertical load eccentricity resulting from that deflection. (This step is not required unless the L/d ratio exceeds 8. See Section 7-3.03C, Effect of Horizontal Loads.)

5 . Calculate the P-delta deflection for the horizontal design load and, if applicable, for pile lean; calculate the bending stress resulting from the P-delta deflection. (This step is not required unless the L/d ratio exceeds 15. See Section 7-3.03D, Effect of P-delta Deflection.)

6 . Calculate the compressive stress in the pile.

7 .Enter the appropriate values in the combined stress expression to verify the adequacy of the design.

## 7-3.03A Effect of Pile Pull

Determining the bending stress that occurs when a pile is pulled is a two-step process. The first step calculates the stress produced by the initial pull. The second step calculates the stress remaining in the pile when the loads are applied.

---

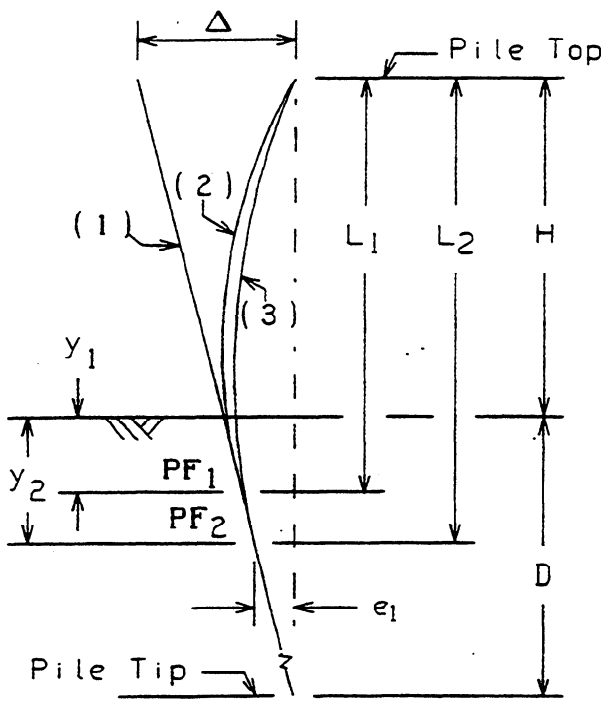


(1) - driven position

(2) - initial pulled position

(3) - relaxed position

**H -** pile height, from ground line to top of pile, in feet

**D -** pile embedment, from ground line to pile tip, in feet

**$PF_1$ -** initial point of pile fixity (i.e., when pile is pulled)

**$PF_2$ -** relaxed point of pile fixity (i.e., after soil relaxation takes place)

**$L_1$ -** initial length of pile column, in feet, from $PF_1$ to top of pile

**$L_2$ -** relaxed length of pile column, in feet, from $PF_2$ to top of pile

**$Y_1$ -** depth, in feet, from ground line to $PF_1$

**$Y_2$ -** depth, in feet, from ground line to $PF_2$

**Δ -** maximum allowable pile pull, in inches, shown on the falsework drawings

**$e_1$ -** pile eccentricity = maximum allowable pile lean, in inches, shown on the falsework drawings

**FIGURE 7-13**

Refer to Figure 7-13 for formula nomenclature and definition of terms used in the analysis. The procedure is as follows:

1 . Assume a ground line diameter using the minimum butt and tip diameters shown on the falsework drawings, the height of the bent from ground line to cap, and the estimated pile penetration. (See Section 7-3.02F, Pile Diameter.)

2 . Using the assumed ground line diameter, calculate the cross-sectional area, section modulus, and moment of inertia.

3 . Assume a value for the modulus of elasticity. (Caution: see Section 7-3.02E, Modulus of Elasticity.)

4. Determine the depth below ground line to the initial point of pile fixity. (See Section 7-3.02B, Point of Pile Fixity.)

5 . Determine the soil relaxation factor to be used in the analysis. (See Section 7-3.02D, Soil Relaxation Factor,)

**6. Calculate values for $L_1$ and $L_2$ as shown in Figure 7-13.**

$$L_1 = H + Y_1 \text{ and } L_2 = H + Y_2$$

In the formulas, $L_1$ is the length of the pile column when the pile is pulled initially, $Y_1$ is the depth to the initial point of fixity, $L_2$ is the length of the column after soil relaxation takes place, and $Y_2$ is the depth to the relaxed point of fixity. (Note that $Y_2 = Y_1$ multiplied by the soil relaxation factor.)

**7. Calculate the force ($F_1$) required to pull the top of the pile from its driven position to its final position under the cap.**

$$F_1 = \frac{3EI\Delta}{(12L_1)^3}$$

where the value for $\Delta$ is the -maximum allowable distance the top of the pile may be pulled, in inches, as shown on the falsework drawings, E is 1,600,OOO psi (unless a lower value has been selected for the analysis) and I is the moment of inertia from step 2.

8 .Calculate the initial bending stress $f_{bp(1)}$ in the pile.

$$f_{bp(1)} = \frac{F_1(12L_1)}{S}$$

where S is the section modulus from step 2.

For evaluation of pile adequacy, Division of Structures policy limits the calculated bending stress caused by the initial pile pull to 4000 psi.

9. Calculate the force ($F_2$) required to keep the top of the pile in its pulled position under the cap after all soil relaxation has occurred.

$$F_2 = \frac{3EI\Delta}{(12L_2)^3} = F_1(L_1)^3/(L_2)^3$$

10. Calculate the bending stress ($f_{bp(2)}$) remaining in the pile after soil relaxation has taken place.

$$f_{bp(2)} = \frac{F_2(12L_2)}{S}$$

## 7-3.03B Adequacy of Diagonal Bracing

For analysis, pile bents are classed as either braced or unbraced depending on the degree of rigidity provided by the bracing system. In addition, a bent is "braced" for analysis if it is stabilized by external support or if the horizontal forces are carried across the bent, as is often the case in the longitudinal direction.

To be classed as a braced bent, diagonal bracing must meet the following criteria:

1. Transverse bracing must comply with the provisions in Section 5-1.03, Diagonal Bracing. In addition, the frame must include a horizontal member installed in a plane through the connections at the bottom of the lowest tier of bracing. The horizontal member must be fastened to each pile in the bent with a bolted connection.

2. Longitudinal bracing, if used to stabilize the bent, must comply with the criteria for transverse bracing in the preceding paragraph. If longitudinal forces are carried across the bent, the design must comply with the criteria in Section 5-1.04, Longitudinal Stability.

## 7-3.03C Effect of Horizontal Loads

In a typical pile bent diagonal bracing will be installed between the cap and a point near the ground or water surface. Within the limits of a properly designed and constructed bracing system, the bracing will resist horizontal forces in the same manner as the bracing in any other framed bent. Below the bracing, however, a horizontal load will deflect the piles, and this deflection will

produce a bending moment. It is evident, then, that the ability of a pile bent to resist the horizontal design load is a function of the contribution to frame rigidity provided by the diagonal bracing and the stiffness of the individual piles.

Other factors being equal, the effect on system stability of bending stresses produced by the horizontal design load is a direct function of the unsupported length of the pile column. (For this case the unsupported length is the vertical distance between the relaxed point of pile fixity and the bolted connection at the bottom of the lowest tier of diagonal bracing.)

To ensure uniformity, Division policy requires consideration of the bending stress produced by application of the horizontal design load in all cases where the ratio of the unsupported pile length to the pile diameter. at the ground line (expressed as $L_u/d$ exceeds 8. For typical pile diameters and average soil conditions, this value corresponds to a distance of about two feet between the ground surface and the bottom of the bracing.

7-3.03D Effect of P-delta Deflection

When an unsupported pile is subjected to both horizontal and vertical loads, the pile will deflect laterally in the direction of the applied horizontal load, This lateral deflection moves the original point of application of the vertical -load, and the resulting horizontal displacement produces an eccentric loading condition. (See "x" in Figure 7-15 on page 7-40.)

The total vertical load eccentricity that occurs when the-pile column is deflected laterally is the sum of the deflection caused by the horizontal load and the additional deflection caused by bending which occurs as a consequence of the vertical load acting on the pile in its deflected position. The additional deflection of the pile column under the applied vertical load, and the corresponding increase in the bending stress, is often referred to as the "P-delta" effect.

The total deflection resulting from the combined action of a horizontal and a vertical load cannot be calculated directly since it is the sum of a converging mathematical series. However, it may be approximated by incremental addition using the iterative procedure and formulas shown in Figure 7-15. (See also Example Problem 14C in Appendix D.)

Additional bending due to the P-delta effect also occurs when a vertical load is applied to an unsupported pile that is leaning in any direction. When the load is applied, the pile column will deflect laterally in the direction of the pile lean. In this case the deflecting force is the horizontal component of the vertical load reaction acting along the axis of the out-of-plumb pile.

When the unsupported length of the pile column is small, the lateral deflection due to the P-delta effect will be small as well; consequently, the stress produced by additional bending in the pile may be neglected. As the unsupported length increases, however, the deflection also increases so that at some point the resulting bending stress must be considered in the analysis.

Division of Structures policy requires consideration of bending due to P-delta deflection when the ratio of the unsupported pile length to the ground line pile diameter ($L_u/d$) exceeds 15. While the use of a limiting $L_u/d$ ratio of 15 is considerably more liberal than is typically the case for frame analysis, this procedure is satisfactory for pile bents because of the inherent stability provided by the driven piles.

When considering the effect of P-delta deflection, keep in mind that the "H" value used to begin the iterative calculation is the total horizontal force produced by the combined application of the horizontal and vertical design loads. Thus H is the sum of the horizontal design load and the horizontal component of the vertical design load acting on the pile in its leaning position.

## 7-3.03E Adequacy of Braced Bents

For evaluation of design adequacy, braced bents are divided into three categories, or bent types, depending on the $L_u/d$ ratio of the unsupported pile column, as follows:

Type I - $L_u/d \leq 8$.

Type II - $8 > L_u/d \leq 15$.

Type III - $L_u/d > 15$.

The procedure to be followed depends on the type of bent under consideration, as explained in the following sections.

### 7-3.03E(1) Type I Pile Bents

Type I pile bents are bents where all bracing conforms to the criteria in Section 7-3.03B, Effect of Diagonal Bracing, and the $L_u/d$ ratio of the pile column is 8 or less.

In a Type I bent the bending stress produced by the horizontal design load may be neglected, and the modified combined stress expression is:

$$\frac{f_{bp(2)} + 2f_{bc(1)}}{3F_b} + \frac{2f_c}{3F_c} \leq 1.0$$

where $f_{bp(2)}$ = the bending stress remaining in the pile after soil relaxation takes place.

$f_{be(1)}$ = the bending stress due to vertical load eccentricity occurring as a consequence of pile lean.

$f_c$ = the stress in compression parallel to the grain (axial compression) due to the vertical load.

$F_b$ = the allowable working stress in bending.

$F_c$ = the allowable working stress in compression parallel to the grain.

In the combined stress expression, the numerical coefficients "2" and "3" are the load factor and the working stress modification factor, respectively.

As noted, a satisfactory condition is indicated when the value of the combined stress expression is not greater than 1.0.

The procedure for evaluating the adequacy of a braced bent using the modified combined stress expression is as follows:

1. Calculate $f_{bp(2)}$ following the procedure explained in Section 7-3.03A, Effect of Pile Pull.

2. Calculate the bending stress due to vertical load eccentricity.

$$f_{be(1)} = (P_v)(e_1)/S$$

where $f_{be(1)}$ is the bending stress; $P_v$ is the vertical design load, in pounds; $e_1$ is the maximum pile lean shown on the falsework drawings, in inches; and S is the pile section modulus.

3. Calculate the stress due to axial compression.

$$f_c = P_v/A$$

where $f_c$ is the compressive stress and A is the area of the pile at the ground line.

4. When longitudinal forces produced by the horizontal design load are carried across the bent, the unsupported length of the pile column in the longitudinal direction, because of the absence of bracing, will be greater than in the transverse direction. In such cases it is necessary to determine the allowable compressive stress using the column formula given in the specifications:

$$F_c = \frac{480,000}{(L_u/d)^2} \text{ but not more than 1600 psi.}$$

In the column formula, $F_c$ is the maximum allowable compressive stress parallel to the grain; $L_u$ is the unbraced length, in inches; and d is the least dimension, in inches, measured normal to the plane of bending.

Note that the column formula was developed for a square or rectangular section. For a round section such as a timber pile, the least dimension "d" is the length of the side of a square having the same cross-sectional area as the pile under consideration -- not the pile diameter. (See Chapter 4, Section 4-2.08, Timber Posts, for the derivation of the column formula.)

Pile area should be calculated using the ground line diameter. It is unnecessary to refine the calculation by considering pile taper.

The column formula given in the specifications is valid only when the modulus of elasticity for the member under consideration is 1,600,000 psi. If a lower value is being used in the analysis, the allowable stress given by the formula must be reduced by the ratio of the modulus value being used to 1,600,000.

When E is 1,600,000 psi the column formula will give an allowable compressive stress value below 1600 psi for $L_u/d$ ratios greater than about 17.3. The limiting $L_u/d$ ratio will be reduced below 17.3 for lower E values.

5 .Enter the appropriate values and solve the combined stress expression.

7-3.03E(2) Type II Pile Bents

Type II pile bents are bents where all bracing conforms to the criteria in Section 7-3.03B, Adequacy of Diagonal Bracing, and the $L_u/d$ ratio of the pile column is greater than 8 but not more than 15. For Type II bents it is necessary to consider the effect of horizontal forces but not P-delta deflection,

When calculating stresses and deflections in the pile column, the bent will be considered as a braced frame within the vertical limits of the bracing, and the horizontal design load will be applied in a plane through the bolted connections at the bottom of the bracing.

For analysis, the unsupported length of the pile column is the vertical distance between the relaxed point of pile fixity and the connections at the bottom of the lowest tier of bracing, and the pile column is assumed to be fixed against rotation and translation at the relaxed point of fixity and free to rotate and translate with the frame at the connection at the bottom of the bracing.

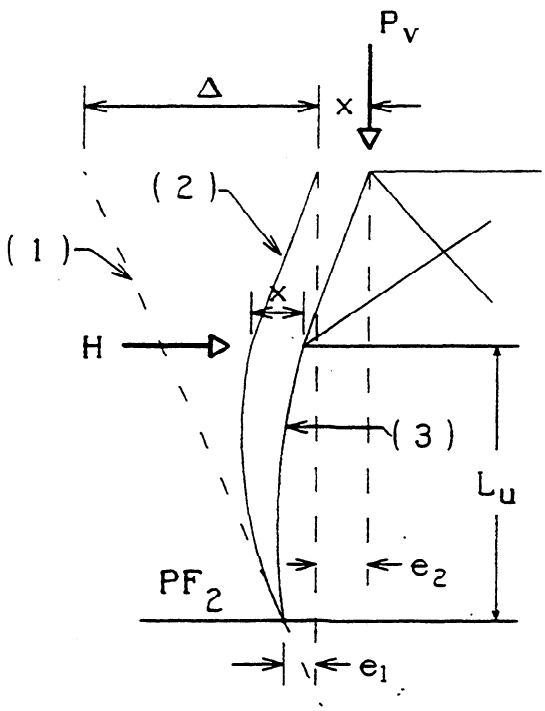


Δ - maximum allowable pile pull

$P_v$ - vertical design load

H - horizontal design load

x - horizontal displacement after applying the horizontal design loads

$L_u$ - unsupported length of pile column

$PF_2$ - relaxed point of pile fixity

$e_1$ - original vertical load eccentricity

$e_2$ - eccentricity due to horizontal displacement

(1) - driven position of pile

(2) - relaxed position of pile

(3) - position of pile after applying the horizontal design loads

**FIGURE 7-14**

---

Figure 7-14 is a schematic representation of a pile in a Type II pile bent before and after the horizontal design load is applied. Design adequacy is evaluated as follows:

1. Calculate the bending stress remaining in the pile after soil relaxation takes place, the bending stress produced by vertical load eccentricity due to pile lean and the stress due to axial compression and, if necessary, the allowable compressive stress. For these calculations follow the procedure for Type I bents explained in the preceding section.

2. **Calculate the bending stress produced by the horizontal design load.**

$$f_{bH} = (H)(12L_u)/S$$

where $f_{bH}$ is the bending stress; H is the horizontal design load, in pounds; $L_u$ is the unsupported length of the pile column, in feet; and S is the pile section modulus.

3. Calculate the lateral displacement that occurs when the horizontal design load is applied to the pile column. (See "x" in Figure 7-14.)

$$x = \frac{(H)(12L_u)^3}{3EI}$$

where x is the displacement, in inches; E is the modulus of elasticity; and I is the moment of inertia of the pile column.

4. Calculate the bending stress due to additional vertical load eccentricity caused by the horizontal displacement. (The additional vertical load eccentricity is numerically equal to the horizontal displacement. See Figure 7-11.)

$$f_{bc(2)} = (P_v)(e_2)/S$$

where $f_{bc(2)}$ is the bending stress; $P_v$ is the vertical design load, in pounds; and $e_2$ is the additional vertical load eccentricity caused by the horizontal displacement, in inches.

5. Enter the stress values and solve the combined stress expression. For this case the expression becomes:

$$\frac{f_{bp(2)} + 2f_{bc(1)} + 2[f_{bH} + f_{bc(2)}]}{3F_b} + \frac{2f_c}{3F_c} \leq 1.0$$

where $f_{bH}$ is the bending stress produced by the horizontal design load and $f_{bc(2)}$ is the bending stress produced by vertical load eccentricity resulting from lateral displacement of the pile at the point of application of the horizontal design load.

As shown in the combined stress formula, all bending stresses are additive. This occurs because, when evaluating the adequacy of pile bent designs, the horizontal design load is assumed to act in the direction that produces the highest combined bending stress in the pile column.

7-3.03E(3) Type III Pile Bents

Type III pile bents are bents where all bracing conforms to the criteria in Section 7-3.03B, Adequacy of Diagonal Bracing, and the $L_u/d$ ratio of the pile column exceeds 15. For Type III bents it is necessary to consider the bending stress produced by P-delta deflection. The procedure is as follows:

1. Calculate the bending stress remaining in the pile-after soil relaxation takes place and the bending stress due to pile lean.

2 . Calculate the bending stress due to application of the horizontal design load. (See step 2 in the preceding section.)

3 . Calculate the horizontal component of the vertical load reaction when the vertical load is applied to the pile in its initial leaning position.

$$H_c = (P_v)(e_1)/12L_2$$

where $H_c$ is the horizontal component, in pounds; $P_v$ is the vertical load, in pounds; $e_1$ is the maximum allowable pile lean shown on the falsework drawings, in inches; and $L_2$ is the length of the pile when $P_v$ is applied, in feet.

4. Both the horizontal design load [H] and the horizontal component of the vertical design load [$H_c$] act on the pile to produce additional vertical load eccentricity. Therefore, these two forces are added to obtain the horizontal force to use in the P-delta calculation.

5 . Using the total horizontal force from step 4, calculate the total horizontal displacement (e3) following the procedure explained in Section 7-3.03D, Effect of P-delta Deflection, and illustrated in Figure 7-15 Example Problem 14C in the appendix.

6 . Calculate the bending stress produced by the horizontal displacement calculated in step 5.

$$f_{bc(3)} = (P_v)(e_3)/S$$

where $f_{bc(3)}$ is the bending stress; $P_v$ is the vertical design load, in pounds; $e_3$ is the P-delta deflection due to the combined effect of the horizontal design load and pile lean, in inches; and S is the pile section modulus.

7. Calculate the stress due to axial compression.

8 . Determine the allowable compressive stress using the column formula given in the specifications. (See the discussion in Section 7-3.03E(l), Type I Pile Bents.)

9 . Enter the stress values and solve the combined stress expression. For this case the expression becomes:

$$\frac{f_{bp(2)} + 2f_{bc(1)} + 2[f_{bH} + f_{bc(3)}]}{3F_b} + \frac{2f_c}{3F_c} \leq 1.0$$

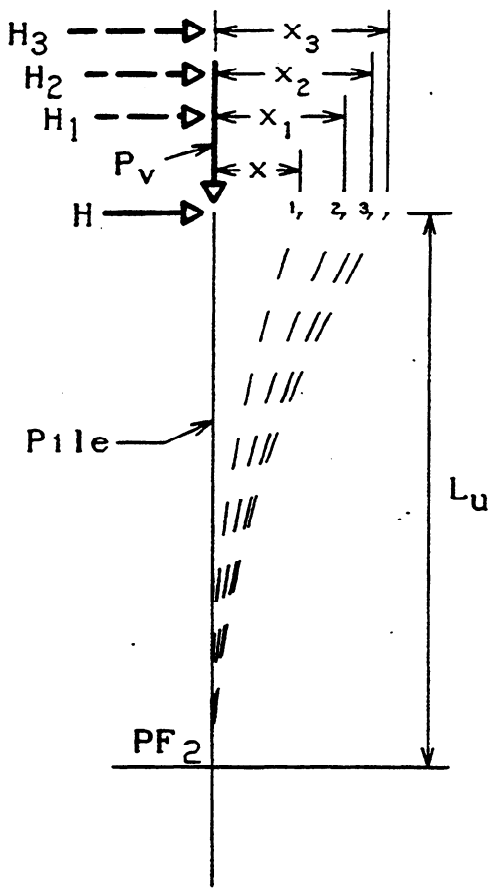


$L_u$ - unsupported length, in feet

$PF_2$ - relaxed point of pile fixity

$P_v$ - vertical design load, in pounds

H - actual horizontal force, in pounds

x - horizontal displacement, in inches, due to H

$$x = \frac{(H)(12L_u)^3}{3EI}$$

$x_1$ - total horizontal displacement, in inches, when $P_v$ is applied at point (1)

$H_1$ - fictitious force required to produce $x_1$

$$H_1 = H + \frac{(P_v)(x)}{12L_u}$$

$$x_1 = \frac{(H_1)(12L_u)^3}{3EI} = \frac{(H_1)(x)}{H}$$

$x_2$ - total horizontal displacement, in inches, when $P_v$ is applied at point (2)

$H_2$ - fictitious force required to produce $x_2$

$$H_2 = H_1 + \frac{(P_v)(x_1 - x)}{12L_u}$$

$$x_2 = \frac{(H_2)(12L_u)^3}{3EI} = \frac{(H_2)(x)}{H}$$

$x_3$ - total horizontal displacement, in inches, when $P_v$ is applied at point (3)

$H_3$ - fictitious force required to produce $x_3$

$$H_3 = H_2 + \frac{(P_v)(x_2 - x_1)}{12L_u}$$

$$x_3 = \frac{(H_3)(12L_u)^3}{3EI} = \frac{(H_3)(x)}{H}$$

The value for "H" is the actual horizontal force being used in the analysis. In the formulas, all horizontal force values are in pounds. The iteration may be discontinued when the calculated total displacement exceeds the previously calculated total displacement by less than 5 percent.

**FIGURE 7-15**

## 7-3.03F Investigation of Longitudinal Stability

The discussion in Sections 7-3.03E(2) and 7-3.03B(3) has focused on the procedures used to evaluate the adequacy of Type II and Type III pile bents, respectively, when subjected to horizontal forces applied in the transverse direction, or parallel to the plane of the bracing. However, the falsework system must be capable of resisting horizontal forces applied in any direction; therefore, the pile bent analysis must consider longitudinal stability as well.

In most falsework designs, longitudinal stability is achieved by carrying the horizontal design load across the falsework bents to a point of external support, such as an abutment or column that is part of the permanent structure. Such designs must comply with the provisions in Section 5-1.04, Longitudinal Stability.

When pile bents are designed in accordance with Section 5-1.04, longitudinal application of the horizontal design load need not be considered in the pile analysis. If, however, longitudinal stability is provided by some other means, such-as diagonal bracing between two or more adjacent bents, the ability of the piles to resist the horizontal design load must be investigated.

Diagonal bracing used in the longitudinal direction must comply with the provisions Section 7-3.03B, Adequacy of Diagonal Bracing, including the requirement for a horizontal member between the connections at the bottom of the bracing. The horizontal member must be sized to carry the horizontal design load as a column. If the member is not so designed, or if the bracing fails to comply with Section 7-3.03B in any other aspect, the bent will be considered "unbraced" for analysis in the longitudinal direction.

When the longitudinal bracing is adequate, the horizontal design load will be applied in a plane through the connections at the bottom of the bracing, and the stresses and deflections in the pile column below the bracing will be calculated as provided in Sections 7-3.03E(2) and 7-3.036(3) for Type II and Type III bents, respectively. However, there are several additional factors that must be kept in mind when making the longitudinal analysis, as discussed in the following paragraphs.

First, when the connections at the bottom of the longitudinal bracing are not located in the same horizontal plane as the connections at the bottom of the transverse bracing, the length of the pile column below the bracing will be different for the longitudinal and transverse directions, and this may result in different bent types in the two directions. For example, a given bent may be Type II for analysis in the transverse direction, but because of the bracing location, the bent may be Type III when viewed in the longitudinal direction.

Second, all bents that are connected by longitudinal bracing will deflect together when the horizontal design load isapplied in the longitudinal direction; consequently, the total horizontal design load acting on the system must be apportioned between the bents. When the piles in each bent have similar properties, each bent will resist one-half of the total load, but this will result in a different design load longitudinally than transversely unless each bent carries the same vertical load.

Consider the bent and bracing arrangement shown schematically in Figure 7-16. For braced bent D-E, the horizontal design load in the transverse direction is 0.02P and 0.03P at bents D and E, respectively. In the longitudinal direction, however, the design load is (l/2)(0.02) (P + 1.5P) = 0.025P at both bent D and bent E.

Even where the vertical load is the same at all bents under consideration, the horizontal design load is not necessarily the same. For example, at bent A-B in Figure 7-16, the horizontal design load in the transverse direction is the same for both bents. In the longitudinal direction, however, some portion of the horizontal load generated by the vertical load applied to free-standing bent C will be carried over to bent B, and this produces a greater horizontal design load longitudinally than transversely at each -bent in the A-B system.

Finally, differences in the applied vertical load on adjacent braced bents may create a situation where the piles in the two bents will have different physical properties, as would be the case at bents D-E and F-G, for example, if bents E and F require a larger diameter pile to carry the heavier vertical load. In such bents, the total horizontal load acting on the system must be apportioned between the bents in a manner that reflects the relative stiffness of the piles in each bent, rather than equally between the bents.

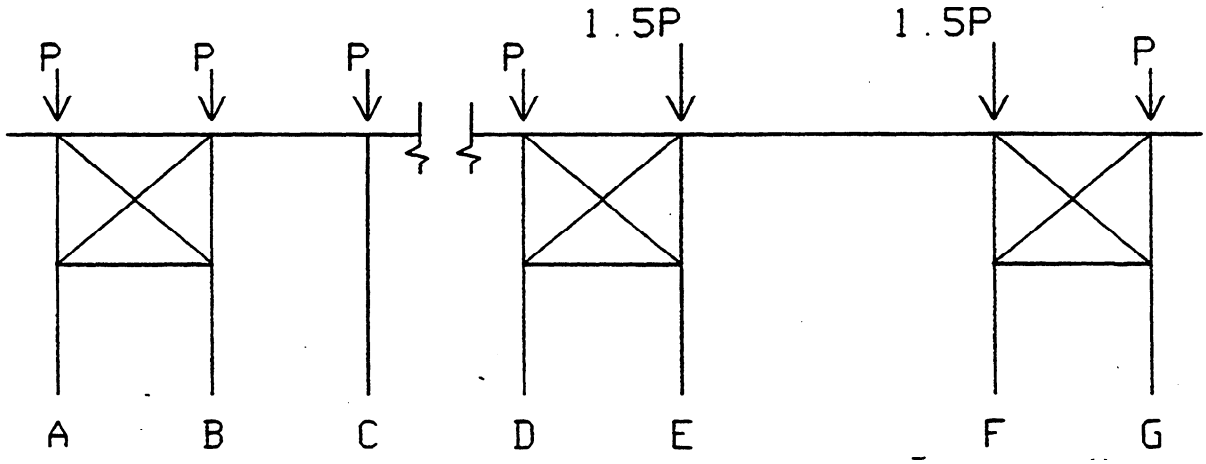


FIGURE 7-16

## 7-3.03G Analysis of Unbraced Bents

An unbraced bent is any bent where diagonal bracing is not used and which is not stabilized by external support. For analysis, the term "unbraced bent" also includes any braced or partly braced bent where the bracing does not meet the criteria in Section 7-3.03B, Adequacy of Diagonal Bracing.

When calculating the deflection and bending moment in an unbraced bent, the horizontal design load will be applied in a plane at the top of the piles, and the piles will be analyzed as unsupported cantilevers extending from the relaxed point of pile fixity to the pile cap.

Except for the point of application of the horizontal design load, the adequacy of unbraced bents is evaluated in the same manner as braced bents. Follow the procedure for the appropriate pile bent type as discussed in Section 7-3.03E, Adequacy of Braced Bents.

## 7-3.04 Field Evaluation of Pile Capacity

Because of the construction uncertainties associated with pile driving, piles in the driven position do not always attain the penetration assumed in the analysis. Additionally, unanticipated driving and/or site conditions may cause a driven pile to deviate from its planned position to a significantly greater degree than the allowable deviation assumed by the contractor and shown on the falsework drawings.

From a contractual standpoint, any pile that fails to reach the required penetration, or which deviates from its theoretical position to a greater extent than the allowable deviation shown on the falsework drawings, or which fails to meet any other design assumption, may be rejected without further evaluation because the construction work represented by that pile is not in conformance with the approved falsework drawings.

The above policy notwithstanding, circumstances may arise which in the engineer's judgment would warrant an evaluation of the actual load-carrying capacity of a particular pile in its driven condition. It is emphasized, however, that field personnel are not authorized to undertake any unilateral investigation of driven pile adequacy. When driven piles are not in conformance with design assumptions shown on the falsework drawings or noted on the drawings as a condition of design approval, no further evaluation is required or expected unless the contractor requests an evaluation, and submits a revised falsework drawing with supporting calculations showing that the pile or piles in the non-conforming as-driven condition are nevertheless capable of resisting the design loads.

The procedures used by the Division of Structures to estimate the capacity of piles which do not attain the penetration necessary to develop pile fixity, or which in their driven position exceed the allowable driving tolerances shown on the falsework drawings, are explained in the following sections.

Section 7-3.04A Failure to Attain Required Penetration

As discussed in Section 7-2.02A, Required Pile Penetration, the Division of Structures uses the ratio of the depth of pile penetration to the height of the pile above the ground surface (expressed as D/H) as the criterion to ascertain whether a given pile is driven deeply enough to develop the fixed condition. For analysis, pile fixity is assumed when the D/H ratio is 0.75 or more.

When driven piles do not attain the penetration necessary to assure the fixed condition, the procedure for analysis discussed in the preceding sections of this manual is not valid. However, the Division has developed an alternative procedure that may be used to estimate the load-carrying capacity of such piles.

The Division's alternative procedure assumes that any pile having a D/H ratio of less than 0.75 will rotate to a degree when the loads are applied. The amount of rotation is a function of the. restraint developed by the pile embedment actually obtained. The degree of restraint decreases and rotation increases as the D/H ratio becomes smaller; consequently, the procedure depends on the actual D/H ratio in a given situation, as explained in the following Sections.[4]

7-3.04A(l) Analysis for D/H Ratios Between 0.75 and 0.45

When the D/H ratio is less than 0.75 but not less than 0.45, the piles are capable of resisting some bending. The amount of bending resistance developed by a given pile is an inverse function of the degree of rotation. As the D/H ratio decreases between the limiting values, rotation increases and bending resistance and overall load-carrying capacity are reduced.

---

[4] Reference to the chart in Figure 7-17 reveals that pile rotation will reduce the relative stiffness of a pile for all D/H ratios below 1.0, although the stiffness coefficient is too small to have an appreciable influence on pile capacity until the D/H ratio decreases to about 0.75. For this reason, the Division of Structures has selected 0.75 as a practical limiting D/H ratio for the fixed-condition assumption.

To account for the reduced overall load-carrying capacity when rotation occurs, the analysis applies a stiffness reducing coefficient when calculating the depth to the point of pile fixity. The stiffness reducing coefficient, or "Q", is obtained graphically from the chart in Figure 7-17, which shows Q values for D/H ratios from 0.45 to 1.0 for average and soft soils.

The procedure for estimating pile capacity is as follows:

1 . Determine the actual D/H ratio using the as-driven pile penetration. Using the actual D/H ratio, select "Q" from the chart in Figure 7-17.

2 . Using the Q value from step 1, calculate a new $L_2$ value.

$$\text{New } L_2 = H + (Q)(Y_2)$$

where $Y_2$ is the previously calculated depth to the relaxed point of pile fixity and the expression $(Q)(Y_2)$ is the depth to an adjusted point of fixity used in the analysis.

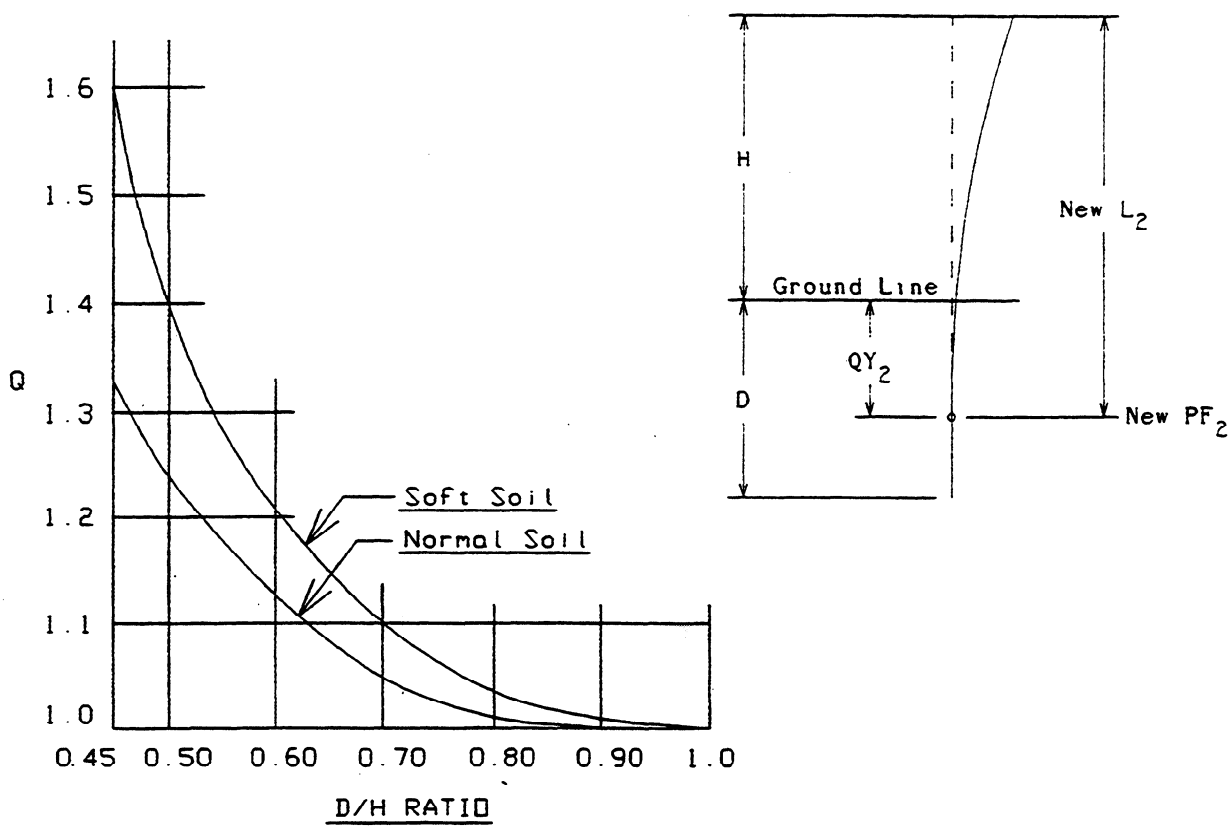


**FIGURE 7-17**

Note that it is unnecessary to calculate a new $L_1$ value because it is unnecessary to recalculate the bending stress that occurs during the initial pile pull. The smaller D/H ratio results in a longer $L_1$ column, which in turn produces a lower initial bending stress.

3. Using the new $L_2$, calculate a new unsupported length and a new (adjusted) $L_u/d$ ratio. (The new unsupported length is the vertical distance between the bottom of the bracing and the ground surface plus the depth to the adjusted point of pile fixity [Q x $Y_2$] from step 2.)

   Use the new $L_u/d$ ratio to determine the bent type for the pile capacity analysis.

4. For a Type I bent use the new $L_2$ length and calculate new values for $f_{bp(2)}$ and $f_{bc(1)}$.

5. For a Type II bent, use the new $L_2$ to calculate new values for $f_{bp(2)}$ and $f_{bc(1)}$, and the new $L_u$ to calculate new values for $f_{bH}$ and $f_{bc(2)}$.

1. For a Type III bent use the new $L_2$ to calculate new values for $f_{bp(2)}$ and $f_{bc(1)}$, and the new $L_u$ to calculate new values for $f_{bH}$ and $f_{bc(2)}$

Enter the new values obtained in steps 4, 5 or 6 as the case may be in the appropriate combined stress expression. The pile is adequate if the value of the expression is not greater than 1.0.

### 7-3.04A(2) Analysis for D/H Ratios Below 0.45

For D/H ratios below about 0.45, the ability of a given pile to resist pullback bending decreases rapidly and, as the theoretical point of contraflexure approaches the pile tip, pile restraining capability becomes highly subjective. Furthermore, as pile embedment decreases, the type of soil has a significantly greater influence on the ability of a pile to resist rotation.

For these reasons, piles having a D/H ratio of less than 0.45 are considered as incapable of developing a true point of fixity. When subjected to. a bending moment, such piles are assumed to be free to rotate but restrained against lateral translation at or very near the pile tip.

In view of the uncertainties associated with low D/H ratios, Division policy assumes that any pile having an actual D/H ratio less than 0.45 will be capable of carrying axial loads only, For such piles, any vertical load eccentricity and all horizontal forces must be resisted by bracing, external support or other piles in the system.

Section 7-3.04B Failure to Meet Driving Tolerances

In accordance with Division policy, bending stresses produced by the allowable driving tolerances (pile pull and pile lean values shown on the falsework drawings) are added when reviewing falsework designs for compliance with contract requirements. This procedure is necessary to ensure that the piles are not overstressed under the most adverse loading combination.

In practice, however, the pile pull direction may be opposite to the vertical load eccentricity caused by pile lean, in which case the adverse loading combination assumed in the analysis will not occur. When the pile pull direction is opposite to the vertical load eccentricity, the two bending stresses are compensating. Depending on the actual as-driven position, excessive pile pull in one direction may be offset by excessive lean in the opposite direction, so that the resulting combined stress is less than the allowable stress.

Refer to Figure 7-18 and note that **"Δ"** and "e" are the actual pull and lean distances for the driven position of a pile in a braced bent. Both distances exceed their respective allowable values for pile pull and pile lean shown on the approved falsework drawings. (Note: for the following general discussion, the direction of pile pull and the direction of pile lean are assumed to be in the same vertical plane.)

When calculating bending stresses for the as-driven position of a given pile, follow the procedures explained in Section 7-3.03, Analysis of Pile Bents, but use the actual pile pull and pile lean distances. Note, however, that for the as-driven analysis, it is also necessary to determine whether the bending stress values are positive or negative before solving the combined stress expression.

In accordance with standard sign convention, stress values are positive or negative depending on the direction of the bending moment applied at the relaxed point of pile fixity. A clockwise moment produces positive bending stress. Conversely, a counterclockwise moment produces negative bending stress. Therefore, in a Type I bent, the combined stress expression for the general case is:

$$\left| \frac{\pm f_{bp(2)} \pm 2f_{be(1)}}{3F_b} \right| + \frac{2f_c}{3F_c} \leq 1.0$$

The vertical lines on either side of the bending stress fraction indicate that the absolute value of the fraction is to be used when solving the expression.

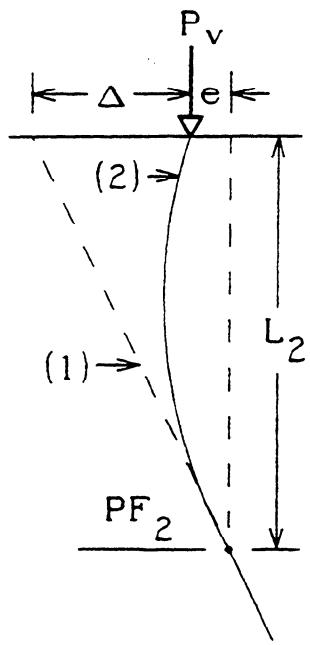


Δ - actual pile pull distance, in inches, for the as-driven pile

e - pile eccentricity = actual pile lean, in inches, for the as-driven pile

$P_v$ - vertical design load

$PF_2$ - relaxed point of pile fixity (i.e., after soil relaxation takes place)

$L_2$ - relaxed length of pile column, in feet, from $PF_2$ to top of pile

(1) - as-driven position of pile

(2) - relaxed position of pile

**FIGURE 7-18**

---

Refer to Figure 7-18 and note that the pile pull, because it is clockwise, produces a positive bending stress. The vertical load eccentricity due to pile lean applies a counter-clockwise moment; therefore, the stress it produces is negative. For the pile in Figure 7-18, the combined stress expression looks like this:

$$\left| \frac{\pm f_{bp(2)} - 2f_{be(1)}}{3F_b} \right| + \frac{2f_c}{3F_c} \leq 1.0$$

Summarizing, when the as-driven position of a pile in a Type I bent exceeds the driving tolerances shown on the falsework drawings, the capacity of that pile may be estimated as follows:

1 . Calculate the initial bending stress due to pile pull using the actual pull distance. If the calculated stress is less than the allowable stress of 4000 psi for the initial pull, calculate the relaxed bending stress.

2 . Calculate the bending stress due to pile lean using the actual eccentricity distance.

3 . Determine the direction of the applied bending moment at the relaxed point of pile fixity and the sign (positive or negative) of the two bending stresses.

4. Determine the stress due to axial compression. (Axial compression is not affected by the excessive pile pull or pile lean; consequently, the value to be used in this analysis is the value calculated for the design review.)

5. Enter the stress values and solve the combined stress expression. The load-carrying capacity of the pile in its driven position is satisfactory if the value of the combined stress expression is not greater than 1.0.

When the pile to be evaluated is in a Type II bent, it is also necessary to consider the effect of horizontal deflection. For a pile in a Type II bent, then, the combined stress expression for the general case is:

$$\left| \frac{\pm f_{bp(2)} \pm 2f_{be(1)}}{3F_b} \right| + \frac{2[f_{bH} + f_{be(2)}]}{3F_b} + \frac{2f_c}{3F_c} \leq 1.0$$

As shown in the expression, both the relaxed bending stress $[f_{bp(2)}]$ and the stress due to pile lean $[f_{be(1)}]$ may be either positive or negative depending on the direction of bending, while the sum of the bending stresses produced by the horizontal design load $[f_{bH} + f_{be(2)}]$ is positive. (Note that the H load bending stresses are always positive because, even though the horizontal design load may act from either direction, for analysis the horizontal load is applied from the direction that produces the highest combined bending stress.)

When the pile to be evaluated is in a Type III bent, the final term in the numerator of the bending stress fraction is replaced by $f_{be(3)}$ to account for the additional vertical load eccentricity produced by P-delta deflection.

The preceding discussion has assumed that pile pull and pile lean (and horizontal deflection, if applicable) are in the same plane. In actual practice, this would be an unlikely occurrence.

When the bending forces due to pile pull and pile lean act in different vertical planes, it is necessary to add the bending stress vectors geometrically and enter the resultant stress in the combined stress expression.

The procedure for evaluating pile capacity using vector analysis is explained in the following section. Keep in mind, however, that an analysis based on the assumption that pile pull and pile lean are in the same plane is conservative since, for a given pile, it gives a larger combined stress expression value than an analysis that considers the actual direction of application of the bending forces. Therefore, stress vectoring should not be necessary in all cases.

Determining in advance of analysis whether the relative direction of application of the bending forces is of sufficient importance to warrant consideration is a matter of engineering judgment. As a guide, if the angle between the two bending planes is small, say less than about 30 degrees, same plane bending may be assumed and the evaluation made on this basis. If the value of the combined stress expression is less than 1.0, the pile under consideration is adequate.

If the calculated value of the combined stress expression is greater than 1.0, judgment is required to determine whether reevaluation using vector analysis will result in a satisfactory condition. Generally, if the value is greater than 1.0 but only slightly greater, pile capacity should be reevaluated based on the actual direction of load application.

7-3.04B(l) Vectorins of Stresses

Figure 7-16 is a schematic plan view showing the location of the bottom of a pile, the top of the same pile in its driven and final (pulled) position under the cap, and the direction of pull and the direction of lean after pulling. Also-shown are stress vectors for the relaxed bending stress [$f_{bp(2)}$] and the bending stress due to pile lean [$2f_{bc(1)}$], and the resultant of these two vectors. Note that the stress resultant is designated "$f_{bR}$".

In a braced bent, the procedure for evaluating pile capacity using stress vectoring is as follows;

1. Determine the direction of pull and the pull distance.

2. Calculate the initial bending stress due to the pile pull using the actual pull distance. If the calculated stress is less than the allowable stress of 4000 psi for the initial pull, calculate the relaxed bending stress.

3. Determine the direction of lean after the pile is pulled, and the magnitude of the lean.

4. Calculate the bending stress produced by vertical load eccentricity resulting from the pile lean using the actual eccentricity distance.

5. Multiply the value obtained in step 4 by the load factor coefficient of 2 to obtain the stress value to use in the resultant calculation.

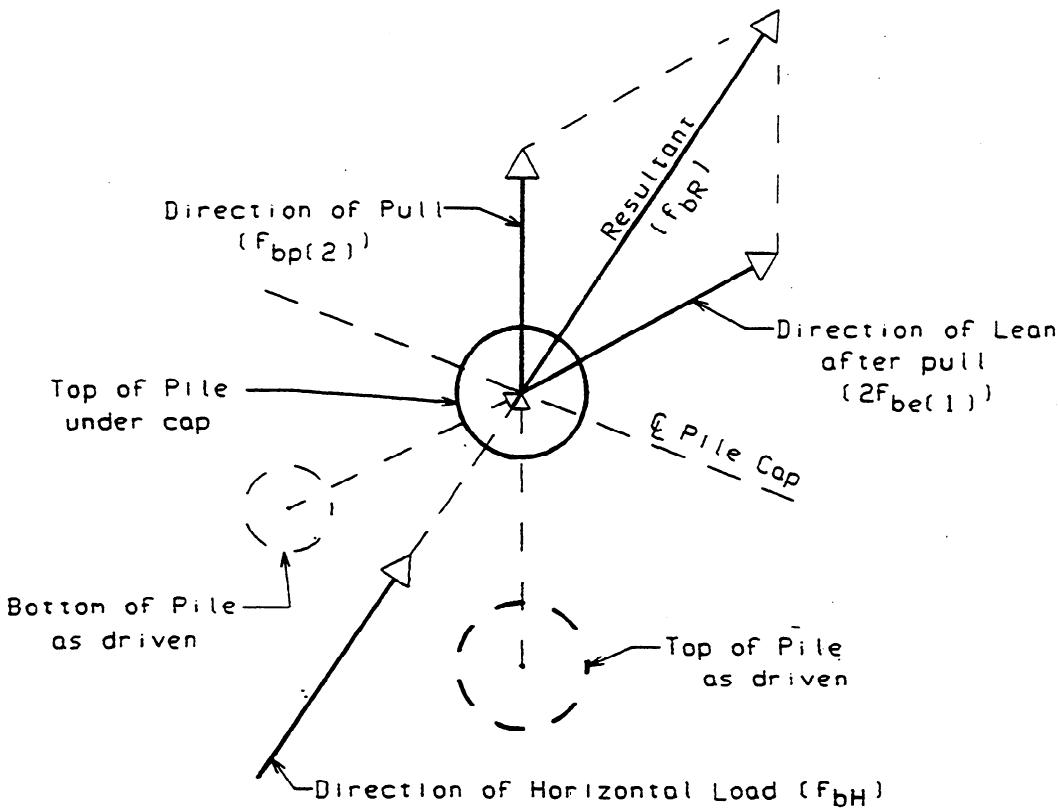


**FIGURE 7-19**

---

6 . Plot the stress vectors as shown in Figure 7-19. Note that the vectors are plotted outward from the center of the pile in the direction of pull and lean.

While plotting is not essential to the calculation, it has two important advantages. First, a graphical portrayal of the problem provides a visual check on the direction and magnitude of the resultant. Second, if the vectors are plotted on a large enough scale, the resultant stress value may be scaled with sufficient accuracy to use in the remaining calculations.

7 . Calculate (or scale.) the resultant bending stress.

Axial compression is not affected by the excessive pile pull or pile lean; consequently, it is unnecessary to recalculate the compressive stress.

For a Type I bent, the combined stress expression is:

$$\frac{f_{bR}}{3F_b} + \frac{2f_c}{3F_c} \leq 1.0$$

When the pile to be evaluated is in a Type II or Type III bent, the effect of horizontal deflection must be considered. However, since the bending stress produced by the horizontal load is not affected by excessive pull and/or excessive lean, the bending stress values to be used in the combined stress expression are the values previously calculated for the design review. Also, since the horizontal design load may act in any direction, for the analysis it is assumed to act in the same direction as the resultant force [$f_{bR}$] because this will produce the highest stress. (See Figure 7016.) Therefore, all bending stresses will be additive.

For a pile in a Type II bent the combined stress expression is:

$$\frac{f_{bR} + 2[f_{bH} + f_{bc(2)}]}{3F_b} + \frac{2f_c}{3F_c} \leq 1.0$$

When the pile being evaluated is in a Type III bent, it is a also necessary to consider the P-delta effect, and the combined stress expression becomes:

$$\frac{f_{bR} + 2[f_{bH} + f_{bc(3)}]}{3F_b} + \frac{2f_c}{3F_c} \leq 1.0$$

**Example Problem 15 illustrates the procedure to be followed when evaluating the actual load-carrying capacity of driven piles in Type II and Type III bents.**

## 7-3.05 Capacity of Steel Piles and Steel Pile Bents

Occasionally, anticipated hard driving or a particular site condition will dictate the use of steel piles for falsework support, Additionally, steel piles may be used where foundation loads are of such high magnitude that timber piles, because of their lower load-carrying capacity, are not feasible.

For analysis, steel piles which are cut off and capped near the ground line may be considered as laterally supported against buckling. Accordingly, the load-carrying capacity of such piles will be equal to the driving resistance determined as provided in Section 7-3.01, Introduction, but not more than the pile can carry when analyzed as a short column.

## FOUNDATIONS

As a general premise, subsurface conditions that dictate the use of steel piles will not be conducive to the development of a true point of contraflexure in the pile. Accordingly, it is Division of Structures policy to consider the piles in a steel pile bent as columns pinned at the pile tip. For analysis, the tip may be assumed as fixed against lateral translation but free to rotate when subjected to a bending moment.[5]

Depending on the design; some frame stiffness may be developed by the connection at the top of the pile. For example, if the piles are welded to a steel cap, the connection will be fixed; however, the degree of rotational restraint provided by the cap and the extent to which the fixed connection will influence pile stiffness are not readily determined. In view of the indeterminate nature of the problem, the piles should be assumed as pinned at the top, as well as the tip, when making the frame analysis.

The absence of pile fixity will have a significant effect on frame stability, since all horizontal forces must be resisted by the bracing system. Therefore, when investigating the ability of the bracing to prevent frame collapse, the horizontal force produced by vertical load eccentricity (pile lean) must be added to the collapsing force generated by the horizontal design load to obtain the total horizontal force to be resisted by the falsework bracing system.

Depending on their configuration, steel pile bents may provide little or no inherent resistance to overturning. Accordingly, overturning resistance will be an important consideration, since the frame must be stable against overturning as well as stable against collapse. (See Chapter 5 for stability considerations.)

When investigating overturning stability, any theoretical uplift resistance provided by the piles will be neglected.

Evaluating the adequacy of steel pile bents involves the consideration of factors that are not subject to precise analysis; consequently, some subjective judgment is required. In view of this, the falsework drawings should not be approved until the engineer is satisfied that the design assures frame stability under all anticipated loading conditions.

---

[5]The procedures used by the Division of Structures for analysis of timber pile bents were developed empirically from an evaluation of the actual load-carrying capacity of timber piles, and thus they are not applicable to steel pile bents.

# CHAPTER 8. TRAFFIC OPENINGS

## 8-1.01 Introduction

The specifications include special requirements which apply only to falsework which is over or adjacent to traffic. These requirements are included to ensure higher standards of design and construction at locations where public safety is involved.

## 8-1.02 Horizontal and Vertical Clearances

The minimum width and height of each opening to be provided through the falsework will be shown in the special provisions.

When checking horizontal clearances, keep in mind that the "width" of a vehicular opening is the distance between the temporary railings. The clear distance between falsework posts will be considerably greater than the width shown in the special provisions.

For a vehicular opening, no portion of the falsework may encroach into the "clearance zone" established by a vertical plane located three inches behind the back edge of the temporary K-rail at its base and extending upward to a horizontal plane at the top of the rail, and a second vertical plane located nine inches behind the first plane and extending from the horizontal plane at the top of the rail upward to the falsework stringer. See Figure 8-l.

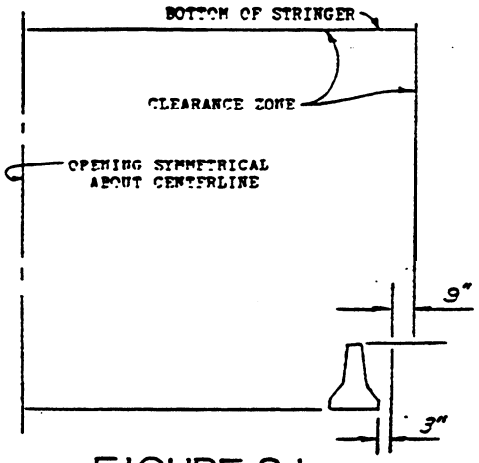


FIGURE 8-1

When checking vertical clearances, keep in mind that deflection of the falsework stringers under the dead load of the concrete will reduce the theoretical clearance, and this must be considered in the falsework design.

## 8-1.03 Requirements at Traffic Openings

The special requirements discussed in this section apply to falsework openings for both highway and railroad traffic. Additional requirements which apply only to railroad openings are discussed in the following section.

Each falsework post must be mechanically connected to its supporting footing or otherwise laterally restrained so as to withstand a 2000-pound force applied at the base of the post. When administering this specification, the term "supporting footing" will be interpreted as meaning the element of the falsework system that is set on the ground.

The 2000-pound force will be applied at the base of each post regardless of its size, spacing or, loading; however, it will be assumed as acting on only one post at a time. Lateral restraint must be effective parallel to and also away from the roadway or railroad track. For a bent in a highway median, restraint must be effective in all four directions.

Many contractors prefer to adjust falsework to grade by wedging or jacking at the bottom of a falsework bent, rather than at the top. In such designs, two or more posts will be supported by a bottom cap of sill beam which, in turn, will be supported by wedges or jacks set on the falsework footing. See Figure 8-2.

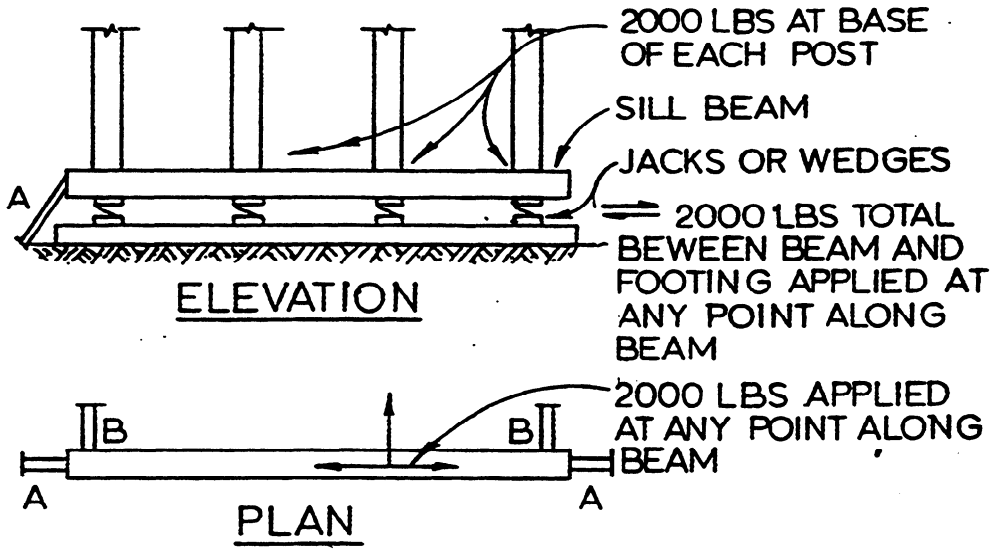


FIGURE 8-2

## TRAFFIC OPENINGS

When any type of "double-sill" is used at the bottom of a falsework bent adjacent to traffic, each post anchor must be designed to resist the 2000-pound force. Note, however, that the design force does not accumulate along the sill beam, so the connection between the beam and the falsework footing need resist only 2000 pounds total, regardless of the number of posts supported. Note also that a single point of restraint will not provide adequate resistance in the transverse direction (2000-pound force applied perpendicular to the beam) unless the connection is capable of resisting moment as well as shear. As a practical expedient, then, the sill beam must be restrained at both ends, and both connections must be designed to resist (transfer) 2000 pounds.

As an alternative means of providing lateral restraint, the 2000-pound force may be carried from the sill beam directly to the ground in the manner shown at A and B in Figure 8-2.

Each falsework post must be mechanically connected at its top to the falsework cap, and the connection must-be designed to resist a lOOO-pound force acting in any horizontal direction.

When double caps are used at the top of a falsework bent, they must be connected or restrained in some manner to prevent differential movement in both the longitudinal and transverse directions. The total force to be applied to each pair of caps is 1000 pounds, regardless of the number of posts in the falsework bent. Note, however, that the lOOO-pound force is actually a couple since it acts simutaneously in planes at the top of the lower cap and the bottom of the upper cap. Therefore, when analyzing the connection between double caps, it is necessary to consider moment as we11 as shear to ensure the stability of the double-cap system.

For falsework over traffic, the specifications require certain stringers to be mechanically connected to the falsework cap. The connection must be capable of resisting a force in any direction, including uplift, of not less than 500 pounds. These connections must be installed and functional before traffic is permitted to pass under the falsework span.

Details showing the connection between stringer and cap, cap and post, and post and footing, must be shown on the falsework drawings. Such details will be reviewed for contract compliance in the same manner as all other details of the falsework design, except that a load duration factor of 2.0 (for impact loading) may be used to determine the allowable value of nails and bolts used in the connection. However, other connection components must be so designed that the specified maximum allowable stresses in bending, shear and bearing are not exceeded.

The specifications require bolted connections when timber members are used to brace falsework bents adjacent to traffic. This requirement applies to bracing in the longitudinal as well as the transverse direction. Also, when timber members are used as longitudinal bracing, the brace must be bolted at both ends. It is not acceptable practice to use a bolt at one end of a brace and nails or lag screws at the other end.

All components of the falsework system which contribute to horizontal stability and resistance to impact, except for bolts in bracing, must be installed at the time each element of the falsework is erected. Therefore, friction cannot be considered as contributing to the strength of the connection, at either the top OF the bottom, because frictional resistance is not developed until a load is applied.

The provision that bolts need not be installed when the falsework is erected is included in the specifications to facilitate adjusting of the falsework to grade. However, if the contractor elects to use nails in lieu of bolts as a temporary expedient, the nailed connection must be shown on the falsework drawings, and the connection must be designed to resist either the theoretical wind load or two percent of the total dead load to be supported while the connection is in use, whichever results in the larger force.

When nails are used as a temporary connection to facilitate grade adjustment, they should be replaced by bolts as soon as feasible, and in any case prior to placing concrete.

The vertical load used for the design of posts and towers which support falsework over traffic openings must be increased to at least 150 percent of the load calculated in the usual manner. This "modified design load" is used to determine the stresses in vertical load-carrying components in the falsework bent, but it will not be applied to caps or footings, nor will it be used to check soil pressure.

In the case of towers, the modified design load will be applied to all tower legs when the end reaction of the member over traffic is distributed through a cap system to all legs, as shown in falsework Tower A in Figure 8-3. If the entire end reaction is carried by the tower legs adjacent to traffic, then the modified design load is applied only to those legs. See Tower B.

If the load on falsework adjacent to or over a traffic opening will be increased by load-transfer due to prestressing, the

design vertical load for posts and towers will be either the actual (unmodified) load plus the additional load due to prestressing or 150 percent of the actual load, whichever is larger.

The "modified design load" requirement is included in the specifications because both theory and experience have demonstrated that the downward force exerted by the bridge superstructure does in fact increase after the deck concrete is placed. The increased force is the result of deck shrinkage during the curing period; consequently, it will be larger at falsework bents located near the center of the bridge span than at bents near the abutments or columns. Furthermore, the increased force is of greater concern in the case of cast-in-place prestressed structures (which have little load-carrying capacity until tensioned) than in conventionally-reinforced concrete structures.*

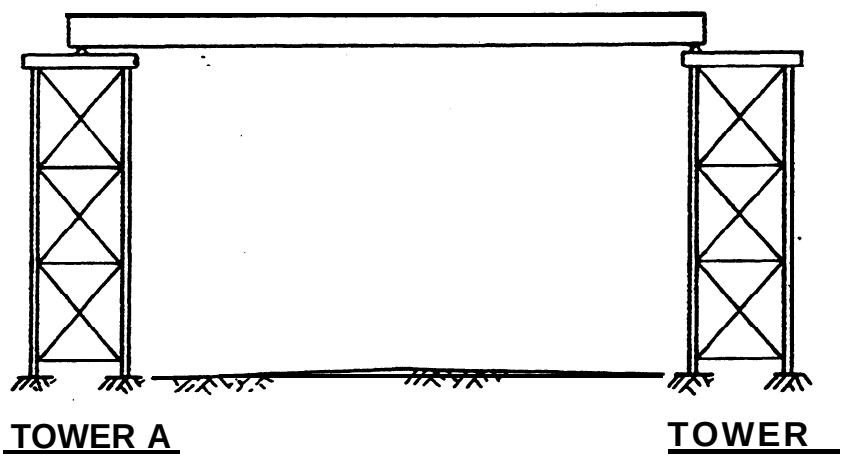


FIGURE 8-3

---

* As a point of interest, field research conducted some years ago revealed that -- depending on falsework configuration, type of structure and construction sequence -- the maximum load imposed on the falsework varied from as little as 110 percent to as much as 200 percent of the load measured approximately 24 hours after deck concrete placement. Maximum load was reached in four to seven days. The 150 percent figure in the specifications is a compromise which recognizes that some increase will occur in virtually all instances.

While the falsework system as a whole will remain relatively stable as the downward force increases, individual components may not. In any falsework design, vertical members are the least stable elements in the system and therefore the most vulnerable; consequently, the specification directly addresses posts and towers. This is not to say, however, that other members will not be affected, since the increased load must be carried from the bridge soffit to the ground through all components of the falsework bent. The engineer should be aware of this and look for points of potential instability. As an example, the method of grade adjustment should be scrutinized, particularly where a double-cap system is used. Wedges will remain stable under the added load; screw jacks may not.

Stresses calculated by applying the modified design load may not exceed the allowable stresses listed in the specifications.

When pipe-frame of tubular steel components are used as falsework shoring adjacent to a traffic opening, either as individual posts or as legs in a tower bent, the specified minimum section modulus for steel columns will apply to the post or tower leg, but not to the screw jack extension.

Finally, the specifications require the installation. of temporary bracing during erection and removal of any falsework whose height exceeds its clear distance to either the edge of any sidewalk or shoulder of any roadway which is open to the public, or to a point 10 feet from the centerline of any railroad track. When administering this specification, keep in mind that while wind loads are to be considered in the design, the basic requirement is that the bracing must be adequate to "withstand all loads imposed". Under the specifications, then, the contractor must determine the design load, which may not be less than the specified wind load for the height of falsework under consideration.

Details showing the temporary bracing, or other means of support provided to meet the intent of the specifications, must be shown on the falsework drawings. Such details are a part of the falsework design and must comply with all contract requirements even though the bracing or other means of support may be only "temporary" restraining devices.

## 8-1.04 Additional Requirements at Railroad Openings

The design of falsework which is over or adjacent to railroad traffic must comply with all of the special requirements for falsework at traffic openings and, in addition, must meat other requirements which are unique to railroad openings.

## TRAFFIC OPENINGS

The principal design requirement is that bracing for falsework bents located within 20 feet of the track centerline must be designed to resist the assumed horizontal load or 5000 pounds, whichever is greater. This requirement applies to both transverse and Longitudinal bracing. In the specification context, the term "bent" means t-he overall length of the falsework bent regardless of the number of posts used. As a point of information, the 5000-pound load will govern the design only in the case of relatively narrow structures where the bent consists of about five, or fewer, falsework posts.

When the 5000-pound load governs the design, the duration of load factor in the connector analysis is determined as follows:

If in the absence of the 5000-pound design load requirement, the design would have been governed by the wind load, a duration-of-load factor of 1.33 may be used.

In all other cases the factor will be 1.25, unless the anticipated duration of load dictates the use of a lower factor.

The design of falsework at railroad openings is subject to review and approval by the railroad company involved. To expedite approval, falsework drawings submitted for railroad company review should conform to the following procedural requirements:

All design and construction details must be shown. If a reference is made to a standard plan or to a detail shown on a previously submitted drawing for another structure in the contract, such plans or drawings must accompany the submittal to the railroad.

When submitting only that portion of the falsework which is over or adjacent to the railroad, details of the adjacent falsework spans must be shown, as these spans will affect the design of the bents at the railroad opening.

Design features or details for snore than one structure should not be shown on the same drawing.

The drawings should include a sketch showing the location of the temporary minimum horizontal and vertical clearance to the falsework.

Soffit and deck overhang forming details should be included.

For timber construction, all connections must be made with bolts. The use of coil rods or threaded rods in place of bolts of the same diameter is not permitted at railroad openings.

When timber stringers are used, the railroad will require solid end blocking, regardless of the height-to-width ratio of the timber stringers.

The drawings must include a note stating that collision posts will be provided as per the contract special provisions, but post details need not be shown.

To ensure that the Office of Structure Construction is fully informed of all matters relating to falsework over a railroad facility, correspondence to and discussions with the railroad company must be handled by the Falsework Review Section in the Sacramento office. Neither bridge field personnel nor contractor personnel are authorized to communicate directly with the railroad.

Restricted temporary horizontal and vertical clearances require Public Utilities Commission approval. The bridge engineer should make certain PUC Approval has been granted before approving the falsework drawings.

# CHAPTER 9. INSPECTION

## 9-1.01 Introduction

The field engineer's role during the construction phase is one of inspection of the falsework as it is erected to ensure that construction is in accordance with the approved falsework drawings, that only sound materials are used and quality workmanship employed, and that all specific specification requirements are met. (However, keep in mind that inspection by the engineer does not relieve the contractor of his contractual responsibility for the falsework.)

Timely inspection is essential. Any noted deficiencies, such as construction which does not conform to the approved falsework drawings, poor workmanship, or the use of unsound or poor quality materials, should be brought to the contractor's attention at once. If the contractor fails to take corrective action, a confirming letter should be written. The letter should list the deficiencies that require remedial action but specific corrective measures should not be ordered, nor should any predictions be made.

## 9-1.02 Falsework Erection and Removal Plans

The specifications require the use of construction methods, including temporary bracing when necessary, to prevent the overturning or collapse of the falsework during each. phase of erection and removal. The means by which the contractor complies with this specification requirement is commonly referred to as the "erection" or "removal" plan.

Before falsework erection begins, the erection plan should be discussed with the contractor's field representative who will be responsible for supervising the erection work. The purpose of this policy requirement is to ensure that the erection plan is appropriate for the site and conditions to be encountered, and that all persons involved with the work (both contractor and State) are familiar with the erection plan.

A similar discussion with contractor personnel is required before the falsework is removed. (See Section 9-1.16, Falsework Removal.)

## 9-1.03 Foundation Pads and Piles

The specifications permit the contractor to set falsework pads and drive falsework piles before the falsework drawings are approved. However, in accordance with Division policy, pad placement and pile driving are to be inspected, to the extent necessary to ensure an adequate foundation, at the time the work is done, even though the drawings may not yet be approved.

## 9-1.03A Pad Foundations

Since pad design is based on anassumed soil bearing value, the foundation material should be inspected before the pads are set and a realistic soil bearing value assigned. Timely inspection is necessary to ensure that the assumed value does not exceed the actual soil bearing-value as determined by observation or soil load test.

Appendix B includes soil classification charts. for both sandy and clayey soils. These charts may be used to approximate the actual soil bearing value for a given soil.

To ensure uniform soil bearing, falsework pads must be level and set on material that provides a firm, even surface free of humps or depressions within the pad bearing area. If necessary to obtain uniform bearing, a thin layer of sand may be used to fill in surface irregularities.

When pads are set on material backfilled around piers and columns in stream channels or other locations where there are no specific compaction requirements, care must be taken to ensure that the backfilled material is sufficiently compacted to provide the required soil bearing value.

Benches in fill slopes should be cut into firm material, with the pad set back from the edge of the bench.

Continuous pads should be inspected to verify that joints are located as shown on the approved drawings.,.or if not so located, that the joint location meets Division of Structures criteria. (See discussion in Chapter 7.)

The soil bearing capacity of some soils is greatly reduced when the ground becomes saturated. To prevent loss of support, pad foundations should be protected from flooding and/or undermining from surface runoff, and the pad area should be self-draining.

## 9-l.03B Soil Load Tests

The specifications require the contractor, when requested by the engineer, to " ...demonstrate by suitable load tests that the soil bearing values assumed for the design of the falsework do not exceed the supporting capacity of the soil." (Standard Specification 51-1.06B, Falsework Construction.) Accordingly, the engineer should request a load test if there is uncertainty as to the ability of the foundation material to support the loads to be imposed.

Note that the specifications require suitable load tests. In the specification context, the term "suitable" is interpreted to mean static load tests that consider both settlement and

duration of load, but which are simple in their application and thus may be performed by the contractor. Division policy does not require a sophisticated load test of the type that might be performed by a geotechnical testing facility or soils lab.

Appendix B includes general information and testing procedures for simple, static load tests to determine soil bearing values. Appendix B should be reviewed prior to the performance of any load test made to verify the adequacy of falsework foundation materials.

The Structures Foundation Unit at the Engineering Service Center in Sacramento is available for consultation and advice as to the suitability of a particular load test in a given field situation, as well as interpretation of test results.

### 9-1.03C Sand Jacks

Sand jacks, which consist of compacted sand physically confined within a timber or metal frame, are often used to facilitate falsework removal.

To prevent inadvertent settlement while a sand jack is still carrying a load, care must be taken to ensure that the sand will be protected from rain or flooding, or any other cause that might contribute to premature erosion of the sand. To ensure their integrity, sand jacks are normally constructed so the annular space between the top bearing plate and the side plates or frame does not exceed about l/4-inch.

### 9-1.03D Falsework Piles

Division policy requires the falsework pile driving operation to be inspected to the extent necessary to verify that the required bearing values are obtained.

The pile bearing value required to support the design load will be shown on the falsework drawings. Pursuant to specification requirements, bearing values for falsework piles are determined by the ENR pile driving formula. Use of the ENR formula and inspection procedures will be the same for falsework piles as for permanent piles, unless a drop hammer is used. The use of drop hammers is discussed in the following section.

If the falsework design includes timber pile bents, the design will be based on certain assumptions as to penetration, driving tolerances (i.e., maximum allowable pile pull and pile lean) and the ground line pile diameter, all of which should be shown on the falsework drawings. Timber pile bent designs require continuous inspection as the piles are driven to assure that the design assumptions are met. This is the case because pile

penetration cannot be verified by observation after the pile has been driven, and the distance a given pile has been pulled cannot be determined once the pile is in its final position under the cap.[1]

Driving tolerances are particularly critical in pile bent designs. If little or no tolerance is permitted by the falsework design, this fact should be brought to the contractor's attention before driving begins.

9-1.3D(l) Drop Hammers

Although the specifications prohibit the use of drop hammers for permanent work, there is no similar restriction for piles used in temporary construction facilities. Accordingly, drop hammers may be used to drive falsework piles, as provided in this section.

Drop hammers must weigh at least 3000 pounds, and should be equipped with leads and hoisting equipment that is adequate to handle the work efficiently. The hammer fall-distance should not exceed about 10 feet.

For drop hammers, the ENR formula is:

$$P = \frac{2WL}{s+1}$$

where P is the safe load, in pounds; W is the weight of the hammer, in pounds; L is the hammer fall, in feet; and s is the penetration per blow, in inches, averaged over the last few blows.

Unless the hammer weight is clearly evident, the contractor should be required to substantiate the weight used in the bearing calculations.

[1] Chapter 7 includes a discussion of the assumptions that govern the design of timber pile bents, and their relative importance.

## 9-1.04 Timber Construction

Wood differs from other building materials in that it is organic in nature, nonhomogeneous, and composed of tube-like cells many times longer than they are wide. The cellular structure of wood fibers along with natural defects that develop as a tree grows are factors which result in a wide variation in the physical properties and characteristics of cut lumber.[2]

Timber falsework materials should be inspected for damage as they are delivered to the work site. Used timbers should be examined for evidence of mechanical damage, decay or distortion of shape, and defective or substandard pieces rejected.

Rough sawn timbers should be measured to determine their actual dimensions. Unlike surfaced material, the dimensions of rough-cut timbers are not uniform from piece to piece. The variation may be appreciable, particularly in the larger sizes commonly used for falsework posts and stringers. If the actual dimension is smaller than the dimension assumed in the design, the member may not be capable of carrying the intended load without over-stress.

## 9-1.04A Connections in Timber Framing

Connections in timber framing for falsework bents and similar locations where engineered connections are required shall be fabricated in accordance with industry guidelines as summarized in this section.

### 9-1.04A(l) Bolted Connections

End and edge distances are measured from the end or side of the wood member to the center of the bolt hole, and must be equal to or greater than the following minimums:

- For parallel-to-grain loading, the required end distance is 7 bolt diameters for members in tension and 4 bolt diameters for members in compression.
- For perpendicular-to-grain loading, the required end distance is 4 bolt diameters.
- For parallel-to-grain loading in tension or compression, the required edge distance is 1.5 bolt diameters.

---

[2] A comprehensive discussion of the physical properties and characteristics of wood as a structural building material may be found in Appendix A.

- For perpendicular-to-grain loading, the edge distance toward which the bolt is acting shall be at least 4 bolt diameters and the distance on the opposite edge shall be at least 1.5 bolt diameters. When stress reversal will occur, 4 bolt diameters are required at both edges.

The minimum spacing between two bolts in a row is 4 bolt diameters, measured center-to-center of the holes.

Bolt holes and installation must conform to the following:

- Bolt holes shall be a minimum of l/32-inch to a maximum of l/16-inch larger than the bolt diameter.
- Holes in the main and side members shall be aligned and the bolt centered in the hole. Tight fit requiring the forcible driving of bolts is not recommended industry practice.
- A washer or metal plate not less than a standard cut washer shall be placed between the wood and the bolt head and between the wood and the nut.

Design values for bolted connections apply to bolts that have been snugly tightened. To ensure adequate strength, connections should be inspected after the falsework is adjusted to grade, and bolts retightened if necessary.

9-l.O4A(2) Lag Screw Connections

As provided by industry guidelines, edge and end distances in lag screw connections must conform to the requirements for bolted connections made with bolts having a diameter equal-to the shank diameter of the lag screw used.

Lag screws shall be inserted in predrilled holes conforming to the following:

- The clearance hole for the shank shall have the same diameter as the shank, and the same depth of penetration as the length of unthreaded shank.
- The diameter of the lead hole for the threaded portion shall be between 60 and 75 percent of the shank diameter, with the larger percentage applying to lag screws having larger diameters.[3] The length of the lead hold shall not be less than the length of the threaded portion.

---

[3]The percentage range shown is for Douglas Fir-Larch. For appropriate ranges for other wood species, contact the Office of Structure Construction in Sacramento.

Lag screws are to be inserted in the lead hole by turning with a wrench, not by driving with a hammer.

To facilitate installation, soap or other lubricant may be used on the screw or in the lead hole.

9-1.04A(3) Drift Pins and Drift Bolts

Drift pins and drift bolts are to be driven into predrilled holes having a diameter l/16 inch less than the diameter of the drift pin or drift bolt to be installed.

9-1.QA(4) Nails and Spikes

For nailed or spiked connections, the falsework drawings will show the number of fasteners required, but fastener placement usually is not detailed on the drawings. The industry guideline is that end distance, edge distance and spacing must be sufficient to prevent splitting of the wood; however, the Division of Structures has established more specific guidelines to govern fastener placement for falsework on State highway projects. The Division's guidelines may be found in Chapter 4, Section 4-3, and should be reviewed before construction begins. Fastener placement for connections made with nails or spikes must conform to the Division's guidelines.

There are specific penetration requirements for nails and spikes, as shown in Tables E-4 through E-7 in Appendix E. In most cases obtaining the penetration required to develop the design value of a given fastener will not present a problem. However, when round posts are used or when longitudinal bracing on skewed bents is not parallel to the side of a square post, care must be taken to ensure that the penetration assumed in the design is actually obtained, since nails or spikes having less than the required minimum penetration will have no allowable load-carrying capacity.

9-1.04B Timber Workmanship Checklist

The following checklist may be used as a guide to points that warrant special consideration:

- Posts must be plumb and centered over the pad or corbel.
- Posts may be wedged at either the top or bottom for grade adjustment, but not at both locations.
- For larger post loads; the design will often provide for two or more sets of wedges (set side-by-side) to keep the perpendicular-to-grain compression stresses within the allowable. In some cases only one set will be installed initially, with the remaining set(s) installed after the

falsework is adjusted to final grade. Such installations should be inspected after adjustment to grade, to ensure that all required wedges are in place.

- Particular attention should be given to falsework bents where grade adjustment is provided at the bottom of the posts. Since any differential vertical movement of posts within a bent may induce undesirable stresses into the frame, the diagonal bracing should be inspected after the falsework is adjusted to grade for evidence of deflected braces and/or distortion at the connections.

- Blocking should be kept to the minimum amount needed for erection and adjustment. It is poor workmanship to extend a short post by piling up blocks and wedges, since this can lead to a condition of instability.

- Full bearing must be obtained at all contact surfaces. Deficiencies in this respect may be improved by feather wedging; however, if the joint requires more than a single wedge, extra care should be taken to ensure that full bearing is obtained.[4]

- The ends of spliced posts must be cut square, with proper size splice plates, and nails must be of the proper size, pitch and edge distance.[5]

- Jacks used for grade adjustment must be plumb and not extended beyond the distance recommended by the jack manufacturer, and the load should be centered over the jack.

- Soffit plywood sheets should be set with the face grain perpendicular to the joists with abutting ends of the sheets supported on a common joist.

- Telltales should be attached to the joists, and located as close as possible to the supporting bent cap or post. The number of telltales used must be adequate to determine the settlement at any location over the entire falsework.area.

---

[4] Cedar shingles, which are occasionally used as wedges, should be used with caution since cedar has a significantly lower cross-grain strength than Douglas Fir or any of the commonly used hardwoods.

[5] The need for a post splice should have been anticipated and the proposed splice detail shown on the falsework drawings. If this is not the case, the contractor must submit a detail for approval. (See Falsework Memo C-8 for information on design of splices in timber posts, and an example problem.)

## 9-l.05 Structural Steel

Used beams, and particularly beams salvaged from a previous commercial use, should be examined carefully for loss of section due to welding, rivet or bolt holes, or mechanical damage (kinks or notches in flanges, etc.), all of which may reduce the load-carrying capacity of the beam.

If the falsework design is based on the higher working stresses allowed for grades of steel other than Grade A36, the contractor must furnish substantiating mill test reports and a Certificate of Compliance. The Certificate of Compliance shall be signed by the contractor, and shall list and describe the beams covered by the mill test reports.

### 9-1.05A Welded Splices in Falsework Beams

Occasionally, a longer steel beam will be fabricated by welding together two shorter beams of the same cross-section.

For spliced beams, if the welding is performed at the site or at a nearby location closely related to the work, such as the contractor's yard, the splices shall be made by full penetration butt welding of the entire cross section in conformance with applicable requirements in AWS D1.1, *Structural Welding Code -- Steel..*

For previously welded beams, the splices should be visually inspected for obvious defects; however, radiographic inspection of other methods of nondestructive testing will not be required unless there is evidence of defective welding.

### 9-l.06 Manufactured Assemblies

The term "manufactured assembly" as it is used in the falsework specifications means any commercial product or device the use of which is governed, in whole or in part, by conditions or limitations imposed by the manufacturer. Typical manufactured assemblies include jacks, beam hangers, overhang brackets and similar commercial products, and all commercial shoring systems.

When a manufactured assembly is used in the falsework, the contractor must furnish a written certification stating that all components of the assembly are used in accordance with the manufacturer's recommendations. The certification may be signed either by the contractor or by the engineer (or representative) who signs the falsework construction certification required by the Construction Safety Orders. (See Section 9-1.13, Cal-OSHA Requirements.)

A separate certification is required for each product or device used in the falsework.

## 9-l.07 Metal Shoring Systems

The safe load-carrying capacity of all commercially available shoring systems is based on the use of new components, or used components in good condition, properly erected in conformance with the manufacturer's recommendations. Consequently, proper inspection is of particular importance to ensure-the adequacy of the completed system.

Shoring components should be inspected prior to erection. Any component that is heavily rusted, bent, dented or otherwise defective, should be rejected, as should any fabricated unit in which individual members are bent, dented, twisted or broken, or where the welded connections are cracked or shows evidence of rewelding.

A base plate, shore head or screw jack extension device should be used at the top and base of all tower legs. All base plates, shore heads or extension devices must be in firm contact with the footing at the base and the cap at the top.

Vertical components should fit together evenly, without any gap between the upper end of one unit and the lower end of the other unit. Base plates and shore heads or extension devices must fit into the tower legs. Any component that cannot be brought into proper contact with the component into or onto which it is intended to fit should not be used.

Shore heads and extension devices must be axially loaded, since shoring components are not designed to resist eccentric loads.

All locking devices on frames and braces must be in good working order. Coupling pins must bring the frame or panel legs into proper alignment, and pivoted cross-braces must have the center pivot in place.

Shoring must be plumb in both directions. Refer to technical data sheets issued by the manufacturer for the maximum allowable deviation from true vertical. If this deviation is exceeded, the shoring must be readjusted to meet the limit.

When a shoring system is used, the contractor must furnish a certification that the use of the shoring is in accordance with the manufacturer's recommendations. (See Section 9-1.06, Manufactured Assemblies.) Field engineers should keep in mind that this certification is a Standard Specification requirement, and is in addition to the falsework certification required by the Construction Safety Orders. (See Section 9-1.13, Cal-OSHA Requirements.)

## INSPECTION

When a commercial shoring system is used for falsework, review and approval of the design will be based on a particular system; i.e., WACO, PAFCO, etc. While the various systems have many similar components, they are not intended to be interchangeable between systems. Accordingly, field engineers should make certain that the *system* furnished is the system shown on the falsework drawings and further, that all system components are part of the approved system unless intermixing of components is authorized by all manufacturers whose components are used in the falsework, as discussed in the following paragraph. [6]

In any case where system components are to be intermixed, the contractor must obtain and furnish a letter of approval of such intermixing from each manufacturer whose system components are to be incorporated into the falsework. Each letter must state that the use of components from the other system(s) will not reduce either shoring capacity or the required safety factor. (For example, if PAFCO shoring is shown on the falsework drawings but some WADCO bracing components are to be used with the PAFCO shoring, the contractor must obtain letters from both PAFCO and WADCO expressly stating that such intermixing will not reduce the nominal capacity or safety factor of their system.) [7] The procedure discussed in the preceding paragraph assumes that most of the component elements of the shoring will be components of the system shown on the approved falsework drawings. If, however, the majority of the system components to be assembled and erected are not components of the system shown on the falsework drawings, this occurrence will be considered a de facto change in the falsework design which will negate the previous approval of the drawings. New or revised -drawings and technical data for the system actually intended for use must be submitted for review and approval before the shoring may be erected.

---

[6] The recently issued FHWA *Construction Handbook for Bridge Temporary Works* notes that there are no industry standards for the various components of proprietary shoring systems in use today, and concludes that components produced by different manufacturers should not be intermixed. Division of Structures policy recognizes that the manufacturers of the various systems are in the best position to evaluate the effect of intermixing system components, and permits such intermixing if approved by the manufacturers of the intermixed systems.

[7] Note that these approval letters are in addition to the certification required by the specifications, as discussed in Section 9-1.06, Manufactured Assemblies.

## 9-1.08 Miscellaneous Field Welding

Fillet welds in job-fabricated devices or installations of any kind, including bracing and connections, may be accepted on the basis of casual inspection, provided the design value of the fillet weld is not more than 1000 pounds per lineal inch for each l/S-inch of fillet weld.

For fillet welds requiring a higher design value, or for any connection or other installation requiring a butt weld, the welding must be performed in conformance with the requirements in AWS D1.1, *Structural Welding Code -- Steel.*

## 9-1.09 Powder Driven Nail Anchorages

Section 51-1.05, Forms, of the Standard Specifications permits the use of driven type anchorages to fasten forms to interior surfaces of girder stems in prestressed box girder bridges where the reinforcing steel clearance is 2 inches or more.

The specification contemplates the use of nails driven with low velocity powder driven hammers operated in accordance with the manufacturer's recommendations. Such powder driven nails have a shear value of 400 pounds, provided they are installed in conformance with the following criteria:

- Hammers must be perpendicular to the concrete surface when the nail is driven. Hammers are to be operated only by qualified persons possessing valid evidence (current card or other documentation) of certification for the work.

- Nails to be used with wood members of l-l/2 inch thickness will be approximately 3 inches long. Nails must penetrate the concrete at least l-3/8 inches.

- The nail shear value will be reduced for any nail where the head penetrates more than l/8 inch into the wood or where the head is l/8 inch or more above the wood surface. The reduction shall be 25 percent (100 pounds) for each l/8 inch increment of length in excess of the l/8 inch limiting length. A corresponding reduction will be made for nails driven into air pocket voids.

- Nails shall not be driven within 3 inches of any concrete edge, nor within 3 inches of visible cracks in the concrete surface.

- Minimum end and edge distances for wood members shall not be less than required by Division policy for nailed connections. (See Chapter 4.) Nail spacing shall not be less than 6 inches.

## 9-1.10 Cable Bracing Systems

Cable bracing systems require thorough inspection to ensure that the type of cable used and the field installation conform to the details shown on the approved falsework drawings.

Prior to installation, the cable should be examined to verify that the size and type of the cable and its condition (new or used) is consistent with design assumptions. Used cable should be inspected for strength-reducing flaws. The use of obviously worn, frayed, kinked or corroded cable should not be permitted.

Cables must be looped around an appropriately sized thimble (or equivalent diameter steel pin) as recommended by the cable manufacturer.[8]

The following tabulation may be used to determine the required thimble diameter for a given cable size:

| Cable Diameter | Approximate Standard Thimble Diameter |
|---|---|
| l/4 (Inches) | 11/16 (Inches) |
| 3/8 | 15/16 |
| 1/2 | l/8 |
| 5/8 | 1 3/8 |
| 3/4 | 1 5/8 |
| 7/8 | 1 7/8 |
| 1 | 2 l/2 |

Cables looped around thimbles (or around an equivalent diameter anchoring device) are usually connected to the working part of the cable by Crosby-type wire rope clips. Clip installation should be carefully inspected, since properly installed clips are critical to the effectiveness of a cable system.

Table 4-3 (in Chapter 4) shows the proper method of installing Crosby clips. Additionally, keep in mind that although the efficiency factor for Crosby clips is 80 percent, this value is valid bnly when the clip is properly torqued in accordance with the manufacturer's recommendation.[9]

---

[8]Division policy provides for an exception to this general requirement in the case of cable looped around a timber cap where wood crushing will form an adequate radius for the cable connection. This exception, however, applies only to temporary bracing used during erection and removal, and permanent bracing used to event overturning in the longitudinal direction.

[9] Tests to system failure have shown that clips that are not properly torqued will slip before the cable breaks.

To ensure adequate holding strength, field engineers should review the clip installation procedure recommended by the manufacturer before work begins.[10]

As shown in Table 4-3, forged clips have greater holding strength, so fewer clips are required for a given installation. Forged clips are marked "forged" for positive identification, and have the appearance of galvanized metal, whereas malleable cable clips appear smooth and shiny.

The method by which the cable will be attached to the falsework and the location of attachment will be shown on the falsework drawings. No deviation should be permitted.

9-1.10A Preloading Cable for Internal Cable Bracing Systems[11]

When cable is used as diagonal bracing to prevent the collapse of a falsework bent, the cables must be preloaded to remove any slack in the cable and connections. Preloading is necessary to ensure that the cable units (i.e., all cables acting to resist forces in the same direction) will act elastically when loaded.

The required preload values for all cable units will be shown on the falsework drawings.

Applying the preload force is an essential part of the cable system installation, and the contractor must provide a means to verify or demonstrate that the required preload force has been applied. A method used by some contractors determines the preload force by measuring the elastic elongation within a short length of the cable. Measurements are made between tape bands placed around the cable to be preloaded. Measurements between the tape bands should be done after removal of any initial slack and again after the cable unit has been preloaded.[12]

When this procedure is used, keep in mind that the elongation calculation must be based on the reduced value of E, since the

---

[10] The contractor should be requested to furnish technical information from the manufacturer showing the installation procedure, recommended torque values, and other pertinent data prior to beginning erection of any cable system.

[11] The term "cable" as used in this section includes prestressing strand when prestressing strand is used as internal cable bracing.

[12] The term "initial slack" refers to excessively large loops at the connections or any excessive drape remaining the cable after installation. The initial slack must be taken up before the preload force is applied.

preload force represents only a small percentage of the cable strength. In addition, unless a prestretched cable is being used, constructional stretch may be a factor for consideration as well. (See "Determining Cable Elongation" in Chapter 4.)

The contractor may employ other methods to demonstrate that the correct preload force is being applied; however, the method must be accurate, readily verifiable, and must not rely on subjective considerations. Regardless of the method used, measurements to verify preload values are to be performed by the contractor in the presence of the engineer.

All cable units must be preloaded simultaneously to prevent frame distortion as the preload force is applied.

Preload tensioning devices must provide positive grip so that no cable movement will occur after final tensioning. Preloading can be done with turnbuckles or with come-a-longs. [13]

When cables are attached to timber members with an appropriate fastening device, the preload force must be applied twice. The first tensioning will permit the cable fastening device to bite into the wood. Following this initial tensioning, the cable should be unloaded and then retensioned to the required preload force. (Note that any additional wood crushing at the point of attachment will be minor and may be neglected in the analysis.)

Since preload force and cable drape are proportional for a given cable system, knowing the expected cable drape over a range of preload values gives the engineer a method by which the preload force actually applied may be approximated by visual inspection after the bent is erected. (For example, assume that for a particular cable a preload force of 500, 1000 and 1500 pounds results in a calculated drape of l-l/2, 3/4 and l/2 inches, respectively. From the relationship between drape and preload force, the engineer can readily determine the preload force actually applied.)

## 9-1.11 Traffic Openings

For falsework at traffic openings, the specifications require that components of the falsework system "...which contribute to horizontal stability and resistance to impact, except for bolts in bracing, shall be installed at the time each element of the falsework is erected and shall remain in place until the falsework is removed." (See Standard Specification Section 51-1.06B, Falsework Construction.)

---

[13] "Come-a-long" is a slang term for a Lug-all lever or ratchet hoist.

For administration of this specification requirement, Division policy provides as follows:

- The specification applies to the connections that provide lateral restraint at the base of the falsework post, to the connections at the top of the post between the post and cap, and to the connections between cap and stringer.

- The specification applies to permanent diagonal bracing (because such bracing contributes to horizontal stability) except that, at the contractor's option, connections may be nailed rather than bolted to facilitate adjustment of the falsework bent to grade. Nailed connections, when used in lieu of bolts, must provide the same capacity as the permanent bolted connection. The permanent bolted connection should be installed as soon as feasible.

- If traffic is being detoured during falsework erection, the components covered by the specification need not be installed as the falsework is erected. However, all such components must be installed before traffic is allowed to pass adjacent to or under the falsework.

Horizontal and vertical clearances should be measured to verify compliance with contract requirements as soon as the bents are erected and the beams set in place. Actual clearances should be recorded in the job records.[14]

Anticipated vertical clearance restrictions should have been reported to the District pursuant to the instructions in Bridge Construction Memo 2-ll.O. Any changes occurring as the falsework is erected should be reported immediately to the resident engineer and/or District permit engineer.

9-1.llA Falsework Lighting at Traffic Openings

General requirements for pavement and portal lighting at traffic openings, including openings for pedestrian walkways, are found in Section 86-6.11, Falsework Lighting, of the Standard Specifications. Any project specific requirements will be shown on the plans or included in the special provisions.

---

[14]Keep in mind that the actual vertical clearance provided when the falsework is first erected must included an allowance for beam deflection, and falsework settlement that will occur as the concrete is placed.

The contractor must submit a lighting plan showing all details of the falsework lighting system. The falsework lighting plan must be approved by the engineer before falsework construction at the traffic opening may be started?

The lighting plan should be reviewed from the viewpoint of public traffic, and for employee safety during routine maintenance work as well. (Keep in mind that the specifications do not permit closing of traffic lanes for routine maintenance of the lighting system on any roadway having a posted speed limit above 25 miles per hour.)

All features of the portal illumination, including plywood clearance markers, as well as pavement and pedestrian walkway lighting if required, must be in place and operational before any beams are set over the traffic opening.

As soon as the falsework is erected and the lights turned on, the lighted falsework opening should be inspected after dark to check the effectiveness of the lighting, and the lights moved or adjusted if necessary to provide uniform illumination. Nighttime inspection should continue periodically, as lights may be inadvertently moved or disturbed as construction continues. An inspection during adverse weather, such as rain or fog, is also advisable.

Temporary K-rail and all painted surfaces at the portal opening must be maintained in a clean, white condition. Repainting, if necessary, may be paid for as extra work.

## 9-1.12 Field Changes

As provided in the specifications, "...falsework shall be constructed to substantially conform to the falsework drawings." (Section 5l-l-06B Falsework Construction, of the Standard Specifications.)

Determining whether the falsework as actually constructed "substantially" conforms to the drawings is a matter of engineering judgment. As a policy consideration, minor deviations to suit field conditions or the availability of materials will be permitted if it is evident by casual inspection that the change neither increases the stress in, nor the deflection of, any

---

[15] The falsework lighting plan is not part of the falsework drawing-submittal covered by Section 51-1.06, Falsework, of the Standard Specifications. It is a separate submittal, which is reviewed-and approved pursuant to Standard Specification 5-l.02, Plans and Working drawings. However, if the lighting plan is shown on the falsework drawings, approval of the drawings will constitute approval of the lighting plan as well.

falsework member beyond the maximum value allowed, nor reduces the load-carrying capacity of the falsework system as a whole. Such changes need not be shown on revised drawings; however, they should be noted on the structure representative+ copy of the approved drawings.

If calculations are necessary to verify compliance with contract requirements, the change will be considered substantial and revised drawings, with calculations, will be required.

Revised drawings must be submitted for review in the same manner as the original drawings. In many cases the change can be shown on a simple sketch on letter size paper, while other changes, depending on their magnitude, may require total revision of an original drawing. Keep in mind that if a change is shown on a sketch; the sketch must be signed and stamped by a registered civil engineer, and that calculations are required in all cases.

Division policy provides that drawings or sketches showing changes made during construction will be given a high review priority, although contractually such changes constitute design revisions following approval, so that the review time allowed is the same as allowed for the original design review.

Work shown on a revised falsework drawing or sketch may not begin until that drawing has been approved by the engineer.

Any change in the approved falsework design, however minor it may appear to be, has the potential to adversely affect the structural integrity of the falsework system. Therefore, before approving any change, the engineer should ask, and then answer to his satisfaction, the question: "How does this change affect the falsework system as a whole?"

### 9-1.13 Cal-OSHA Requirements

Article 1503 of the *Construction Safety Orders* requires the contractor to obtain a permit to construct or remove falsework or shoring that is more than three stories high, This requirement is discussed in Chapter 2, and reference is made thereto.

Article 1717 of the *Construction Safety Orders* requires all falsework or vertical shoring systems to be inspected and certified prior to concrete placement. The certification must be in writing, and it must state-that the falsework, as constructed, substantially conforms to the working drawings and that the materials and workmanship are satisfactory for the purpose intended.

## INSPECTION

For falsework or shoring which exceeds 14 feet in height, measured from the top of the foundation to the superstructure soffit, or where the length of an individual span exceeds 16 feet, or where provision is made for the passage of vehicular or railroad traffic through the falsework or shoring, the required inspection and certification must be made by a civil engineer registered in California, or by his authorized representative.

For all other falsework; the inspection and certification may be made by any one of the following:

- a civil engineer registered in California.
- for shoring systems, a manufacturer's authorized representative.
- a licensed contractor's representative qualified in the usage and erection of falsework and vertical shoring.

Arranging for the required inspection and certification is the contractor's responsibility. When the falsework design is such as to require inspection and certification by a registered civil engineer, it is the contractor's engineer who assumes this responsibility. However, the structure representative will verify that the falsework has been inspected by examining the certificate and noting its existence in the project diary. It is not necessary to obtain a copy of the certification for the job records.

Inspection and certification of the falsework pursuant to the requirements in Article 1717 of the *Construction Safety Orders* does not relieve the contractor of any of his responsibilities under the contract for falsework construction, nor does it relieve the structure representative of his responsibilities with respect to contract administration. Even though the falsework is certified by the contractor's engineer or by other appropriate authority, the structure representative must satisfy himself that the falsework has been constructed in conformance with the approved falsework drawings before permitting the contractor to place concrete.

### 9-1.14 Inspection During Concrete Placement

As concrete is being placed, the falsework should be inspected at frequent intervals. In particular, look for the following indicators of incipient failure:

- Excessive compression at the tops and bottoms of *posts* and under the ends of stringers; crushing of wedges.
- Movement or deflection of diagonal bracing; distortion at connections; pulling of nails.

- Tilting or rotation of joists or stringers; excessive deflection of any horizontal member.
- Posts or towers that are bowing or moving out of plumb.
- Excessive settlement as indicated by telltales,
- The sound of falling concrete or breaking timbers; any unusual sound.

The specifications limit falsework settlement to a maximum of 3/8 inch deviation. from the anticipated settlement shown on the falsework drawings. Telltales should be monitored as concrete is placed, and should the actual settlement exceed the predicted settlement by more than the allowable deviation, concrete placement in the affected area should be discontinued and the cause of the excessive settlement investigated. Concrete placement should not be resumed until the engineer is satisfied that further settlement will not occur. (Keep in mind that settlement due to soil compression may continue for some length of time, even though the load is not increased.)

If settlement continues, or if inspection reveals falsework members in distress (such as crushing at joints, rotation or tilting of vertical members, or any similar indication of incipient failure) all concrete placement should be stopped immediately, and the falsework strengthened by the installation of supplementary supports, or by some other means.[16]

9-1.15 Inspection After Concrete Placement

Falsework inspection should not stop with concrete placement, but should continue periodically until the falsework has been completely removed.

One important and often overlooked point is the danger of curing water softening the falsework foundation. Some means should be provided to prevent curing water from reaching and soaking the foundation material beneath the falsework bearing pads.

The contractor should provide for drainage of rain or curing water that accumulates in the box girder cells. Such water in the cells could easily overstress the falsework or, if deep enough, the permanent structure as well.

---

[16] Reference is made to the Division's *Concrete Technology Manual* for a discussion of the factors to be considered when it becomes necessary to install an emergency construction joint.

## 9-1.15A Deck Shrinkage

Continuing inspection is particularly important in the case of post-tensioned structures because of the redistribution of dead load forces that occurs following the deck concrete pour. As the newly placed deck concrete shrinks during the curing period, the downward force exerted on the falsework by the bridge superstructure increases. The increase is greatest near the center of the structure span, and typically reaches its maximum from four to seven days after the deck concrete is placed.

The effect of deck shrinkage is of greater concern in cast-in-place prestressed structures than in conventionally reinforced concrete structures because post-tensioned structures have relatively little rigidity until they are stressed.

The effect of deck shrinkage is not addressed in the specifications, except indirectly for falsework adjacent to a traffic opening where the falsework posts must be designed to carry at least 150 percent of the theoretical load. However, field engineers should be aware of the potential problem and look for locations where the falsework may be adversely affected. [17]

## 9-1.16 Falsework Removal

Contract provisions governing falsework removal are found in Section 51-1.06C, Removing Falsework, of the Standard Specifications. This section contains specific benchmark criteria that must be met before any falsework may be released. In general, the falsework must remain in place for a specified time period, or until the concrete attains a specified strength, or for cast-in-place prestressed construction, until stressing (but not grouting) is completed.

Additionally, for continuous structures, the removal of falsework supporting a given span cannot begin until all required work (excluding concrete above the bridge deck and grouting of prestressing ducts) has been completed in that span and in the adjacent spans over a length equal to at least 1/2 of the length of the span where falsework is to be removed. See Figure 9-l.

---

[17] As a point of interest, field research conducted in the early 1970's revealed that -- depending on falsework configuration, type of structure and construction sequence -- the maximum load imposed on the falsework varied from as little as 110 percent to as much as 200 percent of the load measured about 24 hours after deck concrete placement. The 150 percent figure in the specifications is a compromise that recognizes that some increase will occur in virtually all instances.

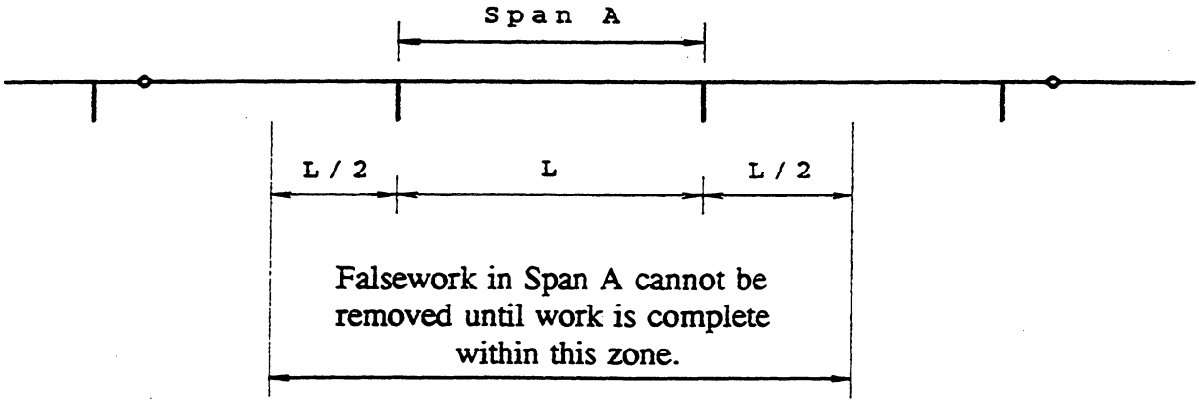


**FIGURE 9-1**

Falsework removal often presents a greater challenge than the original construction; hence it must be carefully performed to ensure both worker and public safety. To ensure that falsework removal receives the attention it warrants, the specifications require the contractor to include a removal plan on the falsework drawings. The plan must show the methods and procedures to be employed, and any temporary bracing required.

When evaluating falsework removal schemes, keep in mind that the stability of the falsework system depends on the interaction of many component parts. As falsework components are removed, unbalanced and/or eccentric loadings may occur, and the use of jacks to unload portions of the falsework may induce forces that exceed those considered in the original design. No stabilizing component should be removed without considering the effect of its removal on the stability of the falsework still in place.

Since the falsework removal plan must be shown on the falsework drawings, it must of necessity be developed many months (even years on very large projects) before the actual removal work will be done, and thus its appropriateness may be affected by conditions and circumstances that were not anticipated. In view of this reality, prior to the start of any falsework removal, the structure representative along with staff members who may be directly involved with the removal operation are to meet with the contractor to review the removal plan. The review should consider the general appropriateness of the removal method in the light of the actual site conditions, and should include a discussion of the removal sequence and equipment to be used, the number and responsibilities of the workers involved, and public and worker safety.

## INSPECTION

The contractor must designate an employee who will be in charge. of the removal work, and who will be present at the work site while the work is in progress. Additionally, the structure representative will assign a staff member to be present whenever falsework is being removed. However, field personnel should keep in mind that falsework removal, like all other contract work, is the contractor's operation and it is the contractor's responsibility to perform the work in a safe manner and in accordance with the approved removal plan.

Some contractors use cables attached to winches set on the bridge deck to lower elements of the falsework system. While this is a simple and generally satisfactory removal method, the weight of the winch plus the weight of the suspended falsework may produce a relatively large concentrated load. Before such removal plans are approved, the structure representative should be certain that the winch load is distributed over the deck in a manner that prevents overstressing of the permanent structure, In some cases it may be appropriate to discuss the distribution method with the designer.

Division of Structures policy provides for an exception to the specification provisions governing release of falsework in the case of bracing system components. With certain exceptions as discussed in the following paragraph, bracing components may be removed on the day following deck concrete placement if, in the structure representative's judgment, theconcrete superstructure is capable of transferring horizontal forces from the falsework to the bridge substructure.

Bracing must remain in place until all other falsework may be removed in the following cases:

- For all falsework, all elements of cable bracing systems installed to prevent internal collapse of a falsework bent must remain in place.

- Bracing or other methods used to support the compression flange of a beam or reduce the L/d ratio of any falsework member must remain in place until the other elements of the falsework system are removed.

- For falsework erected over or adjacent to roadways or railroads, all components that contribute to horizonal stability and resistance to impact must remain in place until the elements of the system they are restraining are removed. This includes diagonal bracing as well as the special impact resisting connections.

- For falsework supporting continuous prestressed structures being constructed in stages, bracing must remain in place as discussed in the following section.

## 9-l.16A Stage Construction

When continuous cast-in-place prestressed structures are constructed in stages, the stage construction sequence will require some load-supporting elements of the falsework system to remain in place for an extended period of time. For such structures, falsework removal involves special considerations.

For any given construction stage, the initial stressing will transfer the superstructure dead load from the center of the spans toward the points of support. This redistribution of dead load forces will decrease the load applied to the falsework near the center of the continuous spans. The load being carried by falsework near the center of a suspended span will be decreased as well; however, the load on the falsework supporting the hinge or construction joint will be increased by dead load transfer.

For continuous prestressed structures, the specified sequence of falsework removal will require certain elements of the falsework system to remain in place. Except for any bracing installed to prevent overturning, all components of such falsework, including diagonal bracing, must remain in place, even though the falsework may have been partially unloaded by the prestressing operation. This procedure is necessary because, with the passage of time, the redistributed dead load will be carried back toward the center of the span as superstructure dead load deflection takes place.

For continuous prestressed structures, all elements of the falsework system that are not required by the specifications to remain in place should be completely removed. If the falsework cannot be removed within a reasonable time, any components remaining in place should be unloaded. This procedure is necessary to prevent overloading of partly disassembled falsework still in place under the deflecting superstructure.

# INDEX


ANCHOR BLOCKS
Design Criteria 4-32

APPROVAL OF FALSEWORK DRAWINGS
By Registered Engineer 2-5
General discussion 2-1
Railroad Approval required 2-5
Responsibility for 1-5

ASSUMED HORIZONTAL LOAD
General discussion 3-2
See also Horizontal Design Load

BEAM CONTINUITY
As a design consideration 3-15
Effect on falsework towers 6-9

BEAM DEFLECTION
See Def lection

BEAM HANGERS
Limitations on use 4-34

BEAM SPAN
In timber members 4-2

BEAMS
See Steel Beams
See Timber Beams

BENDING STRESS
In steel beams 4-20
In timber beams 4-3

BI-AXIAL BENDING
As a design consideration 4-21

BOLTED CONNECTIONS
At traffic openings 8 4
Design criteria 4-9

BRACING
See Cable Bracing
See Diagonal Bracing
See External Bracing
See Falsework Bracing System
See Temporary Bracing at F/W Openings

CABLE BRACING
Anchor blocks, Design of 4-32
Cable connectors 4-29
Catalog data required 4-26
Design load 4-28
Inspection of 9-7
Safety factor 4-29
When used as bracing to prevent internal collapse 4-26
When used as temporary' bracing 4-25,9-13

CALCULATIONS, CONTRACTOR'S
Purpose of 2-4

CAMBER
Defined 3-13
General Discussion 3-13, 3-14
Stress on camber strips 3-14

CATALOG, DATA
For cables 4-26
For shoring systems 6-1
For manufactured assemblies 4-32
Furnished when requested 2-2

CHRONOLOGICAL LOG
Preparation of 2-6

COEFFICIENT OF FRICTION
For anchor block design 4-32
For falsework design 3-17

CLEARANCE ZONE
At traffic openings 8-1

COLLAPSE
As a failure mode 5-1

COLLAPSING FORCE
Defined 5-5

COLUMNS
See Steel Posts and Columns
See Timber Posts
Pile Column 7-35,7-36

COMBINED STRESSES
As a design consideration 5-2,5-14
in pile bents 7-34,38,39,47,48,49,52

CONCRETE ANCHOR BLOCKS
Design criteria 4-32

CONSTRUCTION JOINTS
Falsework bent required 3-16

CONSTRUCTION SEQUENCE
As a design consideration 3-16

CONTINUITY
See Beam Continuity

CONTINUOUS PADS AND STILLS
Criteria for analysis 7-3
Effective length formula 7-4,7-5,7-8

CONTRACTUAL RELATIONSHIPS
General discussion I-5

# INDEX


CORBELS
- Multiple corbel systems 7-11
- Load distribution 7-20
- Timber corbels 7-21

DEAD LOAD
- General discussion 3-I

DECK OVERHANG BRACKETS
- Limitations on use 4-34

DECK SHRINKAGE
- Effect on falsework 3-18

DEFLECTION
- Actual deflection 3-12
- Dead load deflection 3-1
- Effect on vertical clearance 8-I
- Of cantilevered beam ends 3-13
- Of deck overhang 3-12
- Of sloping exterior girders 3-13
- Responsibility for calc. 3-12
- Theoretical deflection 3-1,3-11
- Upward (negative) deflection 3-12

DEFLECTION, HORIZONTAL
- As a design consideration 3-15
- Effect on falsework piles (Lateral) 7-33

DESIGN CALCULATIONS
- Purpose and use of 2-4

DESIGN LOAD
- Dead load 3-I
- Horizontal load 3-2
- Live load 3-1
- Minimum vertical load 3-2
- On cable bracing 4-28
- On construction walkways 3-2
- On diagonal bracing 5-3,5-4,5.5
- On posts adjacent to traffic 8-4
- See also Horizontal Design Load
- See also Wind Load

DIAGONAL BRACING
- General discussion of 5-3
- Removal of 9-13
- Use of cables use 4-25,9-7

DIFFERENTIAL LEG LOADING
- Limiting ratios
  - For heavy-duty shoring 6-9
  - For pipe-frame shoring 6-4

DIFFERENTIAL LEG SHORTENING
- As a design consideration 6-10

DOUBLE CAPS
- At traffic openings 8-3
- Stability of 5-73

DOUBLE LEGS
- Criteria governing use of 6-10

DURATION OF LOAD
- Adjustment factors 4-19
- At traffic openings 8-3
- Effect on allowable stresses 4-2

EXTERIOR GIRDER ROTATION
- Prevention of 3-13

EXTERNAL BRACING
- Defined 5-2
- On heavy-duty shoring 6-11

FALSEWORK
- Definition of I-3
- Types of I-3

FALSEWORK BRACING SYSTEM
- Definition of 5-I
- Removal of 9-13

FALSEWORK CHRONOLOGICAL LOG
- Preparation of 2-6

FALSEWORK DRAWINGS
- Approval of 2-5
- Initial review checklist 2-3
- Railroad approval required 2-5
- Review sequence 2-2
- Time for review 2-I
- When complete, guidelines for 2-2

FALSEWORK FAILURE MODES
- Discussion of 5-1

FALSEWORK LIGHTING
- General discussion 9-9

FALSEWORK PADS
- Effective length of 7-4,7-5,7-8
- Inspection of foundation for 9-2
- Procedure for analysis
  - Continuous pads 7-3
  - individual pads 7-7

FALSEWORK PILES
- General discussion 7-23
- See also Steel Piles
- See also Timber Piles

FALSEWORK POSTS
- See Steel Posts and Columns
- See Timber Posts

# INDEX


FALSEWORK REMOVAL
General discussion 9-12

FALSEWORK TOWERS
See Heavy-Duty Shoring

FIELD CHANGES
General discussion 9-9

FLANGE BUCKLING
In steel beams 4-22

FLANGE SUPPORT SYSTEMS
Design criteria 4-24
General discussion 4-22
Removal of 9-13

FORM DESIGN DATA
Request for 2-I

FOUNDATION DESIGN
For heavy-duty shoring 6-10
For pipe-frame shoring 6-6
See also Falsework Pads
See also Falsework Piles

FOUNDATION MATERIAL
Inspection of 9-2
Tests on 9-3

FRICTION
As a design consideration 3-17

HEAVY-DUTY STEEL SHORING
Alternative design criteria 6-8
At traffic openings 8 4
Criteria governing use of 6-8
Differential leg loads 6-9
Differential leg shortening 6-10
Double legs 6-10
External bracing required 6-11
Foundation requirements 6-11
Inspection of 9-7
Load reduction required 6-1
Modified shoring 6-8
Safe working loads discussed 6-I
Safety factor 6-8
Sidesway, effect of 6-10
Test load conditions 6-1
Unequal leg settlement 6-10
Wind loads, calc. of 3-4

HIGH-STRENGTH STEEL
Advantages of 4-20

HORIZONTAL DEFLECTION
As a design consideration 3-15
See also Timber Pile Bents

HORIZONTAL DESIGN LOAD
As a collapsing force 5-5
As an assumed load 3-2
Defined 3-2
Purpose Of 3-3
Where applied
As a collapsing force 5-5
As an overturning force 5-11
See also Wind Load

HORIZONTAL SHEAR
In steel beams 4-2 1
In timber beams 4-3

HORIZONTAL STABILITY
See Stability

IMPACT
Duration of load factor 4-19,8-3

INITIAL REVIEW OF F/W DRAWINGS
Information pertaining to 2-2

INSPECTION
After concrete placement 9-12
During concrete placement 9-11
Engineer's responsibility 9-I
Of cable bracing 9-8
Of falsework lighting 9-9
Of foundation material 9-2
Of manufactured products 9-10
Of pads and sills 9-2
Of piles 9-1,94
Of steel shoring 9-7
Of structural steel 9-6
Of timber construction 9-4
Timely insp. required 9-1

INTERMEDIATE STRENGTH SHORING
Conditions of use 6-6
Mfgrs. statement required 6-7

INTERNAL STABILITY
Of timber falsework bents 5-3

LAG SCREWS
Criteria for design 4-14

LATERAL SUPPORT OF WOOD BEAMS
Design guidelines 4-6

LIVE LOADS
General discussion 3-I

LOAD TESTS
On cable 4-27,4-29
On manufactured products 4-33
On noncommercial devices 4-33
On soil foundations 9-3

# INDEX


LOCKED-IN STRESSES
- Rotation of exterior girders 3-13
- In T-beam structures 3-16

LONGITUDINAL STABILITY
- Provided by friction 5-9
- Provided by positive means of resistance 5-10

MANUFACTURED ASSEMBLIES
- Catalog data required 2-2.4-32
- Definition of 4-32
- inspection of 9-10
- Load test procedure 4-33

MINIMUM VERTICAL LOAD
- As a design requirement 3-2

NAILS AND SPIKES
- Criteria for joint design 4-17

OVERTURNING
- As a design consideration 5-10
- As a failure mode 5-1

OVERTURNING MOMENT
- Calculation of 5-11
- Effect on post loads 5-12
- Produced by wind loads 3-5,3-9

PADS AND SILLS
- See falsework Pads

PILES
- General Discussion 7-23
- See also Steel Pile Bents
- See also Timber Pile Bents

PIPE-FRAME SHORING
- Allowable loads 6-3
- Analysis of 6-4
- As a manufactured product 6-1
- Description of 6-2
- Inspection of 9-7
- Load reduction required 6-1,6-3,64
- Overturning stability 6-5
- Safe working loads 6-1
- Stability of 6-5
- Supplemental bracing required 6-5
- Test load conditions 6-1
- Unequal leg load iimitation 6-4

POINT OF FIXITY
- Of falsework piles 7-25,30,37,45.48,53

PONY BENTS
- Stability of 5-13

POSITIVE MEANS OF RESTRAINT
- Definition of 5-10

PRESTRESSING FORCES
- Effect on falsework 3-18,8-4

RAILROAD REQUIREMENTS
- Approval by railroad company 2-5
- Special design considerations 8-6

REMOVAL OF FALSEWORK
- General discussion 9-12

RESISTING CAPACITY
- Of diagonal bracing 5-4

RESISTING MOMENT
- Calculation of 5-11

RESPONSIBILITY
- For approval of F/W drawings 1-4,2-l
- For camber calculations 3-12
- For deflection calculations 3-12
- For evaluating materials 9-l
- For falsework construction 1-5
- For falsework design 1-5
- For inspection of falsework 5-l

REVIEW OF FALSEWORK DRAWINGS
- Chronological record of 2-6
- General discussion 2-1
- Incomplete drawings 2-4
- Initial review checklist 2-3
- Procedural requirements 2-1
- Responsibility for 1-5
- Time for review 2-1

SAFETY FACTOR
- For cable bracing 4-29
- For heavy-duty shoring 6-8
- For manufactured products 4-33

SAND JACKS
- Construction and use of 9-3

SHEAR
- Horizontal, in timber beams 4-3
- in steel beams 4-21

SHIELDING
- Effect on wind impact area 3-10

SOIL LOAD TESTS
- Discussion of 9-4

# INDEX


STABILITY
- Defined 5-1
- Internal stability 5-3
- Longitudinal stability 5-9
- Of falsework systems 5-1
- Of heavy-duty shoring 6-11
- Of multiple-tower bents 6-11
- Of pipe-frame shoring 6-5
- Of steel beams 4-23
- Of wood beams 4-6

STANDARD SPECIFICATIONS
- Reference to 1-3

STEEL BEAMS
- Allowable stresses 4-20
- Bending 4-20
- Continuous over F/W towers 6-9
- Flange buckling 4-22
- Flange support 4-23
- Inspection of 5-6
- Shear 4-21
- Web crippling 4-22

STEEL BRACING
- Design criteria 5-8

STEEL GIRDER BRIDGES
- Deck F/W considerations 3-20

STEEL JOIST ASSEMBLIES
- Limitations on use of 4-35

STEEL PILE BENTS
- Criteria for analysis 3-52

STEEL POSTS AND COLUMNS
- Design criteria 4-25

STEEL SHORING
- See Heavy-Duty Steel Shoring
- See Pipe-Frame Shoring

STRESS ANALYSIS
- General design assumptions 4-1
- Policy statement 4-1

SUPPLEMENTAL BRACING
- For heavy-duty shoring 6-11
- For pipe-frame shoring 6-5

TEMPORARY BRACING AT F/W OPENINGS
- Design criteria 8-4,8-6
- Purpose of 5-8
- Removal of 9-13
- When installed 5-8
- Wind direction on 3-4,8-6

TIMBER
- Construction checklist 9-5
- Member size considerat ions 4-2

TIMBER BEAMS
- Allowable stresses 4-1
- Beam span defined 4-2
- Bearing length required 4-5
- Bending, discussion 4-3
- Compression ⊥ grain 4-4
- Horizontal shear in 4-3
- Lateral support of 4-6

TIMBER POSTS
- Assumed end condition 4-6
- Design formulas for 4-7
- Post design at F/W openings
  - Lateral restraint criteria 8-3
  - Modified vertical load 8-4

TIMBER FASTENERS
- Bolts 4-9
- Drift bolts 4-15
- Lag screws 4-14
- Nails and spikes 4-17
- Specification reference 4-9

TIMBER PILE BENTS
- Adequacy of braced bents 7-34
- Analysis of 7-29
- Analysis of braced bents 7-32,34,41
- Analysis of unbraced bents 7-32,43
- Driving tolerances 7-26,44
- Effect of pile pull 7-30
- Fixity. See Point of Fixity
- General discussion 7-23
- Longitudinal Stability 7-41
- Required pile penetration 7-24,44
- Soil relaxation factor 7-26
- Vectoring of Stresses 7-50

TINKER TOY FALSEWORK
- See Pipe-Frame Shoring

TRAFFIC OPENINGS
- Bolted joints required 8-4
- Clearance requirements 8-1
- Double caps 8-3
- Falsework lighting 9-9
- Post design load 8-4
- Post restraint 8-2
- Railroad requirements 8-6
- Temporary bracing 8-4,8-6,9-8

TRIPLE LEGS
- Limitations on use of 6-10

# INDEX


VERTICAL STEEL SHORING
See Heavy-Duty Steel Shoring
See Pipe-frame Shoring

WEB CRIPPLING
In Steel beamS 4-22

WIND IMPACT AREA
Definition of 3-4
Effect of shielding 3-10

WIND LOAD
Assumed wind direction
On falsework 3-8
On heavy-duty shoring 3-4
General discussion 3-3
Effect of shielding 3-10
Factors affecting 3-3
On conventional falsework 3-9
On heavy duty shoring 3-5
On temporary bracing 8-6
Wind impact area defined 3-4

# APPENDIX A. WOOD CHARACTERISTICS

## Structure of Wood

### Wood Cells

The cells which make up the structural elements of wood are generally tubular and quite firmly grown together. Dry wood cells may be empty, or partly filled with deposits such as gums and resins.

Many wood cells are considerably elongated and pointed at the ends. Such cells are called fibers. The direction of the wood fibers with respect to the axis of the tree is one of the most important characteristics affecting the usefulness of a given piece of wood, since it has a marked influence on strength.

The length of wood fibers may vary considerably in a given tree, as well as between different species. Typically, hardwood fibers average about l/25 inch in length; softwood fibers average from l/8 to l/4 inch in length, or longer.

### Growth Rings

Between the bark of a tree and the wood interior is a layer of thin-walled, nearly invisible living cells, called the cambium layer, in which all growth of the tree takes place. New wood cells are formed on the inside and new bark on the outside of the cambium. No growth in either thickness or length takes place in wood already formed, new growth is purely the addition of new cells -- not the further development of old ones.

In temperate climates there is usually enough difference in color and texture between the wood formed early and that formed late in the growing season to produce well-marked annual growth rings. The age of a tree at any cross-section may be determined by counting the growth rings. One ring represents one year of growth, provided the growth has been interrupted by cold or dry seasons so that the change in cell structure is sufficient to define the annual layer.

## Springwood and Summerwood

In many species of wood each annual growth ring is divided into two distinct layers. The inner part of the ring, formed first in the growing season, is called springwood. The outer part, formed later in the growing season, is called summer-wood, The transition from springwood may be gradual or abrupt, depending on the kind of wood and the growing conditions when it was formed,

Springwood in generally characterized by cells with relatively large cavities and thin walls, whereas summerwood cells have smaller cavities and thicker walls. Summerwood generally will be heavier, harder and stronger than springwood.

The percentage of summerwood in a given piece of lumber determines the density of the piece. Other factors being equal, the higher the density, the greater the strength. Because of its greater density, the proportion of summerwood in a particular piece of lumber is sometimes used as an indication of its quality and strength.

## Sapwood and Heartwood

The wood portion of a tree has two main parts. The outer part, which consists of a ring of wood around the tree just under the bark, is called sapwood. Within the sapwood ring is an inner core, generally darker in color, called heartwood.

The sapwood ring varies in thickness from one to three inches depending on the age and specie of the tree. Sapwood contains the living cells and takes part in the active life processes of the tree. Heartwood consists of inactive (not dead) cells and serves mainly to give strength to the tree. Except for the slightly darker color of heartwood, there is littIe difference in the strength or physical characteristics of heartwood and sapwood from a given tree.

As a tree grows older and larger, the inner layers of sapwood change to heartwood. Eventually the heartwood core forms the major part of the trunk and main branches.

## Chemical Composition of Wood

Wood is a complex aggregate of compounds which may be divided into two major groups: (1) those which make up the cell structure, and (2) all other substances, which are commonly called "extractives" or infiltrated materials.

## WOOD CHARACTERISTICS

The cell wall components consist primarily of cellulose and lignin, Cellulose is the most abundant constituent, comprising about 70 to 80 percent of the wood structure. Lignin, which comprises from 20 to 30 percent of the wood structure, is the cementing agent which binds the individual wood fibers together to form a substance of strength and rigidity.

In addition to cellulose and lignin, wood contains a small amount of mineral matter. These minerals, known as "ash forming" minerals because they are left as ash when the lignin and cellulose are burned, constitute less than one percent of the total wood substance.

The extractives are not part of the wood structure as such, but they contribute such properties as color, odor, taste and resistance to decay. They include tannins, starches, oils, resins, acids, fats and waxes. They are found within the hollow portions of the wood cells, and can be. removed from the wood by neutral solvents such as water, alcohol, benzol, acetone and ether.

### Hardwoods and Softwoods

All wood species are classified for commercial purposes as either hardwoods or softwoods.

The hardwoods are the broad-leafed, deciduous trees which drop their leaves at the end of the growing season. Examples of commercially-grown hardwoodtrees include oak, maple, walnut and ash.

The softwoods are evergreen trees. Evergreen trees may have fern-like leaves, typical of the redwoods, or needle-shaped leaves typical of the pines and firs. Softwoods are also known as conifers (or "cone bearers") because all softwood trees bear cones of one kind or another.

The terms "hardwood" and "softwood" are somewhat misleading in that they have no direct application to the actual or relative hardness or softness of a particular kind of wood. Many hardwoods are softer than the average softwood. Douglas Fir, which is widely used in the west as a construction material, is a softwood by definition; nevertheless, the better grades of Douglas Fir are dense, hard and tough.

### Specific Gravity

Although dry wood of most species will float in water, the absolute specific gravity of the basic substance of which wood is composed is about 1.55 for all species. Thus it is evident

that a large part of the volume of wood is occupied by cell cavities and pores, so that the resultant relative specific gravity of wood is less than 1.00 for most species.

Variation in the size of the cell openings and the thickness of the cell walls causes some species to have more wood substance than others and therefore to have higher relative specific gravities. Consequently, the density of cut lumber will vary between species, averaging from 30 to 40 pounds per cubic foot at normal moisture content for most commerically grown softwoods.

Since density depends on the amount of wood substance in a given piece of lumber, it is an excellent index of strength. The higher the density, the greater the strength of cut lumber, all other factors being equal.

Grain

The term "grain" as it is applied to wood is most often used to indicate the direction of the wood fibers relative to the axis of the tree or the longitudinal edges of a piece of cut lumber. Thus, if the fibers are generally parallel to the axis of a tree, the lumber from the tree will be straight-grained; however, if the direction of the fibers makes an angle with the axis, the lumber will be cross-grained.*

Grain is also used in reference to the width and spacing of the annual growth rings. Thus, lumber may be close-grained, medium-grained or coarse-grained. Note, however, that these are relative terms without precise meaning.

Edge grain refers to lumber in which the growth rings are at approximately right angles to the surface of the piece. Flat grain refers to lumber in which the surface of the piece of lumber is approximately tangent or parallel to the direction of the growth rings.

---

* Note that the term "cross-grain" is also used to indicate a direction which is actually perpendicular to the grain. This usage is generally associated with the direction, with respect to the grain, at which a load is applied.

# WOOD CHARACTERISTICS

## Moisture Content

Living trees may contain as much as 200 percent moisture by weight. After a tree is cut and converted into lumber, the wood begins to lose moisture. The process of removing moisture from green lumber is known as seasoning, which may be accomplished by exposure to the air or by kiln drying,

Green wood contains moisture in two forms: as "free water" in the cell cavities and as "absorbed water" in the capillaries of the cell walls. When green wood begins to lose water, the cell walls remain saturated until the free water has evaporated. The point at which evaporation of free water is complete and the cell walls begin to lose their moisture is called the "fiber saturation point." The fiber saturation point occurs at a moisture content of about 25 to 30 percent for most species.

Variations in moisture content above the fiber saturation point have no effect on the volume or strength of wood. As wood dries below the fiber saturation point and begins to lose moisture from the cell walls, shrinkage begins and strength increases.

Wood in use over a period of time will give off or take on moisture from the surrounding atmosphere until the moisture in the wood corresponds to the humidity of the surrounding atmosphere, When exposed to similar atmospheric conditions, different woods will have the same moisture content regardless of their density.

Moisture content has an important effect on susceptibility to decay. Most decay-producing fungi require a moisture content above the fiber saturation point to survive. In addition, favorable temperatures, an adequate supply of air and a source of food are essential. Wood that is continuously water-soaked (as when submerged) or is continuously dry (i.e., with a moisture content of 20 percent or less) will not decay.

## Shrinkage

Shrinkage of wood takes place between the fiber saturation point and the oven-dry condition. It is stated as a percentage of the original or green dimension.

Wood shrinkage is greatest in the direction of the annual growth rings, somewhat less across the rings, and very little along the grain. Typically, shrinkage along the grain (longitudinal shrinkage) is usually less than one percent and therefore too small to be of practical significance.

Shrinkage of commercial softwood boards across the grain averages about one percent for each four-percent change in moisture content. Shrinkage of hardwoods is slightly larger.

Large structural timbers shrink proportionally less than smaller pieces of lumber because drying does not take place simultaneously in the inner and outer portions. The inner portion dries more slowly than the outer portion and prevents the wood near the surface from shrinking normally. Later, when drying of the interior occurs, the outer portion which has now set prevents the inner portion from shrinking to the extent that it otherwise would.

## Strength of Wood

### Introduction

The term "strength" as it is used in structural design terminology refers to-the ability of a given material to resist elastic deformation when subjected to external forces. Unlike most other building materials, however, wood exhibits different strength properties depending on whether the forces are applied parallel or perpendicular to the direction of the wood fibers or "grain" of the wood. In general, wood is strongest along the grain and weakest at right angles to it.

Because the strength of a given piece of wood depends on the direction of the wood fibers with respect to the direction of the applied load, it is necessary to consider the effect on wood strength of each of the stresses produced by a particular loading condition. These stresses, and the ability of wood to withstand them, are discussed in the following sections.

### Tensile Strength

The tensile strength of wood parallel to the grain depends on the strength of the fibers and is affected not only by the nature and dimensions of the wood elements but also by their arrangement. It is greatest in straight-grained specimens with thick-walled fibers. Cross-grain of any kind will materially reduce the tensile strength of wood, since tensile strength perpendicular to the grain is only a small fraction of the strength parallel to the grain. The ratio of tensile strength parallel to the grain to tensile strength perpendicular to the grain is commonly as high as 40 to 1.

## WOOD CHARACTERISTICS

When loaded in direct tension, strain and stress are proportional virtually to ultimate load, and there is no well-defined proportional limit below this point. Wood, therefore, will yield only a very slight amount prior to ultimate failure in direct tension.

As a matter of interest, if only the net cross-sectional area of a piece of wood is considered (i.e., if the cell cavity area is deducted) the ultimate tensile strength of a clear specimen is about 70,000 psi, which is comparable to the strength of mild steel.

### Compressive Strength

There are two ways in which wood may be subjected to compressive stress: compression perpendicular to the grain sometimes referred to as cross-grain compression, and compression parallel to the grain.

Compression perpendicular to the grain is often critical in timber design. It is usually most severe at the ends of deep, narrow beams, and in the connecting members at the top and bottom of short, heavily-loaded columns.

The primary effect of compression perpendicular to the grain is compaction of the wood fibers. As the fibers compact, the load-carrying capacity of the wood increases as the density of the material increases.

If the load is applied to only a portion of the upper surface, the bearing plate or post indents the wood, crushing the upper fibers without affecting the lower part of the member. Under this loading condition, the projecting ends of the member increases the strength of the material directly beneath the compressing weight by introducing a beam-action which helps support the load; however, this beam-action is exerted for a short distance only.

Compression parallel to the grain will occur in many uses of wood (such as columns, props and posts) in which the member is subjected to loads which tend to shorten it lengthwise.

The compressive strength of wood parallel to the grain is from three to five times greater than the compressive strength perpendicular to the grain. The ratio is about the same for both green and seasoned material.

Maximum compressive strength parallel to the grain is a measure of the ability of a short column to withstand load, In long columns, however, bending is introduced before the full crushing or compressive strength is reached, and failure is by lateral bending of flexure, rather than by crushing.

In determining the strength of wood columns, the ratio of the unsupported length of the member to the least cross-sectional dimension is of primary importance. Short columns having an unsupported length of less than 11 times the least dimension have practically the full compressive strength of the material, whereas the strength of extremely long columns is governed entirely by the stiffness of the wood and resistance to endwise compression is not involved. For columns between these two extremes both the compressive strength and the stiffness of the wood are taken into consideration.

Shearing Strength

Shearing strength is a measure of the ability of wood to resist forces that tend to cause one part of a member to slip or slide along another part adjacent to it.

Shearing stresses will occur under almost all loading conditions, and the forces which produce them are classified according to the direction in which they act as shear parallel to (or along) the grain and shear perpendicular to (or across) the grain.

Under certain conditions, shearing stresses may act both perpendicular to the grain and parallel to the grain at the same time. For example, in a loaded beam the applied forces tend to shear the wood across the grain. This stress is equal to the resultant force acting perpendicular to the axis of the beam at any point. In a member uniformly loaded and supported at both ends, the stress is maximum at the points of support and zero at the center. In addition, there is a shearing force tending to move the fibers of the beam past each other in a longitudinal direction, or along the grain. In a beam this force is known as "horizontal" shear.

The presence of horizontal shear in the direction of the grain may be readily demonstrated by placing several boards one on top of the other and loading them at the center. As the boards bend, they slip over one another so that the ends of each project beyond those of the one below. In a solid beam this movement is restrained, and the longitudinal shear stresses developed are maximum at the neutral plane and decreased toward the upper and lower edges.

## WOOD CHARACTERISTICS

The resistance of wood to shear perpendicular to the grain is much greater than its ability to withstand shear along the grain. So much so in fact, that shear perpendicular to the grain may be ignored in beams, stringers and similar members. However, horizontal shear is frequently critical in beams and caps, particularly in the case of short, deep members, and should be considered when designing or checking any member which is subjected to bending stresses.

### Flexural Strength

When external forces acting in the same plane are applied at right angles to the axis of a simple beam causing it to deflect or bend, three fundamental stresses -- compression, tension and shear -- will occur within the member, all acting in a direction parallel to the grain.

If the beam is loaded too heavily, it will break or fail in some manner. Beam failures are classified according to the way in which they develop; i.e., compression failure, tension failure or horizontal shear failure. A combination of failures may develop if the beam is completely ruptured.

Since the tensile strength of wood parallel to the grain is normally from two to five times greater than the compressive strength in the same direction, beam failure w-ill occur first by crushing on the compression side, followed by tearing or rupture of the wood on the tension side. Horizontal shear failure is fairly common when the ratio of the height of the beam to the span is relatively large, since it is the short, deep beam which is subjected to the loading condition which produces maximum shearing stress.

### Stiffness

The stiffness of wood, when used in reference to either a beam or long column, is a measure of its ability to resist deformation or bending. It is expressed in terms of the "modulus of elasticity" and applies only within the proportional limit.

Because of its fibrous structure, wood is characterized by three moduli of elasticity, one for each structural direction. Values for modulus of elasticity in the two directions perpendicular-to the grain are relatively low, being approximately l/12 to l/20 of the value parallel to the grain. As far as solid wood beams are concerned, however, the value for modulus of elasticity parallel to the grain is the only one of importance.

The modulus of elasticity is used in calculating the deflection of beams and joists, and in computing safe loads for long and intermediate columns.

Although stiffness is independent of bending strength, woods which rank high in one respect usually rank high in the other as well.

Effect of Moisture Content

Wood increases in strength as it dries. The strength increase begins at the fiber saturation point (the point at which the cell walls begin to loose moisture) and increases rapidly as drying continues.

Drying wood from the fiber saturation point to five-percent moisture will usually double and in some cases triple end-crushing strength and bending strength. However, this increase in strength with seasoning is greater in small, clear specimens of wood than in large timbers. In the latter, increase in strength-bay be offset to some extend by checking, if checking develops during the seasoning process.

Not all strength properties increase with a decrease in moisture content; in fact, properties indicative of toughness. or shock resistance may actually decrease as wood dries. This is because dried wood will not bend as far as green wood before failure (although it will sustain a greater load) and because toughness depends on both strength and flexibility.

Duration of Load

Wood has a unique property not found in other building materials. This is its ability to withstand a proportionally greater stress as the length of time the load is applied is decreased.

Both the elastic limit and the ultimate strength of wood are higher under short-time loading than under long-time loading. Wood is thus able to absorb overloads of considerable magnitude for short periods of time, or smaller overloads for longer periods of time, Obviously, the duration of a load is an important factor in determining the total load that a member can safely carry.

# WOOD CHARACTERISTICS

## Wood Defects

### Definition

As defined by ASTM, a defect is any irregularity occurring in or on wood that reduces its strength as compared to the strength of a clear-grained specimen.

### Knots

A knot is that portion of a branch or limb which has been incorporated into the body of the tree. Knots are the most prevalent defect in structural timber.

In structural beams, the effect of a knot on bending strength depends on the size and location of the knot. In a simply-supported beam, for example, knots on the lower side are placed in tension, those on the upper side in-compression and those at or near the neutral axis in horizontal shear. On the tension side at the point of maximum stress, a knot has a marked effect on the total load a beam will carry, while knots on the compression side are somewhat less serious. In any location, knots have little effect on shearing strength.

Knots have little or no effect on stiffness; hence in long columns where stiffness is the controlling factor knots are not viewed as a strength-reducing defect. In short and intermediate columns, thereduction in strength due to knots is approximately proportional to the size of the knot. Large knots, however, have a somewhat greater relative effect than small knots.

The reduction in strength due to the presence of knots in a given piece of lumber is caused primarily by local distortion of the wood grain in and around the knot. Knots interrupt the normal direction of the grain and cause localized cross grain with very steep slopes. As knot size increases, the distortion of the grain around the knot is more than proportionally increased; consequently, the size of a knot compared to the size of the piece is an important consideration.

Since the strength-reducing effect of a knot depends more on the distortion of the surrounding grain than on the knot itself, knotholes have the same effect on strength as knots. Since holes due to other causes are not accompanied by a distortion of the grain, the limitations that apply to knotholes are sufficient to determine the effect of other holes as well.

## Checks and Shakes

A "Check" is a separation of the wood fibers along the grain but across the rings of annual growth. A "shake" is a separation of the wood fibers along the grain between and parallel to the rings of annual growth.

Checks commonly occur as a result of unequal shrinkage during seasoning. Shakes are the result of the rupture of wood cells in a weakened portion of the wood; they seldom develop unless they were present to some degree before the tree was felled.

Checks and shakes will reduce the shearing strength of members subject to bending, particularly if they are located near the neutral axis. They have little effect on the strength of members subject to compression parallel to or perpendicular to the grain.

## Splits

Splits are lengthwise separations of the fibers extending from one surface completely through a piece to another surface. Splits are the result of internal stresses or rough handling. Splits affect strength in the same way as checks and shakes.

## Cross Grain

Cross-grained wood is defined as wood in which the cells or fibers run at an angle with the axis, or sides, of the piece.

To determine the effect of cross grain on the strength of wood, it is necessary to have some measure of its degree. This is afforded by the "slope" of the cross grain, which is defined as the deviation of the grain from the edge of the piece or from a line parallel to its principal axis. Slope is usually designated by the ratio of a one-inch deviation of the grain from the edge to the distance along the edge over which the deviation occurs. Thus a slope of one-in-twenty means that over a distance of 20 inches along the edge, the grain deviates one inch from the edge.

Since the ratio of tensile strength parallel to the grain to tensile strength at right angles to the grain ranges from about 25 to 1 in unseasoned wood to as high as 45 to 1 in air-dry material, it is apparent that even the slightest deviation from straight grain will tend to reduce the tensile strength bf a given piece of lumber. However, this decrease does not become appreciable until a slope of about one-in-twenty is reached; hence lumber in which the slope of the grain is less than one-in-twenty is considered as straight-grained material for all practical purposes.

In compression, the effect of cross grain is less marked, since, strength parallel to the grain in both unseasoned and dry material is only about three to five times the strength perpendicular to the grain. Therefore the slope must approach one-in-ten before a decided decrease in compressive strength is evident.

In shear, the weakening effect of cross grain is small and usually is neglected.

Diagonal Grain

Diagonal grain is produced in lumber entirely by the method of sawing and has no reference to the natural alignment of the wood elements. In cutting lumber, if the plane of the saw blade is not approximately parallel to the bark surface, the grain of the wood will not be parallel to the edges and thus is termed "diagonal."

Diagonal grain has the same strength-reducing effect on a piece of lumber as cross grain.

Warping

Warping is defined as any deviation of a piece of lumber from a true or sawed surface. Warping most often occurs as a result of differences in the longitudinal shrinkage of the two faces of a board. It also may be caused by internal stresses present in the log at the time of sawing.

Warping has no effect on the inherent strength of wood; however, pronounced warping will materially reduce the bearing area of joists and beams and thus make it difficult to develop a satisfactory connection.

Wane

Cut lumber is sometimes characterized by the presence of bark, or by a lack of wood, on the otherwise square edges or corners of a piece. This condition, which is termed wane, is commonly considered a defect although it has no direct effect on strength except as it reduces the cross-sectional area of the piece.

As with warping, wane present at the end of a piece will reduce the bearing area and thus indirectly increase the bearing stress.

Decay

Wood is subject to attack by many low forms of plant life known as fungi. These "wood inhabiting" fungi differ from ordinary green plants in form, lack of green coloring matter, and methods of nutrition. Unlike green plants, they are unable to manufacture their own food, but must have organic material already prepared for their use. This they find in the wood substance composing the cell walls. The action of the fungi results in disintegration of the actual wood substance and gives rise to the condition known as decay.

The development of decay is dependent on the presence of an appreciable amount of moisture in the wood. Although the minimum requirements vary with different fungi, it is generally considered that wood must contain at least 20 percent moisture before decay will occur. Consequently, thoroughly air-dried or kiln-dried lumber is immune from decay unless it is subjected to wetting over a long enough period of time that its moisture content is raised to approximately the fiber-saturation point.

A small supply of oxygen is necessary for the fungi to grow and develop, so that wood which is completely saturated is immune to decay.

Since decay involves an actual breaking down of the cell walls, it is evident that it vitally affects the strength of wood, particularly in the advanced stage. Decayed lumber should never be used for any structural purpose.

# APPENDIX B

## SOIL BEARING VALUES and SOIL LOAD TESTS

### Introduction

In the case of bridge foundation design, determining the supporting capacity of a given foundation material with sufficient accuracy to ensure an adequate structural design requires a complete foundation investigation by an experienced and capable engineering geologistor soils engineer. Fortunately, however, the sophisticated approach to foundation design which is required for permanent work is generally unnecessary for falsework, because in most falsework designs maximum footing pressure is applied for only a short period of time and relatively greater settlements may be tolerated.

The Standard Specifications include a provision which requires the contractor to demonstrate by suitable load tests that the soil bearing values assumed in the falsework design do not exceed the supporting capacity of the soil. This requirement is included in the specifications to further ensure the adequacy of the falsework foundation, and the engineer should not hesitate to order a soil load test if he has doubt as to the ability of the foundation material to support the falsework loads. Note, however, that soil bearing capacity may in most cases be determined with sufficient accuracy for falsework design purposes by simple, static load tests performed by the contractor's forces. Ordinarily, it will not be necessary to employ the services of a private soils lab or consultant.

The following information has been prepared to assist the engineer in those situations where a load test is necessary to verify assumed soil bearing values.

### General Information

Soil load tests should be made at the location where falsework will be erected. Bearing pads for the test load should be set on the same material as the falsework footing, and soil moisture content should approximate the content expected during falsework use.

Other factors being equal, the larger the bearing area of the test load pad, the more reliable the results. Pad area should be not less than two square feet in any case, and preferably three square feet or more in silty or clayey material.

A load test made on a relatively weak soil, such as clay or silt, will demonstrate the bearing capacity of the surface strata satisfactorily. More care should be taken in the test where small footings axe used as these are more critical than larger footings in this type of soil.

A load test made on a thick layer of granular soil overlying a thin weak soil will demonstrate the capacity of the upper layer. It will tell little of the capacity of the lower layer since the test load is small and the pressure on the lower area may be almost negligible since it is spread over a large area.

The effect of a unit-load on a small area may not correspond to the effect of the same unit-load on a large area.

A short-time load on a plastic soil may not have the same effect as the same unit-load on a large area of longer time duration, This is not true, however, for firm granular soils, as time does not not affect this type of soil.

Load Test Procedure

As provided in the specifications, the contractor is responsible for load test performance. The engineer, however, must determine the suitability of the proposed test for the given site conditions and evaluate the test results.*

To ensure uniformity, a "suitable" load test as this term is used in the specifications will be interpreted as meaning a test in which both settlement and duration of load are considered.

One simple and satisfactory test method is to apply a gradually-increasing load with respect to a fixed time interval, and to record the settlement at the end of each time period, The soil yield point is reached when a small increase in load produces a large increase in settlement. The load at yield point should be divided by a factor of safety of two to determine the allowable bearing value.

---

* The Division's Engineering Geology Branch is available for consultation and advice as to the suitability of load tests in a given field situation, as well as interpretation of test results.

## SOIL LOAD TESTS

As an example, consider the following test in which the test load was increased every 12 hours over a three-day period.

| Time Interval | Total Time | Load (T/SF) | Settlement (Inches) |
|---|---|---|---|
| 12 hrs. | 12 hrs. | 1.0 | 0.2 |
| 12 hrs. | 24 hrs. | 2.0 | 0.6 |
| 12 hrs. | 36 hrs. | 2.5 | 1.2 |
| 12 hrs. | 48 hrs. | 3.0 | 2.0 |
| 12 hrs. | 60 hrs. | 3.25 | 2.8 |
| 4 hrs. | 64 hrs. | 3.50 | 4+ |

Load test results should be plotted as shown in the following load-settlement diagram.

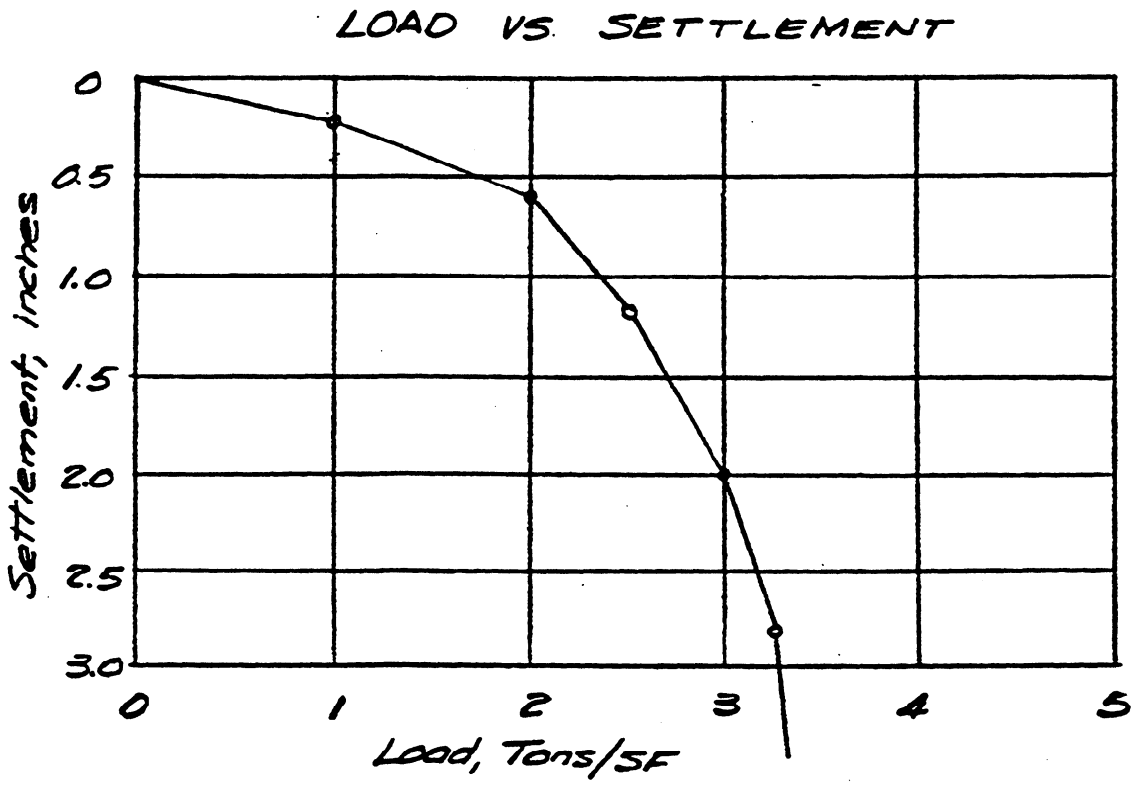


Tram the diagram it is evident that the soil yield point is about 3.0 tons per square foot. This value should be divided by a factor of safety of 2.0 to determine the soil bearing value at the ground surface, which in this case is about 1.5 tons per square foot.

If no clearly-defined yield point exists, as will be the case in granular materials, the load which produces a one-inch settlement may be taken as the ultimate bearing capacity. Again, this value should be divided by a 2.0 safety factor to determine the allowable bearing value.

Another method takes into consideration the ratio of the size of the test pad to the size of the proposed falsework pad, along with the contractor's anticipated settlement. In this method the general formula for determining the total load which may be supported by a given -soil is expanded to include perimeter shear, as shown by the following relationship:

$$W = Ap = An + Pm$$

In the formula, W is the total load in pounds, A is the pad area in square feet, p is the allowable soil bearing value in pounds/ square foot, P is the pad perimeter in feet, n is the compressive stress (psf) on the soil column directly beneath the pad, and m is the Perimeter shear in pounds/lineal foot.

If the ratio of perimeter (P) to the area (A) is (x) then:

$$p = W/A = mx + n$$

Values of m and n are found by test loading two or more plates having different areas and perimeters. The load which produces the contractor's assumed pad settlement is taken as the allowable stress.

As an example, determine the bearing capacity of a 10-foot square footing if the contractor's proposed pad settlement is one-half inch.

Take two test pads, one two feet square and one three feet square. The smaller supported 25,200 pounds at one-half inch settlement. The larger, 39,700 pounds at the same settlement.

| | W | A | P | |
|---|---|---|---|---|
| Smaller | 25,200 lbs | 4 SF | 8 LF | 25,200 = 4n + 8m |
| Larger | 39,700 lbs | 9 SF | 12 LF | 39,700 = 9n + 12m |

Solving for (m) and (n), m = 2840 lbs/LF and n = 620 psf. For the actual footing, (x) = 40/100 = 0.4. By substituting values of (m), (n) and (x) into the equation p = mx + n, the allowable soil bearing value, p, = 2840(0.4) + 620 = 1755 psf.

## Investigating of Underlying Weak Strata

Test results, as discussed thus far, give only an indication of the allowable soil bearing values at the surface. If a weak underlying strata exists, as indicated in the log of test borings, consideration should be given as to whether this strata will support the actual falsework load without excessive settlement.

An assumption can be made that the load is spread with depth on a l:2 slope as shown in Figure 1, which also shows a typical boring diagram.

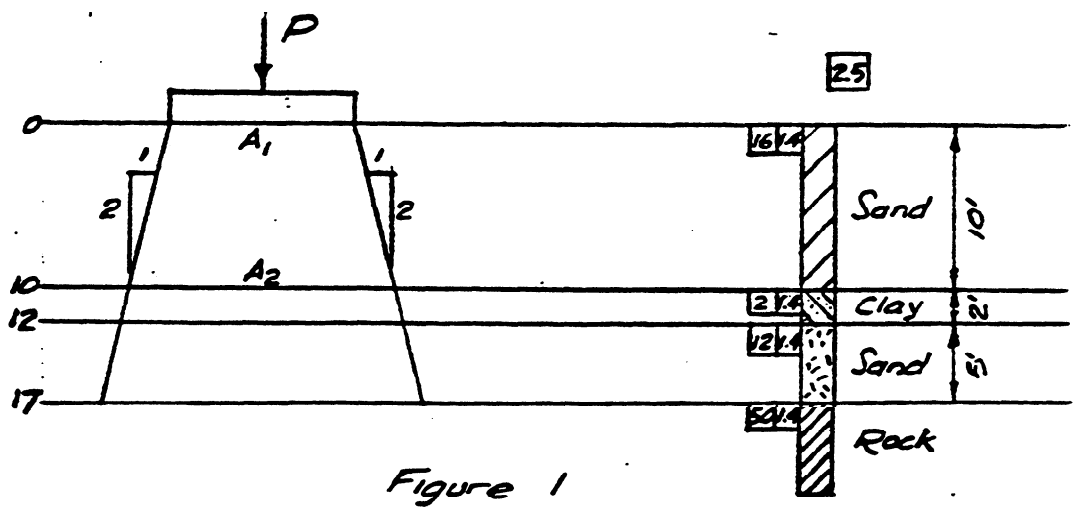


Figure 1

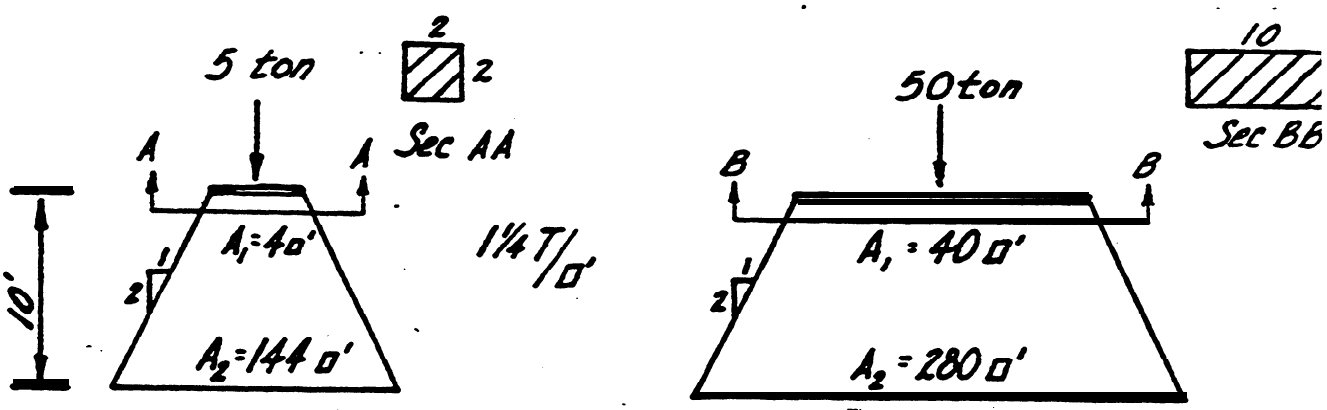


Figure 2

As can be seen, in Figure 2, the soil pressure at the surface is l-l/4 tons/square foot for both the test and the actual falsework pad. The pressure on the weak underlying strata in the test load is 0.035 tons/square foot, a reduction of 36:l due to load spreading. In the actual condition the pressure is 0.18 ton/square foot, a reduction of only 7:l, and this pressure may be more than the strata can safely support.

To help the engineer in his analysis, charts showing allowable soil pressure for clay and sandy soils are reproduced on the following two pages. These charts may be used to give a genera1 idea of the allowable bearing, based on soil classification.

Settlement

With the current emphasis on limited settlement of falsework, the engineer must be able to assess the probability that a given settlement, as predicted by the contractor, will actually occur. Some general statements may help in predicting these settlements.

1. Granular Material

   The maximum settlement will occur under the load as it is applied, and is usually small in magnitude.

2 . Silt and Fine Sand

   A large part occurs as the load is applied. More occurs as the water is squeezed out under long-term loading. If the water table rises, a “quick” condition may result with floatation of the fine grains and a resulting settlement increase at this later date.

3 . Clay

   Again, part of the consolidation occurs as the load is applied, but the rate of consolidation decreases with time. Settlement my also occur due to drying out of clay in the summer. All settlement is due to a squeezing out or loss of moisture in the clay.

# ALLOWABLE BEARING ON SANDY SOILS

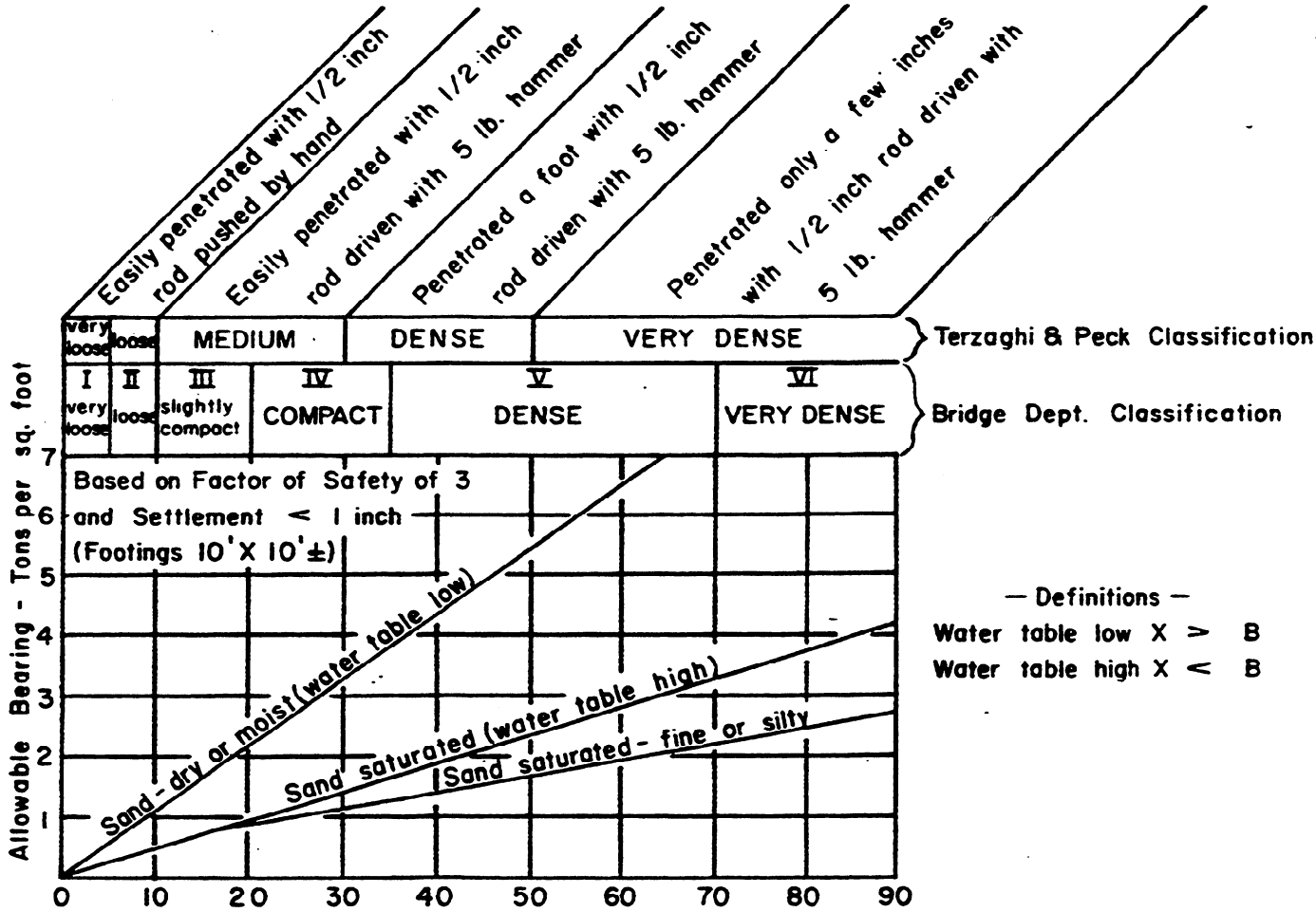


Number of Blows per Foot, 1.4 inch Sampler, 140 lb. Hammer, 30 inch fall
( For 5' X 5' footing allowable bearing may be increased 10 % )

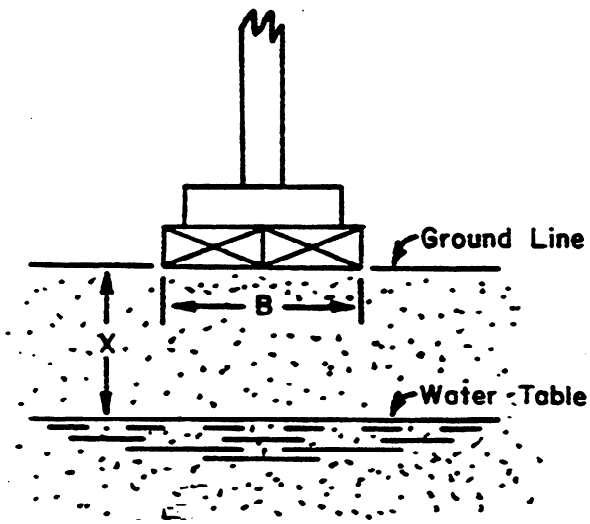


Major matters affecting bearing capacity

1) Position of water table
2) Relative density of sand
3) Width of footing "B"

# ALLOWABLE BEARING ON CLAYEY SOILS

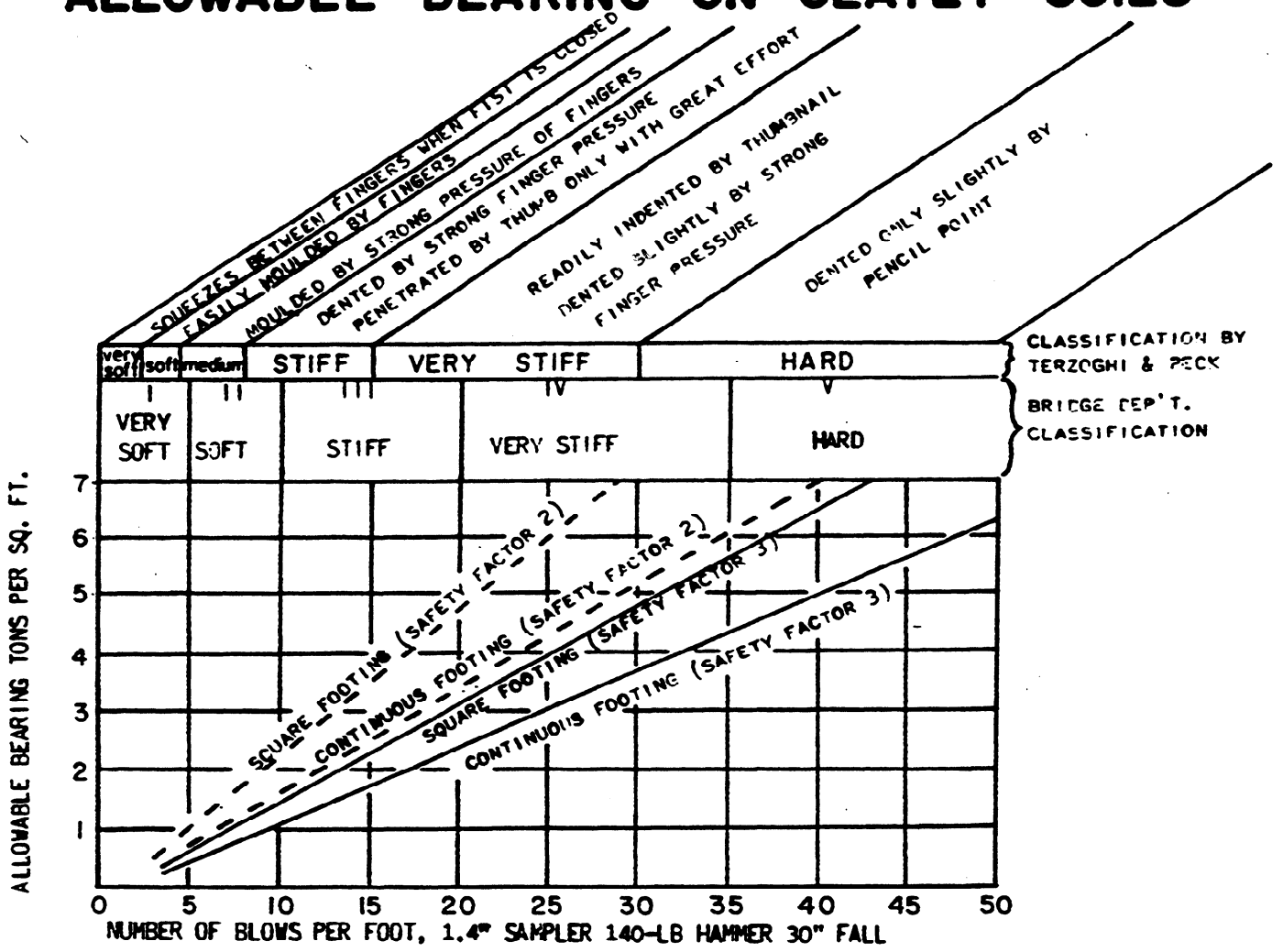


BEARINGS AS GIVEN ABOVE WILL GENERALLY BE CONSERVATIVE FOR CLAYEY SOILS.

WEAK STRATA AT SOME DISTANCE BELOW FOOTINGS MAY IN CASES CAUSE MORE SETTLEMENT THAN SOIL LAYERS IMMEDIATELY BELOW THE FOOTINGS.

FOR SAME UNIT PRESSURE, LARGE FOOTINGS SETTLE MOST. THIS IS PARTICULARLY SO WHERE CLAY STRATA ARE INVOLVED.

GREATEST SETTLEMENTS MAY GENERALLY BE EXPECTED AT CENTERS OF LOADED AREAS.

SETTLEMENTS TEND TO INCREASE WITH THE FOLLOWING:

1) SOFTNESS OF THE CLAYEY MATERIAL.
2) THICKNESS OF THE COMPRESSIBLE STRATA.
3) CLOSENESS OF CLAY STRATUM TO GROUND SURFACE.
4) AMOUNT PROPOSED LOADING EXCEEDS PAST LOADING
5) WIDTH OF FOOTING OR LOADED AREA.
6) HEIGHT OF WATER TABLE.
7) LIQUID LIMIT.

SHEAR FAILURES ARE MOST APT TO OCCUR WHEN:

1) FOOTINGS ARE SMALL.
2) SETTLEMENTS ARE LARGE.

Index to Appendix C - Falsework Memos

| Memo | Date Issued | Subject |
|---|---|---|
| 1 | 06/95 | Falsework Reminder List |
| 2 | 07/01/88 | Waste Slabs as Falsework |
| 3 | 09/99 | Falsework Over Traffic |
| 4 | 07/01/88 | Load Testing of Manufactured Products |
| 5 | 03/29/89 | C-Clamps |
| 6 | 07/10/88 | Longitudinal Force Resistance Connectors |
| 7 | 09/99 | Falsework Over And/Or Adjacent To Union Pacific Railroad Company Tracks |
| 8 | 04/93 | Splicing of Falsework Posts |
| 9 | 11/91 | Short Poured-In-Place Concrete Piles to Resist Uplift and Lateral Loads |
| 10 | 07/01 | Falsework Welding |
| 11 | 07/01 | Cap Beam Center Loading Strips |
| 12 | 10/91 | Falsework Tower Stability |
| 13 | 03/93 | Aluma Frame Shoring Systems |
| 14 | 02/93 | WACO 25 Kip Towers |
| 15 | 03/93 | Pile Collars |
| 16 | 05/93 | 100K Hi-Cap Bridge Shoring |
| 17 | 03/93 | Concrete Pads |
| 18 | 06/95 | Blank |
| 19 | 06/95 | Blank |
| 20 | 05/94 | Pipe Frame Shoring |
| 21 | 12/94 | Structural Composite Lumber |

# FALSEWORK REMINDER LIST

I. WHERE TO FIND FALSEWORK INFORMATION

A. Falsework Manual (January 1988) with subsequent revisions.

B. Special provisions

Project specific requirements and considerations.
Requirements for traffic openings. (Section 10)
Railroad requirements. (Section 13)

C. Standard Specifications

5-1.02 Plans and Working Drawings.
7-l.09 Public Safety (includes pedestrian openings).
12-3 Traffic Handling Equipment and Devices (includes K-rail).
49-l.08 Pile Bearing Value.
51-l.06 Falsework.
55-1.05 Falsework (related to steel structures),
86-6.11 Falsework Lighting.

D. Bridge Construction Records and Procedures Manual*

Vol I 2-11.0 Traffic Control (Impaired Clearance).
Vol I 8-7.0 Notice of Impaired Clearance on RR Property.
Vol I 16 Form No. DS-OS-Cl08 (Falsework Clearances).
Vol II 120-1.0 Submitting Falsework Drawings.
Vol II 120-2.0 Impaired Clearance at Traffic Openings.
Vol 11 125-1.0 Lost Deck Forms.
Vol II 125-2.0 Soffit Forms-
Vol II 135-5.0 Mechanical' Anchorage Devices (Permanent work).
Vol II 160-7.0 Stressing Incomplete Bridges.
Vol II 165-4.0 Welded Wire Fabric (For use in PCC pads).
Vol II 180-Var Welding (Permanent work).

E. Cal-OSHA Construction Safety Orders (Sections 1503 & 1717)

F. Division of Structures Falsework Engineer (916-227-8809)

II. PRE-JOB CONFERENCE (SUGGESTED DISCUSSION TOPICS)

A. Falsework Design Review and Approval

1. Review time allowed.
2. Review time starts when a complete submittal is received.
3. Information required for complete submittal. (Refer to "Initial Review" in Chapter 2)
4. For proprietary products, submittal must include technical data (includes hardware items such as overhang brackets, jacks, hangers, etc., and all commercial shoring systems).
5. For cable bracing systems, submittal must include manufacturer's technical data.
6. Determining review duration; falsework review clock.
7. Review time adjustment for design revisions.
8. Priority listing for multiple submittals-
9. Falsework erection cannot begin until drawings are approved.

B. Falsework Erection and Removal Plans

1. Project specific considerations.
2. Show or describe erection and removal procedure on drawings.

C. Traffic Considerations (if applicable).

D. Railroad Involvement (if applicable).

E. Application of Construction Safetv Orders (Sections 1503 & 1717).

*For interdepartmental use only

**FALSEWORK REMINDER LIST**

III. DESIGN LOADS

A. Vertical Design Loads

1. Minimum vertical design load (dead load plus live load) on any falsework member is 100 $lb/ft^2$. This includes supports for a construction walkway extending beyond edge of deck.
2. For stress analysis, design dead load is weight of concrete, forms, reinforcing steel and falsework members. Weight of concrete, forms and reinforcing steel is based on assumed unit weight of 160 $lb/ft^3$ for normal weight concrete or 130 $lb/ft^3$ for lightweight concrete.
3. For deflection, design dead load is based on actual concrete unit weight.
4. Design live load includes the following:
   (a) 20 $lb/ft^2$ over the total area supported by the member under consideration.
   (b) 75 lb/LF at edge of deck overhang acting over a maximum of 20 feet. (FW Manual 3-l.04)
   (c) Weight of equipment (finishing machine, etc.) applied as a concentrated load at point of contact.

B. Horizontal Design Load

Greater of the following:
(a) Load due to equipment, construction sequence or other cause, plus appropriate wind load.
(b) 2 percent of the total supported dead load at the point under consideration.

C. Miscellaneous Load Considerations

1. Increased vertical design load at traffic openings.
2. Increased vertical load at hinges due to load redistribution caused by prestressing forces.
3. For structures over flowing water, horizontal load caused by stream flow pressure.
4. Loads due to vertical and horizontal components of cable design loads.

IV. INFORMATION TO BE SHOWN ON FALSEWORK DRAWINGS

A. All Items Listed in "Initial Review" Section in Chapter 2.

B. Anticipated Settlement (not to exceed one inch.)

C. Pads and Piles

1. Assumed soil bearing value for pad foundations.
2. Joint location in continuous timber pads.
3. Design details for concrete pads.
4. For timber piles, design bearing value; tip and butt diameter.
5. For timber pile bents, driving tolerances (maximum $\Delta$ and e).
6. Design details for CIDH piles.

D. Dimensions

1. Falsework span lengths (must add up to structure span length).
2. Post and stringer spacing.
3. Vertical distance between connections in diagonal bracing.
4. Height of bents (if needed to check bracing and L/d ratios)*
5. Size of all load supporting members.

E. Timber Bracing
1. Type of connection (single or double shear).
2. Type, size and number of fasteners at each connection.

E. Cable Bracing
1. Number and size of cables in each cable unit.
2. Number and type of connectors (Crosby clips, etc.)
3. Detail showing method or device by which cable will be attached to falsework components, and location of attachment.
4. For external bracing systems, method of cable anchorage.
5. For internal bracing systems, cable preload value and method by which preload force will be applied and measured.

F. Welding and Welded Connections
1. For fillet welds, length and nominal size of weld.
2. For butt welds, welding procedure (to conform to AWS requirements) must be shown on the drawings.

G. Commercial Shoring Systems
For all commercial shoring systems, the trade name and nominal load-carrying capacity (i.e., WACO ll-kip shoring, PAFCO 100-kip shoring, etc.) must be noted on the drawings-

E. Erection and Removal Plans
The method or procedure to be followed, including details for temporary bracing if used, for falsework erection and removal must be shown or described on the drawings.

V. DESIGN CONSIDERATIONS.

A. Plywood
Deflection within limits?

B. Beams and Stringers
1. Joist stresses OK at girder flares, diaphragms and caps?
2. Timber beams stable against buckling and rollover?
3. Steel beams have compression flange supported where necessary?
4. Steel beams checked for bi-axial bending?
5. Camber strips centered on stringers and OK for compression?
6. Beam deflection limited to L/240 under weight of concrete only?
7. For continuous beams, effect of beam continuity checked? beam uplift prevented?

C. Posts and Columns
1. Timber post L/d checked; allowable stress reduced if necessary?
2. Timber post splices meet criteria in FW Memo 8?
3. Steel post L/r checked; allowable stress reduced if necessary?

D. Bracing
1. Diagonal bracing (members and connections) meets Chapter 5 criteria?
2. Timber members adequately sized to accommodate number of fasteners required?
3. Fastener capacity values adjusted for load duration?
4. Proper connection at center of crossing X's?
5. For steel bracing, welded connections meet applicable design criteria? (FW Manual 4-4.08)
6. For cable bracing, manufacturer's technical data reviewed? Load test performed if required?
7. For cable bracing, cable attached to falsework cap, not posts or columns? cable anchorages checked for uplift?



to falsework cap, not posts

# FALSEWORK REMINDER LIST

E. Deck Overhangs
1. Minimum vertical load (100 psf) on construction walkways?
2. Load reduced for falsework spans exceeding 20 feet? (FM Manual 3-1-04.)
3. Differential beam deflection considered? (FW Manual 3-3.06)
4. Additional requirements for deck overhangs on steel girder bridges considered? (FW Manual 3-3.07)

F. Foundations
1. Assumed pad soil bearing value compatible with site conditions? wet or dry conditions? soil load test required?
2. Pad joint location meets design criteria? (FW Manual 7-2.05)
3. Bearing adequate at post/corbel interface? steel plates required?
4. For multiple-corbel systems, spacing OK? (FW Manual 7-2.03C)
5. Bearing on timber piles not over 45 tons?
6. Additional considerations for timber pile bents
   . Driving tolerances reasonable?
   . Required penetration realistic?
   . Bracing meets design criteria?
   . Horizontal deflection considered?
   . P-delta deflection considered?
   . Longitudinal stability adequately addressed?

G. Commercial Shoring Systems
1. Currently approved systems (as of 06/95)
   (a) Pipe-frame systems
      . WACO
      . PATENT
      . Burke-Aluma
   (b) Intermediate strength systems
      . WACO
   (c) Heavy duty systems
      . PAFCO
      . WACO
      . WADC0
      . Hi-Cap
2. Manufacturer's technical data furnished and reviewed?
3. Design loads comply with manufacturer's recommendations for all loading conditions?
4. Shoring design in accordance with manufacturer's recommendations and falsework manual design criteria? (See Chapter 6)
5. Cable bracing, if used, connected to cap at top and to external support at bottom? (If not so connected, manufacturer's statement of authorization is required.)
6. Cable design load meets falsework manual criteria?

H. Longitudinal Stability (FW Manual 5-l.04)

1. Overturning Stability (FW Manual 5-1.05)

J. Erection and Removal Plans
1. Falsework components stable during all stages of erection and removal?
2. If used, temporary bracing (including connections) meets minimum design load criteria? (Wind load is minimum design load.)
3. For removal see "CONSTRUCTION CONSIDERATIONS"

K. Miscellaneous Considerations

1. Method of grade adjustment
   . Adequate jacking space?
   . Sufficient bearing area on wedge surfaces?
   . Sand jack integrity assured?
2. Use of friction to resist horizontal forces. (FW Manual 3-3.03; FW Memo 5 for C-clamps)
3. For falsework at hinges, load redistribution due to application of prestressing forces. (FW Manual 3-3.04)
4. Proprietary products used in accordance with manufacturer's recommendations?manufacturer's technical data furnished and reviewed? (Manufacturer's technical data is required for all proprietary products used in the falsework, and for all cable installations.)
5. Lost deck falsework. (See FW Manual 4-2.03D & 9-l.09)

VI. ADDITIONAL DESIGN CONSIDERATIONS AT TRAFFIC OPENINGS

A. Clearances

1. Check Horizontal (H) and Vertical (V) Clearances:

| | | | |
|---|---|---|---|
| Traffic: | FW Plans: | H_____ | V_____ |
| | Specials: | H_____ | V_____ |
| Pedestrian: | FW Plans: | H_____ | V_____ |
| | Specials: | H_____ | V_____ |

2. Openings conform to District requirements?
3. Vertical clearance sign required? (For vertical clearance, consider beam deflection and post settlement. Sign required for vertical clearance less than 15 feet.)
4. K-rail length and clearance to falsework OK? (For minimum K-rail clearance to falsework see FM Manual Figure 8-1.)

B. Design requirements for Posts Adjacent to Roadways

1. Minimum section modulus about each axis:
   For steel posts $S_{Min.} = 9.5\ in^3$
   For timber posts $S_{Min.} = 250\ in^3$.
2. Post design load is greater of:
   (a) 150 percent of normal post loading.
   (b) Increased or readjusted loads caused by prestressing forces and/or cable bracing or tiedowns.
3. 5/8" diameter or larger bolts used at connections for both ends of timber bracing; appropriate connections for cable bracing.
4. Mechanical connections to resist impact.
   . 2000 lb capacity for post-to-sill-to-base connections effective in all directions except toward the roadway.
   . 1000 lb capacity for cap-to-post connection effective in any direction.
   . 500 lb capacity for certain stringer-to-cap connections effective in all directions including uplift.

C. Falsework Lighting (Standard Specs. 86-6.11)

1. Lighting Plan
   . Included with falsework drawing submittal?
   . Separate submittal?
2. Portal lighting and white panels.
3. Roadway illumination. (Standard Specs. & special provisions)
4. Pedestrian walkway lighting, if applicable.

D. Pedestrian Openings (Standard Specs. 7-1.09)
1. Paved passageway or wooden walkway?
2. Handrail per Cal-OSHA requirements?
3. Overhead debris protection?
4. Lighting adequate?

VII. RAILROAD REQUIREMENTS (See FW Manual 2-1.06B)

A. General
1. Project specific railroad requirements are found in Sections 10 and 13 of the special provisions.
2. Working drawings for construction features affecting railways are to be approved by the Railroad Company involved prior to approval by the Structure Representative.

B. Clearances (See special provisions for minimum clearance requirements. Planned clearances must be shown on FW drawings.)
1. Check Horizontal (H) and Vertical (V) Clearances
FW Plans: H_____ V_____
Specials: H_____ V_____
2. Vertical clearance measured from top of rail. (For minimum clearance, consider beam deflection and settlement.)
3. Horizontal clearance measured from centerline of tracks.

C. Design Requirements for Posts Adjacent to Railroads
1. Minimum section modulus about each axis:
For steel posts $S_{Min.} = 9.5\ in^3$
For timber posts $S_{Min.} = 250\ in^3$.
2. Post design load is greater of:
(a) 150 percent of normal post loading.
(b) Increased or readjusted loads caused by prestressing forces And/or cable bracing or tiedowns.
3. 5/8" diameter or larger bolts used at connections for both ends of timber bracing; appropriate connections for cable bracing.
4. Mechanical connections to resist impact.
. 2000 lb-capacity for post-to-sill-to-base connections effective in all directions except toward the railroad track,
. 1000 lb capacity for cap-to-post connection effective in any direction.
. 500 lb capacity for stringer-to-cap connections effective in all directions including uplift.

D. Bents Within 20 Feet of Track Centerline
1. Solid sheathing (5/8-inch plywood or l-inch nominal thickness lumber) between 3 and 17 feet above track on track side of bent. (Atchison, Topeka and Santa Fe Railway Company may want chain link fencing in lieu of sheathing on Amtrak lines.)
2. Bracing designed to resist the horizontal design load, but not less than 5000 pounds.

E. Collision Posts
Show location on general plan sheet for Southern Pacific Transportation Company only. (Optional for other railroads.)

# FALSEWORK REMINDER LIST

VIII. FALSEWORK DRAWING APPROVAL

A. General

l. "Plan Approval" stamp on each sheet, signed by structure representative or by staff member who actually reviewed the design and is a registered civil engineer.

2. Approval letter signed by structure rep. (FW Manual 2-1.06A)

3. Plan distribution when railroad not involved

. One set to contractor, with approval letter.

. One set to Sacramento office, with copy of engineer's calcs.

. One set retained in job files, with engineer's calcs.

. Remaining sets for field use.

B. Procedure When Railroad Company is Involved

1. DO NOT APPROVE DRAWINGS UNTIL NOTIFIED BY SACRAMENTO OSC THAT DRAWINGS ARE SATISFACTORY TO THE RAILROAD.

2. After review of drawings, send drawings and calculations to Sacramento with a cover memo; memo to include the following information:

. Name of railroad company

. County, route, and post mile

. Contract number

. Bridge name and member

3. See "Procedure when Railroad Company Approval is Required" in Chapter 2 for number of sets of drawings and other information pertaining-to falsework drawing approval on railroad projects.

XI. CONSTRUCTION CONSIDERATIONS

A. Falsework Erection Plan

Before falsework erection begins, review erection plan with State and contractor personnel. (FW Manual 9-1.02)

B. Pad Foundations

1. Foundation material adequate to support design soil pressure? soil bearing test needed? (Appendix B includes information on soil bearing values and soil load testing.)

2. Splices in continuous pads located properly? If not, is pad redesign required?

3. Pads protected from flooding and surface runoff?

C. Pile Foundations

1. Required pile bearing value obtained?

2. For pile bents, penetration and driving tolerances meet design assumptions? If not, is redesign required?

D. Timber Construction

1. Timber quality OK for design stresses?

2. Connections conform to design details? connectors properly installed?

3. Workmanship adequate? (FW Manual 9-l.04B)

E. Manufactured Assemblies

l. All commercial products and devices used and installed in accordance with manufacturer's recommendations?

2. Contractor's certification furnished?

## FALSEWORK REMINDER LIST

F. Metal Shoring Systems
   1. Assembly meets industry standards? (FW Manual 9-l.07)
   2. Contractor's certification furnished?
   3. If components from different systems are intermixed, has contractor furnished letters of approval from each manufacturer whose system is used? (FW Manual 9-l.07)

G. Cable Bracing
   1. Cable is same size and type shown on falsework drawings?
   2. Connections conform to falsework drawing details?
   3. Crosby clips properly installed and torqued?
   4. For internal bracing systems, preload force applied? preload force applied twice for cables attached to timber members?

H. Traffic Openings
   1. Clearance notification
      . Notify resident engineer and/or District permits engineer of minimum vertical clearance not less than 2 weeks before falsework erection begins.
         CRAP Manual -- Vol I Section 2-11.0
         CRAP Manual -- Vol II Section 120-2.0
      . Re-notify after erection if actual clearance is different.
   2. White panel boards properly positioned?
   3. Portal lighting inspected after dark?

I. Field Changes
   1. All changes documented?
   2. For substantial changes, revised drawings submitted for approval? (FW Manual 9-1.12)

J. Certification by Registered Engineer (FW Manual 9-l.13)

K. Inspection after Concrete Placement (FW Manual 9-l.15)

L. Falsework Removal
   l. Falsework removal plan reviewed with State and contractor personnel? (FW Manual 9-1.16)
   2. Falsework components stable during all stages of erection and removal?
   3. Effect of temporary unbalanced and/or eccentric loads, effect of jacking loads, and effect of crane set on the permanent structure all considered?
   4. For removal using winches set on deck, winch load adequately distributed?
   5. For stage construction, effect of removal sequence considered? (FW Manual 3-3.05 & 9-1.16A)

# WASTE SLABS AS FALSEWORK

A waste slab is a P.C.C. slab finished to a smooth surface which is set to the soffit grade of a bridge superstructure. It is cast on compacted material in a fill or in a cut and becomes the bottom soffit form for the structure. On completion of the structure the fill or cut material along with the slab is removed to final cross section.

We will consider the use of these slabs to be a construction method and not falsework as defined by the falsework manual. In order to check the adaquacy of the slabs the Structure Representative should require working drawings as outlined in Section 5-l.02 of the Standard Specifications.

Some factors to be considered are:

1 . Type of material under the slab.

2 . Amount and depth of compaction.

3 . Load on slab.

4 . Thickness.

5 . Finish.

6 . Bond breaker.

7 . Settlement (subsidence with time if on fill).

# FALSEWORK OVER TRAFFIC

When contract language prohibits falsework erection and removal over traffic, the following definitions of erection and removal are to be used:

Erection is defined to include the adjustment of falsework grades prior to concrete placement when that falsework grading requires the adjustment or removal of falsework components that contribute to the horizontal stability of the falsework system. The adjustment of falsework grades over lanes that are open to public traffic shall not be allowed unless all falsework components that contribute to the horizontal stability of the falsework system are complete in place prior to the commencement of the grading operation.

Removal is defined to include the lowering, releasing, or adjusting of falsework after the concrete is placed. Removal includes lowering falsework, blowing sand from sand jacks, turning screws on screw jacks, and removing wedges.

# LOAD TESTING OF MANUFACTURED PRODUCTS

It will occasionally be necessary to field test falsework devices, components or systems. In general, all field testing should provide for a minimum safety factor of 2.5. Systems can be tested to a predetermined value or to failure. The working value of similar components or systems would then be 40% (l/2.5) of the accepted test result.

Testing should provide for, as a minimum, the following criteria:

A . Cyclic loading using a minimum of 10 cycles.

B . Measurement for strain, stress or other values.

C . Increasing load incrementally and noting effects.

D . Other necessary features unique to the system tested.

Testing criteria and result evaluation should be discussed with the falsework section of the Office of Structure Construction prior to testing.

Following is an example of the testing criteria used for the approval of C-clamps:

TESTING

Testing shall conform to the following criteria:

A . The system will be loaded to 2.5 times its design load and cycled from zero to maximum load 10 times.

B . The maximum allowable slip between flange and angle shall not exceed l/8" total.

C. Clamp body is not to bear on flange or angle.

D. Measure strain in clamp when tightened, after test and upon release.

E . Torque clamp to predetermined level and remeasure after test.

FIELD TEST APPROVED C-CLAMP

The following describes non-commercial shop fabricated C-clamps tested in accordance with the testing criteria described above:

> The test was performed with two C-clamps holding an angle to the bottom side of a WF section. The other leg of the angle abutted a 12 x 12 timber. Significant C-clamp slip occurred when the WF beam was loaded to 16,000 pounds. No significant slip was observed for the 10 test loadings of up to 15,000 pounds applied to the end of the WF section. Test loadings were performed with a hydraulic jack equipped with a gage. See Figure 1 for loading configuration.

Based on the test results the above described C-clamp may be used to resist horizontal forces up to 3,000 pounds per clamp when these clamps are torqued to 90 foot-pounds. The 3,OO0 pound value per clamp equals the 15,000 pound test load divided by a 2.5 safety factor divided by 2 clamps. Use will be restricted to beams with non-sloping flanges.

In addition to the above, approved C-clamps may be used to resist 500 pound loads applied to falsework from any direction providing the clamps are not installed on the tail end of stingers. Clamps used in this capacity shall be installed on the supported side of the beam or stringer which is to be the heaviest loaded.

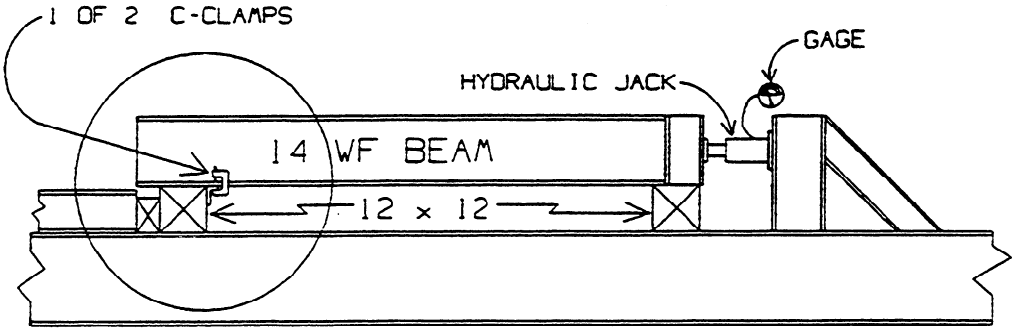


# TEST BED

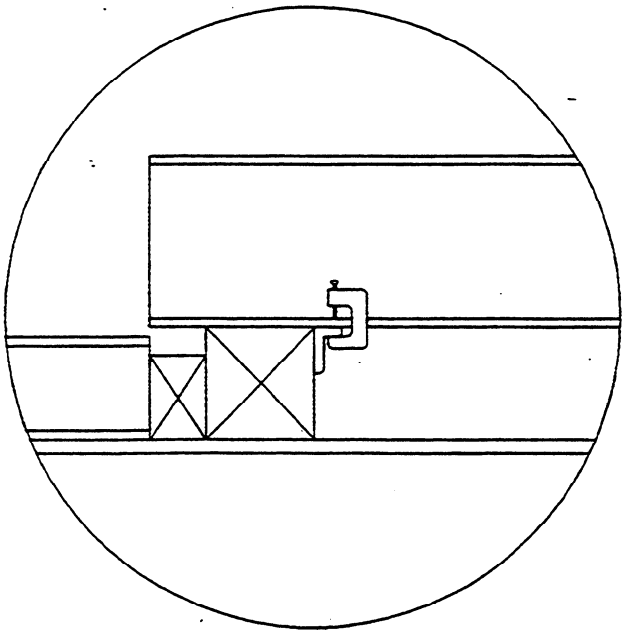

1 OF 2 C-CLAMPS HOLDING ANGLE TO BOTTOM FLANGE OF 14 WF BEAM (ONE EACH SIDE)

**FIGURE 1**

# C-CLAMPS

CRITERIA FOR USE

Based on the results of field testing, C-clamps in conjunction with angles-clamped to beams, will be permitted for transmitting longitudinal forces in accordance with the criteria contained in this memo.

RESTRICTIONS FOR USE

The use of approved C-clamps is to be in conformance with the following:

**A.** For clamping constant thickness flanges, angle legs or plates connecting steel sections. They are not to be used in conjunction with beveled or sloping surfaces.

**B.** When used as shown in Figure 1, clamps may resist longitudinal forces at a maximum value of 3,000 pounds per clamp and may be used on either, or both, sides of caps.

**C.** For resisting the specified 500 pound force in any direction.

**D.** A C-clamp used to resist longitudinal forces may not be used to resist other forces also. Similarly, a clamp used to resist a 500 pound force may not be used to resist other forces.

**E.** Clamps used to connect steel beam stringers to steel caps (to resist a 500 pound force) are to be placed on the heaviest loaded span side of falsework stingers. Clamps are not to be installed on the tail end of beams or stringers.

**F.** Beams and caps shall not be clamped together to resist longitudinal forces.

**G.** C-clamps are to be torque tightened to 90 foot-pounds,

RESTRICTIONS ON C-CLAMPS

C-clamps permitted for use shall conform to the following:

A . Commercial heavy duty service pattern clamps (generally drop forged premium quality steel) with not less that a 10,000 pound load limit.

B . C-clamp must remain in the elastic range while withstanding a torque of 90 foot-pounds load on the bolt.

C . Bolt diameter is to be not less than 3/4 inch with a hardened cup end.

D . Non-commercial C-clamps shall conform to those same. restrictions, Figure 2 depicts an approved non-commercial C-clamp.

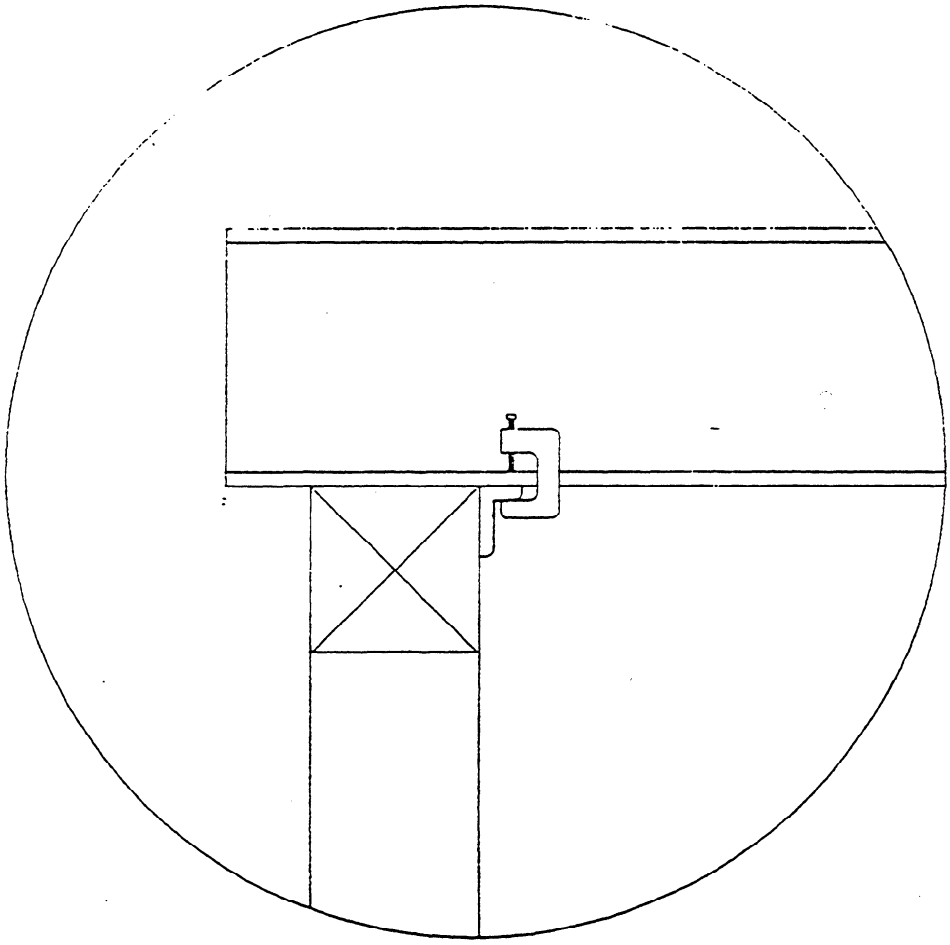

1 OF 2 C-CLAMPS HOLDING ANGLE TO BOTTOM FLANGE OF BEAM (ONE EACH SIDE)

**FIGURE 1**

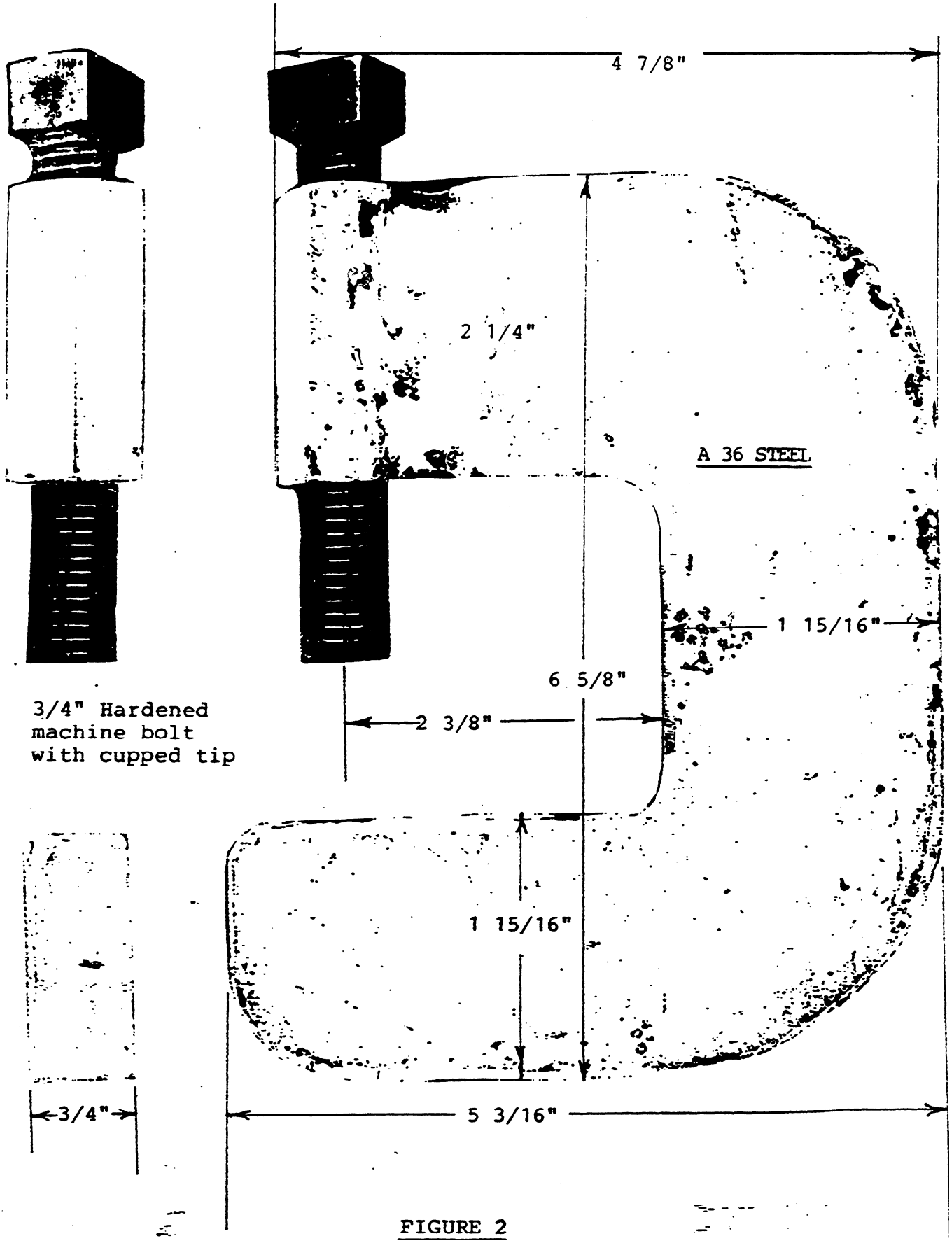
4 7/8"
2 1/4"
A 36 STEEL
1 15/16"
6 5/8"
2 3/8"
3/4" Hardened
machine bolt
with cupped tip
1 15/16"
3/4"
5 3/16"

FIGURE 2

# LONGITUDINAL FORCE RESISTANCE CONNECTORS

Simple non-commercial connection devices used to transmit longitudinal forces along the length of falsework stringers have been tested and approved for use.

Each connector consisted of 2 one-half inch thick steel plates approximately 6" long by 2 1/4" wide bolted at one long end of each plate. Connectors were installed on the top flanges of the WF beams with lower plates butting beam webs, bolts butting beam ends, with top plates parallel. with the interconnecting banding atop the top flanges. The top plate had a rectangular recess opposite the bolt end large enough to accommodate the banding. The recess had a rounded edge to prevent damage to the banding. The banding waslooped through the plate recesses of the connectors with the tail ends conventionally connected with a banding clip. Figure No. 1 shows the banding connector and method of installation on the beams.

TEST RESULTS

Performance testing of steel plate connectors placed at ends of wide flange steel beams as shown in Figure 1 indicated that the connectors were stronger than single 1 l/4" wide by 0.035" thick banding when the ends of the wide flange beams, placed parallel and touching, were loaded longitudinally.

PERMITTED USE

Based on the above test results these connector devices will be allowed a working force value of 5,000 pounds per connection when used with a single 1 l/4 " wide X 0.035" thick band. This working force value provides for a 2.5 factor of safety for the beam connector components and a safety factor, based on manufacturers strength values, of 2.18 for the single loop banding.

A safety factor of 2.18 will be acceptable for banding because manufacturer's strength values are adjusted to the lower end of the average value range.

Resisting load values for this type of connector may be 5,000 pounds per connection if the single shear value of the bolt exceeds 5,000 pounds and the minimum banding capacity equals 5,450 pounds (single loop value = 5450(2)/2.18=5,000 pounds). Banding capacity is to be the manufacturer's average strength recommendation adjusted for a minimum 2.18 factor of safety.

The 5,000 pound working force value may be used when the angle between center lines of banding and beam webs does not exceed 30°. For larger angles decrease the working force value by 1700 pounds for each l0° increment in excess of 30°.

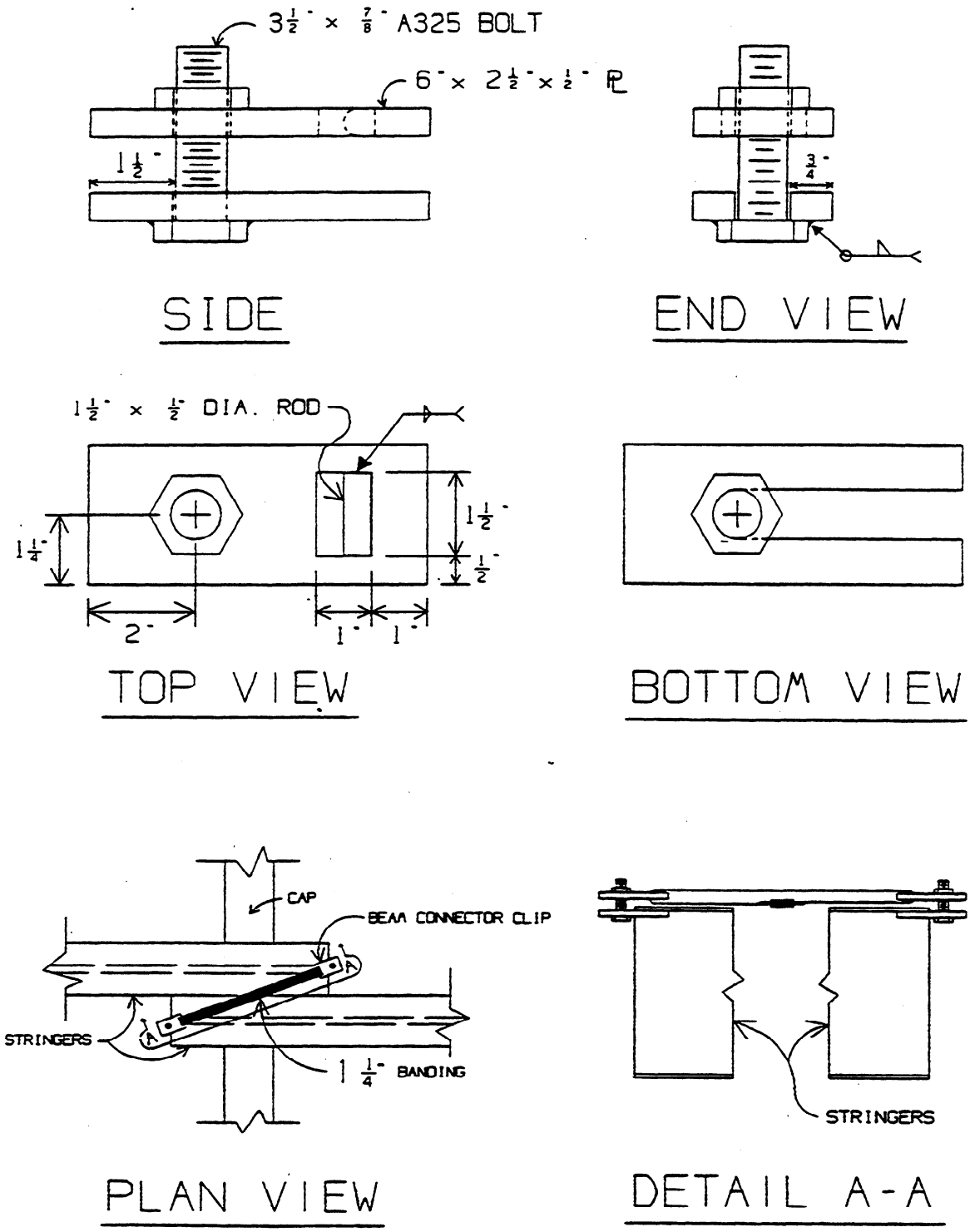
3½" × ⅞" A325 BOLT
6" × 2½" × ½" PL
1½"
¾"
SIDE
END VIEW
1½" × ½" DIA. ROD
1¼"
1½"
½"
2"
1"
1"
TOP VIEW
BOTTOM VIEW
CAP
BEAM CONNECTOR CLIP
STRINGERS
1¼" BANDING
STRINGERS
PLAN VIEW
DETAIL A-A

**FIGURE I**

# FALSEWORK OVER AND/OR ADJACENT TO UNION PACIFIC RAILROAD COMPANY TRACKS

## Railroad Guidelines

Until the Union Pacific Railroad Company (UPRR) issues new guidelines, falsework design for contracts involving UPRR facilities shall be in accordance with the Southern Pacific Lines (SPL) guidelines titled *GUIDELINES FOR DESIGN OF FALSEWORK FOR STRUCTURES OVER RAILROAD IN CONNECTION WITH HIGHWAY GRADE SEPARATION CONSTRUCTION*, with the exceptions noted herein. Refer to Attachment No. 1 for a copy of this guideline.

The contract special provisions will list the clearance requirements measured from the centerline of the railroad tracks. If clearances are not included in your contract documents, refer to UPRR Std. Dwg. 0035, "Barriers and Clearances to be Provided at Highway, Street, and Pedestrian Overpasses" for minimum construction clearance requirements. Refer to Attachment No. 2 for a copy of this drawing. This drawing shows the latest UPRR clearance requirements and will be incorporated into future contracts.

**Where there is a conflict between the contract specifications and the guidelines issued by the railroad, the contract specifications shall prevail**.

## Railroad Requirements

It should be noted that the UPRR does not require the use of temporary collision posts. If collision posts are required per the contract special provisions, a contract change order may be prepared to eliminate them.

The UPRR has requested that drawings accompanying falsework plans be submitted on 11"x17" (279.4 mm x 431.8 mm) sized paper. Future special provisions will be revised to state this requirement. Until this request becomes a specification requirement, you may request that the contractor submit the three sets of falsework plans for railroad review on 11"x17" (279.4 mm x 431.8 mm) sized paper.

Some common requirements are often overlooked and have resulted in submittals being returned by the railroad. The falsework plans should note how the contractor will gain access to the site, particularly if they must cross the railroad tracks. Track protection details are shown in the UPRR's *GUIDELINES FOR PREPARATION OF A BRIDGE DEMOLITION AND REMOVAL PLAN FOR STRUCTURES OVER RAILROAD*. Refer to Bridge Construction Memo 124-3 for a copy of this guideline.

The falsework plans should note if there are any existing drainage ditches or access roads being affected by the Contractor's operations related to the falsework system. If there are no existing drainage facilities or access roads, the falsework drawings should note this fact. Keep in mind that personnel from the railroad who are unfamiliar with the site often review the falsework plans.

The above railroad requirements should be discussed at the pre-construction meeting with the Contractor. It should also be stated that approval of falsework plans over and/or adjacent to UPRR tracks will be contingent upon UPRR approving the plans.

Distribution of Falsework Plans

The Structure Representative will review the falsework plans, and if necessary, return them to the Contractor for correction. Refer to Section 2-1.06B, "Procedure when Railroad Company Approval is Required", of the Falsework Manual for further requirements.

After the Structure Representative reviews and is satisfied that the falsework plans meet the specification requirements, he/she shall send the following items to the Division of Structure Construction Headquarters (DSC HQ):

1. Letter of transmittal from the Structure Representative listing all information submitted and stating the falsework plans and calculations have been reviewed and that they are considered to be satisfactory.
2. Four copies of Contractor's falsework plans (a minimum of three sets of 11"x17" drawings for the railroad is preferred)
3. Three copies of the Contractor's calculations, tabbed to show key elements affecting the falsework over and adjacent to the railroad company's tracks
4. Three copies of Structure Representative's calculations, tabbed to show key elements affecting the falsework over and adjacent to the railroad company's tracks
5. Three copies of manufacturer's data relative to manufactured devices

Note: One copy of the above is for the DSC HQ office use, and the other copies are forwarded to the railroad. In the event that railroad personnel at the job site need copies of the above information, they are to obtain them from their headquarters.

The Structure Representative should not stamp the falsework plans 'Approved' until DSC HQ has notified them that the railroad has reviewed and accepted the falsework plans.

In order to complete the falsework review within the contract time specified, the Structure Representative should expedite their review and forward the submittal to the DSC HQ (Attention: John Gillis) via overnight mail.

Railroad Review and Approval

Incomplete or unsatisfactory data will be returned to the Structure Representative for correction. The DSC HQ will review this submittal package. Upon confirming that the plans and calculations are complete and satisfactory, the information will be forwarded to the railroad via overnight mail for their review and acceptance.

*Please note that all correspondence with the railroad regarding the status of submittals under their review should be directed to John Gillis. At the railroad's request, in no case should you contact the railroad directly.*

When the railroad completes their review and finds the plans to be acceptable, they will advise the DSC HQ who will in turn advise the Structure Representative that the railroad considers the falsework plans to be satisfactory. The Structure Representative will then stamp the plans 'Approved' and send a letter to the Contractor stating that the plans have been reviewed and approved. Assuming proper notification has been made to the UPRR that their horizontal and vertical clearances will be impaired and that a flagger is required, the Contractor may begin falsework construction. Note that the Contractor must not begin falsework construction of any components of the falsework system within the railroad right-of-way, including pads and piles, until such time as the approval letter has been issued to the Contractor.

Attachments

# GUIDELINES FOR DESIGN OF FALSEWORK FOR STRUCTURES OVER RAILROAD IN CONNECTION WITH HIGHWAY GRADE SEPARATION CONSTRUCTION

OFFICE OF
CHIEF ENGINEER
SAN FRANCISCO, CA

N.G.P.

SP13

# SOUTHERN PACIFIC LINES

## GUIDELINES FOR FALSEWORK DESIGN

### I. GENERAL:

Falsework which is to be constructed over the Railroad operating tracks shall be designed in accordance with the following provisions.

The Contractor shall be responsible for designing and constructing safe and adequate falsework which provides the necessary rigidity, supports the loads imposed, and produces, in the finished structure, the lines and grades indicated on the plans.

Approval by the Railroad of the designs and working drawings will not relieve the submitting agency and/or Contractor of the ultimate responsibility and liability for the falsework.

### II. FALSEWORK DESIGN AND DRAWINGS:

The Contractor shall submit to the Engineer working drawings and design calculations for the falsework proposed for use at bridges. For falsework over railroad tracks, drawings shall be signed by a registered Civil Engineer in the State where the proposed falsework is to be constructed. Three (3) sets of the drawings and one copy of design calculations shall be furnished to the Railroad for review and approval. A minimum 30 days should be allowed for the Railroad's review after all drawings and supporting material are received. No falsework construction will be allowed until the plans and calculations are reviewed and approved by the Office of Chief Engineer. Plans and calculations covering all falsework adjacent to Railroad's operating tracks shall be certified to be complete and satisfactory to the submitting public agency prior to being submitted to the Railroad.

The falsework drawings shall include a superstructure concrete placing sequence and construction joint locations. When a schedule of placing concrete is shown on the contract plans, no deviation will be permitted without the approval of design engineer.

When footing type foundations are to be used, the Contractor shall determine the bearing value of the soil and shall show the values assumed in the design of the falsework on the falsework drawings.

Anticipated total settlement of the falsework and forms

shall be shown on the falsework drawings.

Falsework footings shall be designed to carry the load imposed upon them without exceeding the estimated soil bearing values and anticipated settlement.

The support systems for form panels supporting concrete deck slabs and overhangs on girder bridges shall also be considered to be falsework and designed as such.

Temporary bracing shall be provided, as necessary, to withstand all imposed loads during erection, construction and removal of any falsework, to a point 14 feet from the centerline of any railroad track. The falsework drawings shall show provisions for such temporary bracing or methods to be used to conform to this requirement during each phase of erection and removal. Wind loads shall be included in the design of such bracing or methods.

## III. DESIGN LOADS:

The design load for falsework shall consist of the sum of dead and live vertical loads, and the assumed horizontal load. The minimum total design load for any falsework shall be not less than 100 pounds per square foot for the combined live and dead load regardless of slab thickness.

Dead load shall include the weight of concrete, reinforcing steel, forms and falsework. The weight of concrete, reinforcing steel and forms shall be assumed to be not less than 160 pounds per cubic foot for normal concrete.

Live loads shall consist of the actual weight of any equipment to be supported by the falsework, applied as concentrated loads at the points of contact and a uniform load of not less than 20 pounds per square foot applied over the area supported, plus 75 pounds per linear foot applied at the outside edge of deck overhangs.

The assumed horizontal load to be resisted by the falsework bracing system shall be the sum of the actual horizontal loads due to equipment, construction sequence or other causes and an allowance for wind, but in no case shall the assumed horizontal load to be resisted in any direction be less than 2 percent of the total dead load. The falsework shall be designed so that it will have sufficient rigidity to resist the assumed horizontal load without considering the weight of the concrete.

The minimum horizontal load to be allowed for wind on each heavy-duty steel shore having a vertical load carrying capacity exceeding 30 kips per leg shall be the sum of the

products of the wind impact area, shape factor, and the applicable wind pressure value for each height zone. The wind impact area is the total projected area of all the elements in the tower face normal to the applied wind. The shape factor for heavy-duty shoring shall be taken as 2.2. Wind pressure values shall be determined from the following table:

| Height Zone (Feet above ground) | WIND PRESSURE VALUE | |
|---|---|---|
| | Shores Adjacent to Traffic Openings | At Other Locations |
| 0 to 30 | 20 psf | 15 psf |
| 30 to 50 | 25 psf | 20 psf |
| 50 to 100 | 30 psf | 25 psf |
| Over 100 | 35 psf | 30 psf |

The minimum horizontal load to be allowed for wind for on all other types of falsework, including falsework supported on heavy-duty shoring, shall be the sum of the products of the wind impact area and the applicable wind pressure value for each height zone. The wind impact area is the gross projected area of the falsework and any unrestrained portion of the permanent structure, excluding the areas between falsework posts or towers where diagonal bracing is not used. Wind pressure values shall be determined from the following table:

| Height Zone (Feet above ground) | WIND PRESSURE VALUE | |
|---|---|---|
| | Shores Adjacent to Traffic Openings | At Other Locations |
| 0 to 30 | 2.0 Q psf | 1.5 Q psf |
| 30 to 50 | 2.5 Q psf | 2.0 Q psf |
| 50 to 100 | 3.0 Q psf | 2.5 Q psf |
| Over 100 | 3.5 Q psf | 3.0 Q psf |

The value of Q in the above tabulation shall be determined as follows:

$Q = 1 + 0.2W$; but shall not be more than 10

In the preceding formula, W is the width of the falsework

system in feet, measured in the direction of the wind force being considered.

The entire superstructure cross-section, except railing, shall be considered to be placed at one time. If the concrete is to be prestressed, the falsework shall be designed to support any increased or readjusted loads caused by the prestressing forces.

## IV. DESIGN STRESSES, LOADINGS, AND DEFLECTIONS:

The maximum allowable design stresses and loadings listed are based on the use of undamaged, high-quality materials and such stresses and loadings shall be reduced by the Contractor if lesser quality materials are to be used.

The maximum allowable stresses, loadings and deflections used in the design of the falsework shall be as follows:

### 1. TIMBER:

Compression perpendicular to the grain.....450 psi

Compression parallel to the grain.....480,000 ÷ $(L/d)^2$ psi, but not to exceed 1,600 psi.

Flexural stress.....1,800 psi reduced to 1,500 psi for members with a nominal depth of 8 inches or less.

Horizontal shear.....140 psi

Axial tension.....1,200 psi

Deflection due to the weight of concrete only .....1/240 of the span irrespective of the fact that the deflection may be compensated for by camber strips.

In the foregoing formulas, L is the unsupported length, d is the least dimension of a square or rectangular column, or the width of a square of equivalent cross-sectional area for round columns.

The maximum modulus of elasticity (E) for timber shall be $1.6 \times 10^6$ psi.

Timber piles, maximum loading.....45 tons

Timber connections shall be designed in accordance with the stress and loads allowed in the National Design Specification of Wood Construction, as published by the National Forest Products Association except that (1)

reductions in allowable loads required therein for high moisture condition of the lumber and service conditions shall not apply, and (2) the design value of bolts in two member connections (single shear) when used for falsework bracing shall be 0.75 of the tabulated design value.

**2. STEEL:**

For identified grades of steel, design stresses, except stresses due to flexural compression, shall not exceed those specified in the Manual of Steel Construction as published by the AISC.

When the grade of steel cannot be positively identified, design stresses, except stresses due to flexural compression, shall not exceed either those specified in said AISC Manual for ASTM Designation: A-36 steel or the following:

Tension, axial and flexural.....22,000 psi

Compression, axial..... $16,000 - 0.38(L/r)^2$ psi except L/r shall not exceed 120.

Shear on gross section of web .....14,500 psi

Web crippling for rolled shapes.....27,000 psi

For all grades of steel, design stresses and deflections shall not exceed the following:

Compression, flexural.....(12,000,000) ÷ (Ld/bt) psi, but not to exceed 22,000 psi for unidentified steel or steel conforming to ASTM Designation: A 36 nor $0.6F_y$ for other identified steel.

Deflection due to the weight of concrete only.....1/240 of span irrespective of the fact that the deflection may be compensated for by camber strips.

In the foregoing formulas, L is the unsupported length; d is the least dimension of rectangular columns, or the width of a square of equivalent cross-sectional area for round columns, or the depth of beams; b is the width and t is the thickness of the compression flange; and r is the radius of gyration of the member. All dimensions are expressed in inches. $F_y$ is specified minimum yield stress, psi, for the grade of steel used.

The modulus of elasticity (E) used for steel shall be $30x10^6$ psi.

3. **MANUFACTURED ASSEMBLIES:**

The maximum loadings and deflections used on jacks, brackets, columns, joists and other manufactured devices shall not exceed the manufacturer's recommendations except that the dead load deflection of such joists used at locations other than under deck slabs between girders shall not exceed 1/240 of their spans. If requested by the Engineer, the Contractor shall furnish engineering data from the manufacturer verifying the manufacturer's recommendations or shall perform tests as necessary to demonstrate the adequacy of any such device proposed for use.

## V. SPECIAL CONDITIONS:

In addition to the minimum requirements specified in Section II, falsework over or adjacent to Railroad tracks which are open to traffic shall be designed and constructed so that the falsework will be stable if subjected to impact by vehicles. Falsework posts which support members that cross over railroad shall be considered as adjacent to railroads. Other falsework posts shall be considered as adjacent to railroads only if they are located in the row of falsework posts within a distance which is less than the total height of the falsework and forms from the centerline of the track. The Contractor shall provide any additional features for the work needed to insure the falsework will be stable if subjected to impact by vehicles. The falsework design shall include but not limited to the following minimum provisions:

The vertical load used for design of falsework posts and towers, but not footings, which support the portion of the falsework over openings, shall be the greater of the following:

(1) 150 percent of the design load calculated in accordance with he provisions for the design load previously specified but not including any increased or readjusted loads caused by the prestressing forces, or
(2) the increased or readjusted loads caused by the prestressing forces.

Falsework posts adjacent to railroads shall consist of either steel with a minimum section modulus about each axis of 9.5 inches cubed or sound timbers with a minimum section modulus about each axis of 250 inches cubed.

Each falsework post adjacent to railroad shall be mechanically connected to its supporting footing at its base, or otherwise laterally restrained, so as to withstand

a force of not less than 2,000 pounds applied at the base of the post in any direction except toward the railroad track. Such posts also shall be mechanically connected to the falsework cap or stringer. Such mechanical connection shall be capable of resisting a load in any horizontal direction of not less than 1,000 pounds.

For falsework spans over Railroad, all stringers shall be mechanically connected to falsework cap or framing. Such mechanical connections shall be capable of resisting a load in any direction, including uplift on the stringer, of not less than 500 pounds.

When timber members are used to brace falsework bents which are located adjacent to Railroad, all connections for such timber bracing shall be bolted type using 5/8 inch diameter or larger bolt

Falsework bents in HEAVY TRAFFIC MAIN LINES with freight and passenger service shall have a minimum horizontal clearance of 14'-0" from centerline of track. Temporary collision posts set in 6 feet of concrete and extending not less than 16 feet above top of rail shall be installed on both sides of the bent and located 10 feet clear of the centerline of track with web parallel to centerline of track and approximately 100 feet in advance of falsework. Falsework to be sheathed solid on the side adjacent to track between 3 and 17 feet above top of rail elevation. Sheathing shall consist of plywood not less than 5/8 inch thick or lumber not less than one inch thick (nominal). Bracing on such bents shall be adequate so that the bent will resist the required assumed horizontal load or 5,000 pounds whichever is greater. Collision posts and sheathing shall not be required if horizontal clearances to falsework is 18 feet or greater.

Falsework bents in LIGHT TRAFFIC LINES, DRILL, AND YARD TRACKS with or without passenger service shall have a minimum horizontal clearance of 10'-0" from centerline of track. All other criteria shall be same as heavy traffic lines above except that collision posts and sheathing shall not be required if the horizontal clearance is 14 feet or greater.

A minimum vertical clearance of 21'-6" above top of higher rail shall be maintained at all times.

Any proposed temporary clearances less than those above must be submitted to the Railroad for review and approval prior to construction, and also must be authorized by the utility regulatory agency of the state if less than clearances legally prescribed.

## VI. FALSEWORK CONSTRUCTION:

The falsework shall be constructed to substantially conform to the falsework drawings. The materials used in the falsework construction shall be of quality necessary to sustain the stress required by the falsework design. The workmanship used in falsework construction shall be of such quality that the falsework will support the loads imposed on it without excessive settlement or take-up beyond that shown on the falsework drawings.

Falsework shall be founded on solid footing safe against undermining, protected from softening, and capable of supporting the loads imposed on it. When requested by the Engineer, the Contractor shall demonstrate by suitable load tests that the soil bearing values assumed for the design of the falsework do not exceed the supporting capacity of the soil.

When falsework is to be supported on piles, the piles shall be driven to the bearing value equal to the total calculated pile loading as shown on the falsework drawings.

For falsework over or adjacent Railroad tracks, all details of the falsework system which contribute to the horizontal stability and resistance to impact, except for bolts in bracing, shall be installed at the time each element of the falsework is erected and shall remain in place until the falsework is removed.

Camber strips shall be used where directed by the Engineer to compensate for falsework deflection, vertical alignment and anticipated structure deflection.

Contractor shall provide tell-tales attached to the soffit forms and readable from the ground in enough systematically placed locations to determine the total settlement of the entire portion of the structure where concrete is being placed.

## VII. REMOVING FALSEWORK:

Falsework supporting any span of a simple span bridge shall not be released before 10 days after the last concrete, excluding concrete above the bridge deck, has been placed in that span and in the adjacent portions of each adjoining span of a length equal to at least 1/2 the length of the span where falsework is to be released.

Falsework for cast-in-place prestressed portions of structures shall not be released until after the prestressing steel has been tensioned.

Falsework supporting any span of a continuous or rigid frame bridge shall not be removed until all required prestressing has been completed in that span and in the adjacent portions of each adjoining span for a length equal to at least 1/2 the length of the span where falsework is to be released.

Falsework supporting overhangs, deck slabs between girders and girder stems which slope 45 degrees or more off vertical shall not be released before 7 days after the deck concrete has been placed.

In addition to the above requirements, no falsework for bridge spans shall be released until the supported concrete has attained a compressive strength of 2,600 pounds per square inch or 80 percent of the specified strength, whichever is higher.

When falsework piling are used to support falsework within the limits of the railroad right-of-way such piling within this area shall be removed to at least 2 feet below the finished grades.

All debris and refuse resulting from the work shall be removed and the premises left in a neat and presentable condition.

SOUTHERN PACIFIC LINES
OFFICE OF CHIEF ENGINEER
ONE MARKET PLAZA ROOM 1001
SAN FRANCISCO, CA 94105
c:\wpwin\spflswrk.doc
January 17, 1995

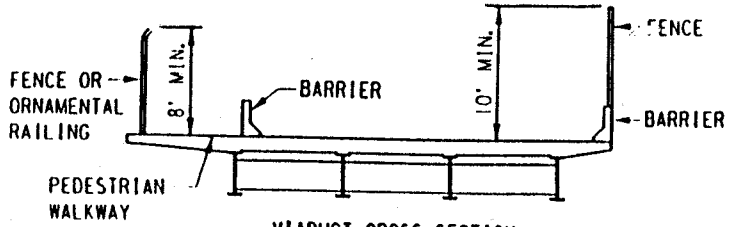


VIADUCT CROSS SECTION
NO SNOW REMOVAL AREAS

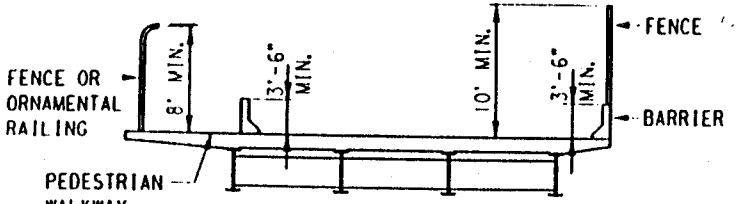


VIADUCT CROSS SECTION
WITH 3'-6" SOLID BARRIER AND FENCE
FOR SNOW REMOVAL AREAS

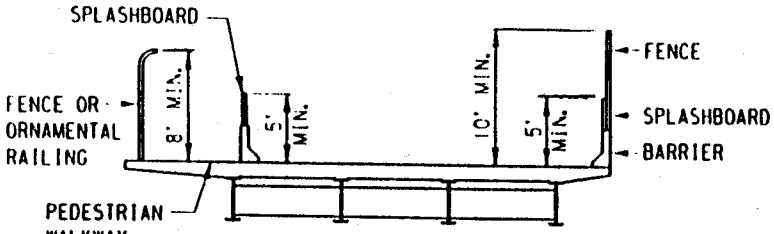


VIADUCT CROSS SECTION
WITH SPLASH BOARD AND FENCE
FOR SNOW REMOVAL AREAS

## GENERAL

Fence shall be provided as indicated on the cross sections and elevation view on both sides of the viaduct in ALL new or modified structures.

Splashboards or solid 3'-6" high barrier rail shall be provided as indicated on the cross sections and elevation view on both sides of the viaduct in ALL new or modified structures where snow removal is being performed.

Lights are to be installed on the underside of the viaduct where shadows cast by the structure would interfere with Railroad operations.

Slope paving shall be provided where end slopes exceed 2 horizontal to 1 vertical.

Falsework for costruction of overhead structures shall comply to UPRR guidelines.

Demolition of existing overhead structures shall comply to UPRR guidlines.

Temporary shoring shall be designed in accordance with UPRR's Shoring Requirements (Drawing No. 106613) and UPRR guidlines.

Applicant shall be responsible for identification, location, and protection of existing utilities.

Contact UPRR's "Call Before You Dig" at least 48 hours prior to commencing work at 1-800-336-9193 to determine location of fiber optics.

Exceptions to these standards must be approved by UPRR's Chief Engineer Design.

## CLEARANCES

Minimum vertical clearance shall be 23 feet above the plane of top-of-rails. Additional clearance may be required for construction purposes or if sag of vertical curve must be adjusted or if future track raise for flood considerations or maintenance is probable.

Minimum horizontal clearances, measured at right angle from centerline of track, shall be as shown in elevation view.

Minimum construction clearances shall be 21 feet vertical above the plane of top-of-rails and 12 feet horizontal at right angle from centerline of track.

## FUTURE TRACKS

Space is to be provided for one or more future tracks as required for long range planning or other operating requirements. Where provision is made for more than two tracks, space is to be provided for access road on both sides of tracks.

## PIERS

Pier protection (crash walls) shall be provided in accordance with AREA Chapter 8, Part 2.1.5 for piers within 25 feet of the centerline of track.

Top of footings within 25' from centerline of track shall be a minimum of 6 feet below base of rail and a minimum of 1 foot below flow line of ditch.

## DRAINAGE

Drainage from the overpass shall be diverted away from UPRR's tracks and not discharged onto the tracks or roadbed.

A standard "V"-shaped or flat-bottom ditch shall be provided on each side of the tracks as necessary.

Culverts may be installed on opposite side of column from track in lieu of standard Railroad ditches when approved by Chief Engineer Design. Maintenance of culverts is to be at applicant's expense.

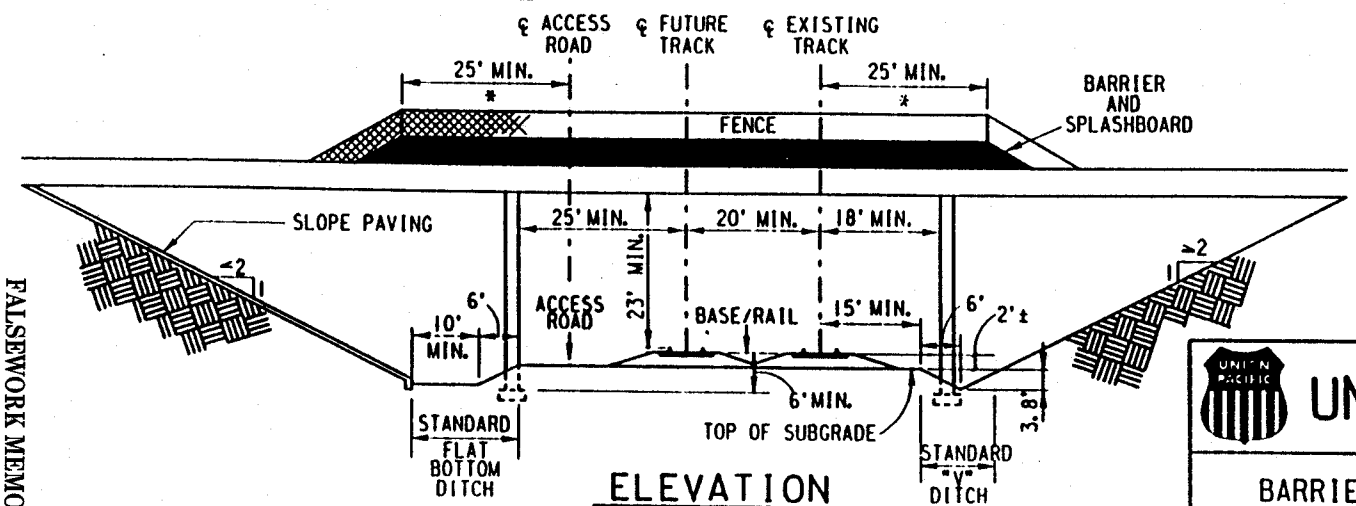


ELEVATION
PERPENDICULAR TO TRACKS

* Fences, splashboards, or solid barriers if required shall extend 25ft. beyond centerline of outer most track or access roadway.

UNION PACIFIC RAILROAD

BARRIERS AND CLEARANCES TO BE PROVIDED AT HIGHWAY, STREET, AND PEDESTRIAN OVERPASSES

OFFICE OF CHIEF ENGINEER DESIGN

REVISED: MAR. 31. 1998 STD DWG 0035

FALSEWORK MEMO No. 7
ATTACHMENT No. 2 (09/99)
Sheet 1 of 1

## SPLICING OF FALSEWORK POSTS

Timber falsework posts may be spliced. The guidelines contained herein shall be used to analyze properly located post splices.

Splice plates shall be assumed to act in pairs, one on either side of the post. Plates are required on all sides of the post since horizontal loadings can act in any direction. Minimum length of splice plates shall be 4 times the maximum post width (48 inches for 12" x 12" posts) and the splice plates shall be centered. The minimum thickness of splice plates for 12" x 12" posts shall be 2 inch nominal lumber.

Splices shall only be located on posts between upper and lower ends of the members making up-an X-brace. Post splicing shall not be located where it can be assumed that moment will be induced into the post or splice plates, as at upper and lower post ends beyond bracing limits, or between pairs of X-braces, as indicated by the * in the figure to the right.

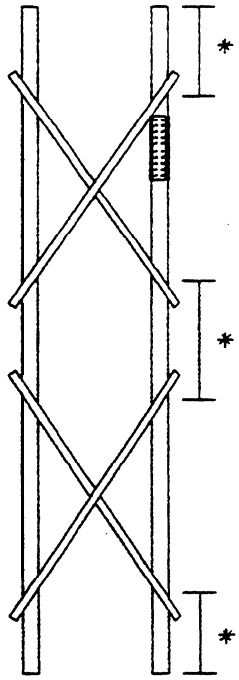


Longitudinal bracing will often have a different configuration than the transverse bracing. Use the longest unbraced length.

The figure to the right assumes transverse bracing with no longitudinal bracing, or with longitudinal brace connections matching the uppermost and lowermost transverse brace connections. Post splices, for posts braced both transversely and longitudinally, must be located within the post length between points of restraint (or brace connection locations) of both transverse and longitudinal pairs of X-brace connections.

Metal banding (strapping) offers no apparent structural restraint and may not be used as a substitute for nails.

The following criteria is to be used for analyzing splices:

1 . Determine the post loading. The vertical post load will be the sum of all dead (excluding post weight) and live loads. If the post is to support falsework

over traffic the load used shall be the greater of the following:

(1) 150 Percent of the design load, or

(2) The increased or readjusted loads caused by the prestressing forces.

2. Determine the longest unsupported, or unbraced length, of post between points of restraint considering both transverse and longitudinal directions.

3. Verify that the post is not overstressed for the longest unbraced length condition.

4. Determine the smallest theoretical post which will meet the design vertical load for the longest unsupported length. This theoretical post will be smaller than the actual post, but will still have to meet the stress requirements outlined in 3 above.

5. Determine the section modulus required for the splice plates based on the smallest theoretical post size, but which are to be installed on the actual post.

6. Apply a fictitious load equivalent to 0.75% of the total vertical post load normal to the axis of the post and splice plates for a splice hypothetically located midway between the most widely spaced points of restraint.

7. Evaluate horizontal shear using only the side plates.

8. Determine the number of nails required. The number of nails required is determined from the force induced in the cover plates from the fictitious loading. Verify a minimum of 11 diameters penetration in the post or use reduced values for lesser penetration. Load duration factors for splice plates shall not exceed 1.0.

   Physical testing at the Transportation Laboratory has indicated that nail resistance equal to twice the normal permitted value for lateral loading-may be used for splice plate connections.

An example problem demonstrating the analysis of square post splicing follows:

EXAMPLE PROBLEM:

This example problem consists of 2 parts, the purpose of which is to demonstrate the analysis of two separate posts which are to be spliced.

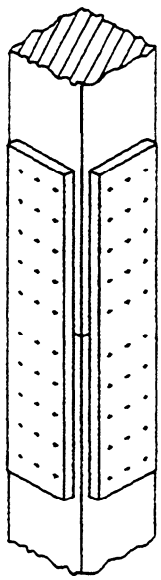

Posts: 12" x 12": Unsupported 12 feet transversely and 20 feet longitudinally.

Splice located near mid-height of single X-braced post.

Splice plates: 2" x l0" x 4'-0" each side of post with 15 - 16d duplex nails in each half of the splice.

Good workmanship with full bearing and with no built in eccentricity is required.'

PART l. Post No. 1: Load = 55,000 Lbs. Post is adjacent to, and supporting falsework over traffic.

PART 2. Post No. 2: Load = 92,500 Lbs. Post not adjacent to, nor supporting falsework over traffic.

PART 1. Analysis of Post No. 1

1 . Determine load on post adjacent to traffic:

Load = 150%(55,000) = 82,500 Lbs

Determine section modulus of post and compare to required:

$$S = \frac{bd^2}{6} = \frac{(12)(12)^2}{6} = 288 > 250 \text{ in}^3 \qquad \text{OK}$$

2 . Longest distance between laterally restrained points equals 20 feet in the longitudinal direction. Use longest unbraced length = 20 feet.

3. Verify that the post is not overstressed for the longest unbraced length.

Determine the allowable stress based on unbraced length:

$$\frac{480,000}{\left(\frac{L}{d}\right)^2} = \frac{480,000}{\left[\frac{20(12)}{12}\right]^2} = 1,200 < 1,600 \text{ psi}$$

Determine stress in post due to vertical load:

$$\frac{82,500 \text{ Lbs}}{144 \text{ In}^2} = 573 < 1,200 \text{ psi}$$

4. Determine the minimum post dimensions required by the maximum post loading. The minimum post dimensions will be those of a square post which is capable of carrying the applied vertical load. This may be determined by equating $f_c$ to $F_c$:

$f_C = F_C$

P = (55,000)(1.5) = 82,500 Lbs; L = (20) (12) = 240 inches

$$\frac{P}{A} = \frac{480,000}{\left(\frac{L}{d}\right)^2} \quad \text{where } A = d^2$$

$$\frac{P}{d^2} = \frac{480,000d^2}{L^2}$$

$$d = \left[\frac{PL^2}{480,000}\right]^{1/4} = \left[\frac{(82,500)(240)^2}{480,000}\right]^{1/4} = 9.97 \text{ inches}$$

5 . Compare minimum post section modulus to section modulus developed by splice plates.

Minimum post section modulus (S):

$$S = \frac{bd^2}{6} = \frac{d^3}{6} = \frac{(9.97)^3}{6} = 165 \text{ in}^3$$

Check against section modulus of planned splice plates.

Calculate splice plate section modulus for plates installed on a full dimensional post.

Splice plate section modulus:

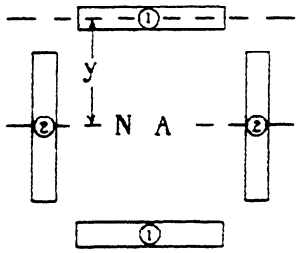


| 2 x 10 Plates | A | y | $Ay^2$ | $I_o$ | I |
|---|---|---|---|---|---|
| 1 | 13.875 | 6.75 | 632 | 2.6 | 635 |
| 1 | 13.875 | 6.75 | 632 | 2.6 | 635 |
| 2 | 13.875 | 0 | 0 | 98.9 | 99 |
| 2 | 13.875 | 0 | 0 | 98.9 | 99 |
| | | | | | 1,468 $in^4$ |

$$S = \frac{1{,}468\ in^4}{7.5\ in} = 195.7\ in^3 > 165\ in^3$$

A section modulus of 250 $in^3$ is the minimum post section modulus required for a post adjacent to traffic. This splice is not acceptable for use on a post adjacent to traffic since the net section modulus of the splice plates (195.7 $in^3$) is less than the 250 $in^3$ minimum wood section modulus specified in Section 51-l.06A(3), Special Locations, of the Standard Specifications.

The proposed splice for Post No. 1 as submitted cannot be used for the p&pose intended.

PART 2. Analysis of Post No.2

Post No. 2 will be analyzed for a load of 92,500 pounds. This post is not adjacent to, nor is it supporting falsework over traffic; therefore, no section modulus requirements are specified for an unspliced post at this location. However, the splice plates will need to develop the theoretical minimum post section modulus.

1 . Post loading not adjacent to traffic condition = 92,500 LbS.

2 . Longest distance between lateral restraint points = 20 feet.

3 . Determine the allowable stress based on unbraced length:

$$\frac{480{,}000}{\left(\frac{L}{d}\right)^2} = \frac{480{,}000}{\left[\frac{20(12)}{12}\right]^2} = 1{,}200 < 1{,}600\ psi$$

Determine stress in-post due to vertical load:

$$\frac{92{,}500\ Lbs}{144\ In^2} = 642 < 1{,}200\ psi$$

4. Determine the minimum post dimensions required by the maximum post loading. The minimum post dimensions will be those of a square post which is capable of carrying the applied vertical load. This may be determined by equating $f_c$ to $F_c$:

$$f_c = F_c$$

$$P = 92{,}500 \text{ Lbs}; \quad L = (20)(12) = 240 \text{ inches}$$

$$\frac{P}{A} = \frac{480{,}000}{\left(\frac{L}{d}\right)^2} \quad \text{where } A = d^2 \quad \therefore \frac{P}{d^2} = \frac{480{,}000d^2}{L^2}$$

$$d = \left[\frac{PL^2}{480{,}000}\right]^{1/4} = \left[\frac{(92{,}500)(240)^2}{480{,}000}\right]^{1/4} = 10.26 \text{ inches}$$

5 . Compare minimum post section modulus to section modulus developed by splice plates.

Minimum post section modulus (S):

$$S = \frac{bd^2}{6} = \frac{d^3}{6} = \frac{(10.26)^3}{6} = 180 \text{ in}^3$$

Check against section modulus of planned splice plates.

The section modulus of the splice plates is the same as determined for the post in Part 1: 195.7 $in^3$ > 180 $in^3$. The section modulus of the splice is satisfactory for this post loading at this location.

6 . Apply a fictitious lateral load (P') equivalent to 0.75% of the post loading (P) normal to the post-axis at the post splice location hypothetically centered between restraint points).

Lateral load: P' = 0.75%(92,500) = 694 Lbs.

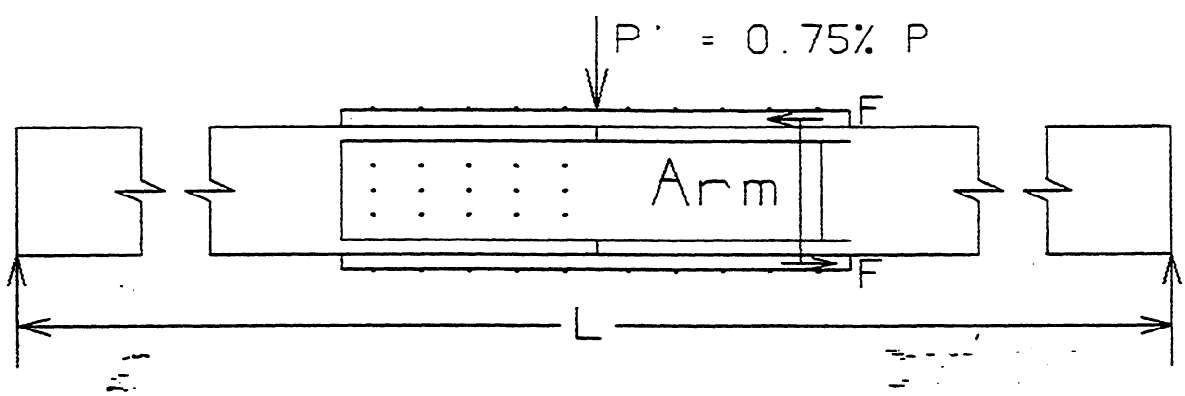

From the rotated post depicted in the previous figure, the top and bottom splice plates will be referred to as 'cover plates', with the other two splice plates referred to as 'side plates'.

3. Evaluate the side plates for shear. Only the side plates are to be considered for shear resistance.

$$\textbf{Shear} = P'/2 = 694/2 = 347 \text{ Lbs.}$$

Horizontal Shear:

$$v = \frac{3V}{2A} = \frac{3(347 \text{ Lbs})}{2(2 \text{ plates})(13.875 \text{ in}^2/\text{plate})} = 19 < 140 \text{ psi} \quad \text{OK}$$

8 . Determine number of nails required.

The required number of nails in each half of a splice plate is to be determined in the following manner:

a. Determine end reactions (V) of a beam equivalent to the longest unrestrained length (L) loaded centrally with a fictitious concentrated load (P') equal to the applied lateral load. This assumes the splice is located centrally between the largest spaced points of lateral restraint (longest unbraced length).

$$V = P'/2$$

b. Determine the moment at the center of the splice.

$$M = V(L/2) = P'/2(L/2) = P'L/4$$

c. Determine length of a resisting moment couple arm of forces (F) between the centers of thickness of the cover plates. Arm = post width + 2(1/2)t of the splice plates. For a 12" x 12" post with 2" cover plates:

$$\text{Arm} = 12 + 2(1/2)1.5 \text{ Inches.}$$

d. Determine F by dividing the moment determined in part b above by the couple moment arm determined in part c above.

$$F = (P'L/4)/\text{Arm}$$

e. Determine the lateral load resistance value of one nail in a cover plate. This value may be doubled for splice plate usage.

f. Number of nails required then equals the force (F) divided by the value of one nail for lateral loading.

No. of Nails = F/Nail Value (round up)

a. Reaction V = 694/2 = 347 Lbs.

b. Moment M = 694(20)/4 = 3,470 Ft-Lbs.

c. Arm = 12 + 2(1/2)1.5 = 13.5 Inches.

d. Force F = M/Arm = 3,470(12 In/Ft)/l3.5

= 3,084.4 Lbs.

e. NDS Nail value is doubled:

Desired penetration of 16d nail = 11d = 1.78 In.

Actual penetration of 16d = 3.125 - 1.5 = 1.625 In.

Nail value must be prorated.

Nail value for full 11d penetration = 108 Lbs.

Nail value for min. of 0.59 Inches = 36 Lbs.

Prorated nail value:

$$\text{Nail value} = 2\left[36 + \frac{1.625 - 0.59}{1.78 - 0.59}(108 - 36)\right]$$

$$= 2[36 + (0.8697)(72)]$$

$$= 2(98.62)$$

$$= 197 \text{ Lbs/nail}$$

f. Number of 16d nails required:

$$\text{Nails required} = \frac{3{,}084.4 \text{ Lbs}}{196 \text{ Lbs/Nail}} = 16 > 15$$

The proposed splice is not acceptable since the number of 16d nails provided is less than the number required.

For curious comparison, determine the number of 20d nails that would have been required.

Desired penetration of 20d = 2.11 inches.

Actual penetration = 3.625 - 115 = 2.125" OK

Nail value for 20d nail = 139 Lbs.

$$\textbf{Nails required} = \frac{3084.4 \text{ Lbs}}{2(139 \text{ Lbs/nail})} = 12$$

The design splice plates will be satisfactory for the maximum unbraced length, for the post loading, and for the location of intended use with a total of either 16 or more 16d duplex nails or 12 or more 2Od duplex nails per each half of each splice plate.

It will be necessary to verify that splices will not be located on unbraced portions of posts, as at upper and lower post ends beyond bracing limits, or between pairs of X-braces where moments might occur.

# SHORT POURED-IN-PLACE CONCRETE PILES

# TO RESIST UPLIFT AND LATERAL LOADS

## INTRODUCTION

Occasionally it is necessary to determine the capacity of short poured-in-place concrete piles used to resist uplift and lateral loads. The following is a brief review of the technical aspects and a procedure which can be used for investigating rigid piles. This is not a comprehensive coverage of the subject - there are soil complexities not covered, and some caution should be used in its application if primary loads of extended duration are to be supported.

The pile must have the structural capacity to resist tensile, shear and bending stresses. Reinforcing steel should extend the full length of these piles.

The Office of Geotechnical Engineering of the Division of New Technology, Materials and Research in Sacramento has furnished the Office of Structure Construction criteria for the analysis of loadings on poured-in-place concrete piles. The analysis is dependent on proper selection of soil type. It will be important to determine whether the soil into which the pile is constructed is principally cohesive or cohesionless. Analytical results for pile uplift and lateral loading represent ultimate resistance values.

Load resisting capacity is dependent upon the characteristics of the soil into which the pile has been cast. Preliminary assumptions may be made about soil properties at the time of review of the working drawings. A final determination of the pile's capacity should be made, however, when the pile hole is excavated and the actual soil can be inspected. The type of soil in the upper third of the hole, its degree of compaction and whether ground water is (or may be), encountered are of primary importance.

Pile loadings are considered in three separate categories; Pile Uplift, Lateral Loads, and Resistance to Combined Uplift and Lateral Loads - all with sample problems.

## PILE UPLIFT

Pile uplift, acting either vertically or at an angle is resisted by soil-pile friction (shearing resistance) and the physical weight of the pile.

The shearing resistance of the soil-pile interface is computed differently for cohesive soils than it is for cohesionless soils. The internal angle of friction of the soil is not utilized for poured-in-place piles because in hard ground (high friction angle) the drilling operation loosens the adjacent soil, and in loose ground (low friction angle) the drilling operation tends to compact the adjacent soil particles.

Ultimate pile resistance to uplift is determined by adding the weight of the pile to the quantity of the appropriate unit shearing resistance value multiplied by the surface area of the pile. No additional provisions are made for irregularities along the pile-soil interface.

**Resistance to pile uplift = $\pi dzS$ + pile weight**

where:
- d = Pile diameter
- z = Depth below ground surface
- S = Unit shearing resistance on the soil-pile interface, psf

Generally, working load values are to be limited to no more than one-half the ultimate load values, which should provide a minimum safety factor of 2.

Pages C-9-2 through C-9-3 illustrate pile uplift in cohesionless type soils and pages C-9-4 through C-9-5 illustrate pile uplift in cohesive soils.

### PILE UPLIFT IN-COHESIONLESS SOIL

For cohesionless soil, the soil-pile friction (shearing resistance) may be computed using the following equation:

$$S = \beta\sigma_z \text{ psf} \quad \text{but } S \leq 4{,}000 \text{ psf}$$

**where:**
- $\beta$ = $1.5 - 0.315(z)^{1/2}$ but $0.25 \leq \beta \leq 1.2$. A unitless reduction factor for cohesionless soils.
- $\sigma_z$ = The effective overburden soil weight. Below the water table the weight of water is subtracted from the soil unit weight so that only the submerged soil weight is used.

## EXAMPLE PROBLEM, PILE UPLIFT IN COHESIONLESS SOIL

Determine the vertical load capacity of an 18 inch diameter poured-in-place concrete pile 12 feet long embedded vertically 10 feet in the ground. The water table will rise about 4 feet up from the pile tip at the anticipated time of load application. Soil parameters are as follows:

Soil internal friction angle $\phi = 30°$

Unit weight of concrete $\gamma_c = 145$ pcf

Unit weight of soil $\gamma_s = 100$ pcf

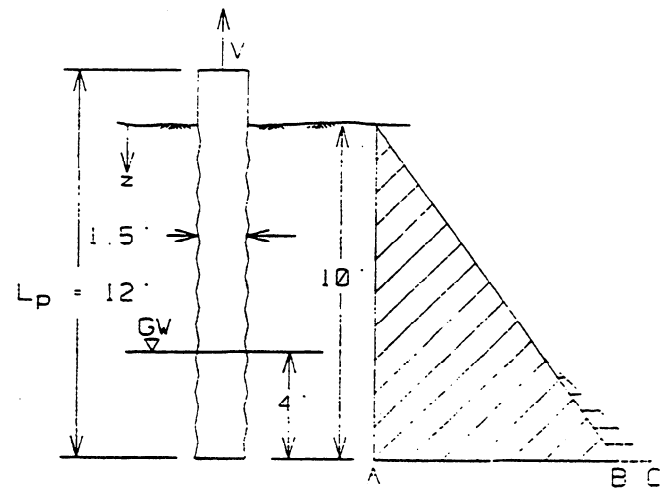


Where:

AB = The pressure due to the weight of the soil.
BC = The pressure due to the weight of the water.
$L_p$ = Length of the pile.
d = Pile diameter = 1.5 feet.

Solution:

Unit shearing resistance:

$$\beta = 1.5 - 0.315(z)^{1/2} = 1.5 - 0.315(10)^{1/2} = 0.5 \quad \text{O.K.}$$

$$z = 10' \qquad \text{but } z_{dry} = 6' \text{ and } z_{submerged} = 4'$$

$$\sigma_z = 6(100) + 4(100 - 62.4) \approx 750 \text{ pcf}$$

$$S = \beta\sigma_z = 0.5(750) = 375 \text{ psf} < 4{,}000 \text{ psf} \quad \text{O.K.}$$

Net pile shearing resistance = (Pile surface area)S
$= \pi dzS = \pi(1.5)(10)(375)$

= 17,671 Lbs

$$\text{Pile weight} = \frac{\pi d^2 L_p \gamma_c}{4} = \frac{\pi(1.5)^2(12)(145)}{4} = 3{,}075 \text{ Lbs}$$

Ultimate load capacity = Net pile shearing resistance + Pile weight
= 17,671 + 3,075 = 20,746 Lbs

$$\text{Working load (V)} = \frac{\text{Ultimate load}}{2} = \frac{(20{,}746)}{2} = 10{,}373 \text{ Lbs}$$

## PILE UPLIFT IN COHESIVE SOIL

The soil-pile friction equations for cohesive soils differ substantially for pile penetrations of less than 5 feet versus piles over 5 feet in depth. The equations also depend on whether the pile is greater or less than 18 inches in diameter.

Shearing resistance = $\pi dzS$

Where $S = \alpha_z C$

$S$ = Unit shearing resistance, but $S \leq 5{,}500$ psf.
$C$ = Soil cohesion (undrained shear strength).
$z$ = Depth below ground surface in feet.
$d$ = Diameter of the pile.
$\alpha_z$ = An empirical unitless reduction factor derived from load testing which accounts for clay shrinkage and lateral pile loadings. This variable depends on the depth of pile penetration, having one value for a depth up to 5 feet, and another for penetration over 5 feet.

Reduction factor $\alpha_z$ for pile diameters (d) greater than 18":

The reduction factor $\alpha_z$ for the first 5 feet of penetration is 0. The reduction factor remains constant at $\alpha_z$ = 0.55 for all depths greater that 5 feet. This may be expressed in equation form as:

1. For short piles, 5' or less embedment:

$$\alpha_{z(0\text{-}5)} = 0 \quad \text{for} \quad 0 \leq z \leq 5 \text{ feet}$$

2 . For pile lengths with 5' or more embedment:

$$\alpha_{z(0\text{-}5)} = 0 \quad \text{for} \quad 0 \leq z \leq 5 \text{ feet}$$

$$\alpha_{z(>5)} = 0.55 \quad \text{for} \quad z > 5 \text{ feet}$$

Reduction factor $\alpha_z$ for pile diameters (d) 18" or less:

The reduction for the top 5' of pile varies from 0 at z = 0' to 0.55 at z = 5', then remains constant at 0.55 for all depths greater than 5'. For lengths of pile between 0 and 5', prorate the reduction factor. This concept may be expressed in equation form as:

1 . For short piles, 5' or less embedment:

$$\alpha_{z(0\text{-}5)} = \left(\frac{0 + 0.55}{2}\right)\frac{z}{5} = (0.275)\frac{z}{5}$$

$$= (0.055)z$$

2. For pile lengths with 5' or more embedment:

$$\alpha_{z(0-5)} = \left(\frac{0 + 0.55}{2}\right)\frac{z}{5} = (0.275)\frac{z}{5}$$

$$= (0.055)z$$

$$\alpha_{z(>5)} = 0.55$$

EXAMPLE PROBLEM. PILE UPLIFT IN COHESIVE SOIL

Determine the vertical load capacity of an 18 inch diameter poured-in-place concrete pile 12 feet long embedded vertically 10 feet in-cohesive soil with an average undrained shear strength value of 910 psf where the concrete unit weight $\gamma_c$ is 145 pcf and the soil unit weight $\gamma_s$ is 110 pcf.

Solution:

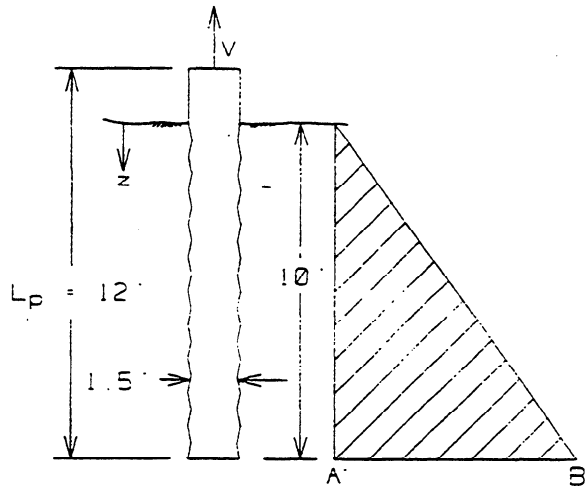


$$\alpha_{z(0-5)} = (0.055)z$$

$$= (0.055)5 = 0.275$$

$$\alpha_{z(>5)} = 0.55$$

$$S_{(0-5)} = \alpha_{z(0-5)}C \text{ psf}$$

$$= 0.275(910) = 250 \text{ psf}$$

$$S_{(>5)} = \alpha_{z(>5)}C$$

$$= 0.55(910) = 500 \text{ psf}$$

Where:

AB = The pressure due to the weight of the soil.
$L_p$ = Length of the pile.
d = pile diameter = 1.5 feet.

$$\text{Net shearing resistance} = \pi d[(5)S_{(0-5)} + (z-5)S]$$

$$= \pi(1.5)[(5)(250) + (10-5)(500)]$$

$$= \pi(1.5)(3750) = 17{,}671 \text{ Lbs}$$

$$\text{Pile weight} = \frac{\pi d^2}{4}L_p\gamma_c = \frac{\pi(1.5)^2}{4}(12)(145) = 3{,}075 \text{ Lbs}$$

Ultimate load capacity = Net pile shearing resistance
+ Pile weight
= 17,671 + 3,075 = 20,746 Lbs

$$\text{Working load (V)} = \frac{\text{Ultimate load}}{2} = \frac{20{,}746}{2} = 10{,}373 \text{ Lbs}$$

## LATERAL LOADS

Tests have shown that soil resistance to lateral pile loading is greater than that predicted by Rankine equations. For clays the ultimate passive resistance can be as large as 9 times the shear strength (C), and for cohesionless soils the ultimate resistance can be 3 times as large as computed Rankine values. The soil resistance acting on isolated piles to a lateral force applied at or near the ground surface may be somewhat depicted as shown in Figure 1.

Convenient concepts and equations have been developed by Broms for cohesive and cohesionless soils. If a few important soil properties are known, or Can be determined, it is possible to compute soil resisting values and pile moments resulting from the application of lateral pile forces at or near the ground surf ace.

Ultimate pile resistance to lateral loading may be determined by failure of the soil along the total pile length in the case of short piles, or by the yield moment of the pile itself for longer piles. Short unrestrained piles are those piles having a length to diameter ratio (L/d) of 20 or less providing the yield moment ($M_y$) of the pile will be greater than the maximum resisting moment **($M_{ULT}$)** furnished by the soil.

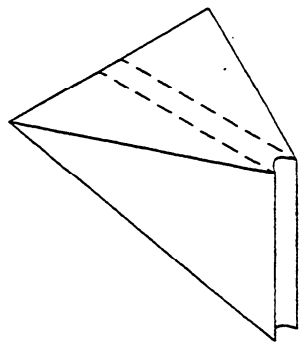

**FIGURE 1**

Embedment of piles should be a minimum of 4 times the pile diameter to achieve sufficient soil resisting capacity. The point of rotation of rigid short piles may be assumed to occur between 0.70 to 0.75 times the embedded length; where the larger value coincides with the largest lateral loadings. Soil resisting values are determined by using the lateral resisting value of up to 3 times the passive coefficient $K_P$ for cohesionless soil and as much as 9 times the undrained shear strength $C_u$ of cohesive soils.

Piles may be considered to act individually provided the pile spacing exceeds 4 pile diameters. When piles are spaced closer than 2 pile diameters, the piles and the soil within the pile group may be considered to act as a single unit.

As piles under load deflect they place the forward soil in a passive condition. When a pile is in clay, a void will be left behind the pulled pile until the clay crumbles or swells. When a pile is in granular material, the soil will soon fill the void behind the pulled pile. When a pile is unloaded, it will generally not return to its original position; some of the pulled deflection will remain. It can readily be seen that unloading and reloading a pile greatly decreases the soils moment capacity for that pile.

Generally, working load values are to be limited to no more than one-half the ultimate load values, which should provide a minimum safety factor of 2 assuming a one time loading of the soil around the pile.

For each subsequent time a pile is to be loaded in the same direction, an additional safety factor of 0.25 is to be added to the previous value as defined by the following:

$$SF = 2 + (X-1)(0.25)$$

where:

SF = Safety factor

x = Number of uses in the same direction for the same horizontal component.

## LATERAL LOADING IN COHESIONLESS SOILS

Considerations used for piles in-cohesionless soil include increasing the Rankine passive resistance by a factor of 3, ignoring active pressures on the back side of the pile, and assuming that soil along the total length of buried pile provides resistance at the moment of loading.

Figure 2 depicts soil pressure diagrams for short and long isolated piles in cohesionless soil. The passive resistance at the toe of the short piles is replaced by a concentrated load acting at the pile tip to simplify the moment equation. A plastic hinge is assumed for long piles and the maximum bending moment will be limited to the yield moment ($M_Y$) of the pile.

The maximum moment for short piles occurs at the location of zero shear. For granularsoils this plane of zero shear is located at a pile depth of $e + f_g$ below the plane of application of the lateral load. The distance $f_g$ equals the length from the ground surface to the plane of zero-shear.

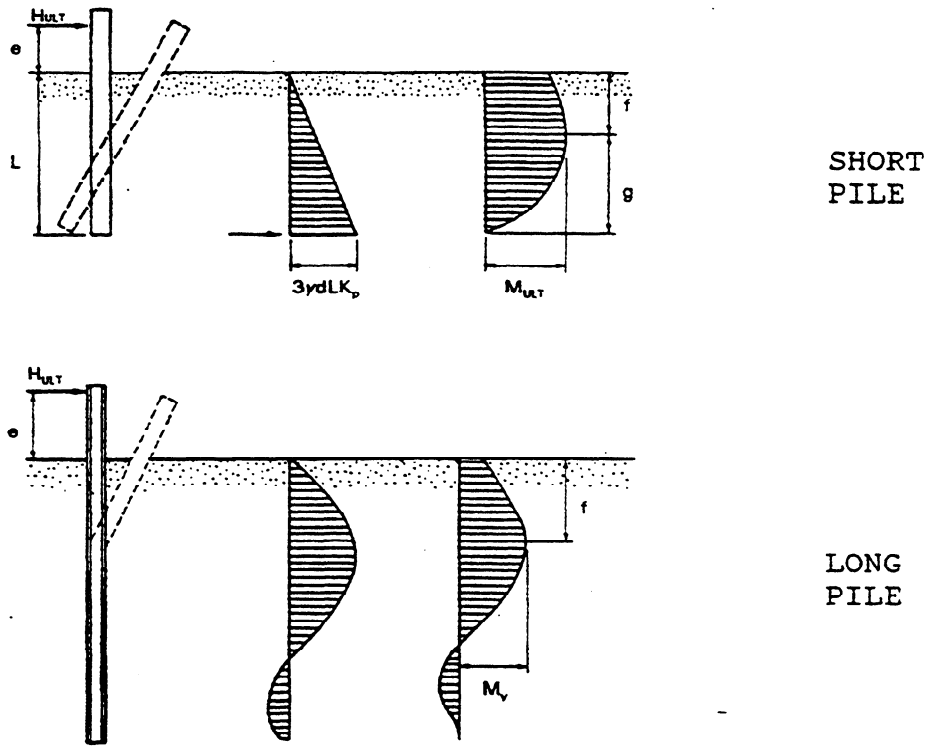


**FIGURE 2**

Equating lateral forces gives:

$$(f_g)^2 = \frac{H_{ULT}}{1.5\gamma_S dK_P}$$

The maximum moment occurs at a depth of e + $f_g$:

$$M_{ULT} = H_{ULT}\left(e + \frac{2f_g}{3}\right)$$

Based on failure of the soil.

If the moment $M_{ULT}$ is calculated to be greater than the pile limiting yield moment $M_Y$ a long pile is indicated and therefore $H_{ULT}$ must be limited by using $M_{ULT} = M_Y$.

Figure 3 contains curves developed by Broms which relate the pile embedment length ratio L/d to the ultimate lateral soil resistance for various e/L ratios. $H_{ULT}$ can be determined for short piles by using Figure 3.

Figure 4 may be used for long piles. Broms' curves for values of e/d relate the soil ultimate lateral resistance to the yield moment of the pile. This figure is used when the pile embedment length ratio L/d is greater than 20 and when the

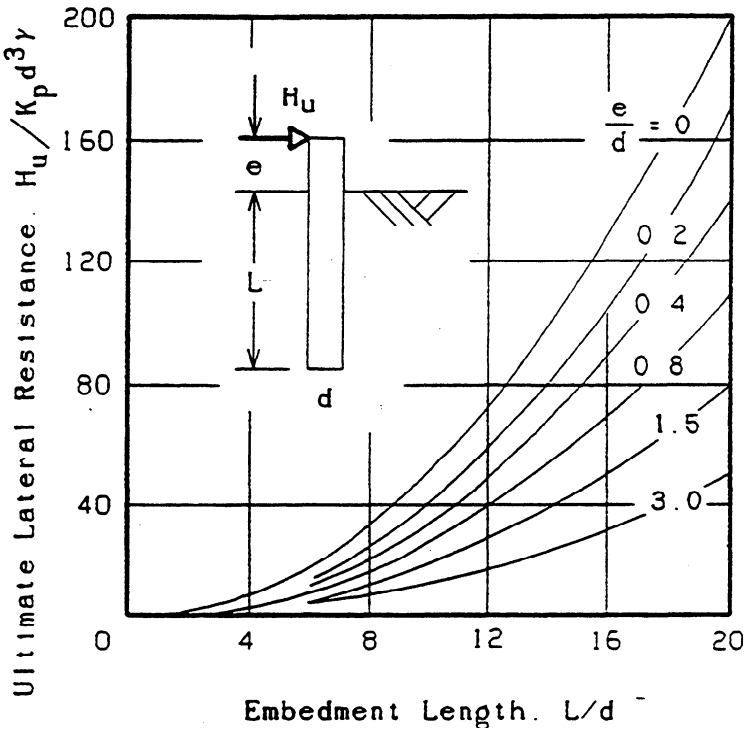


**FIGURE 3**

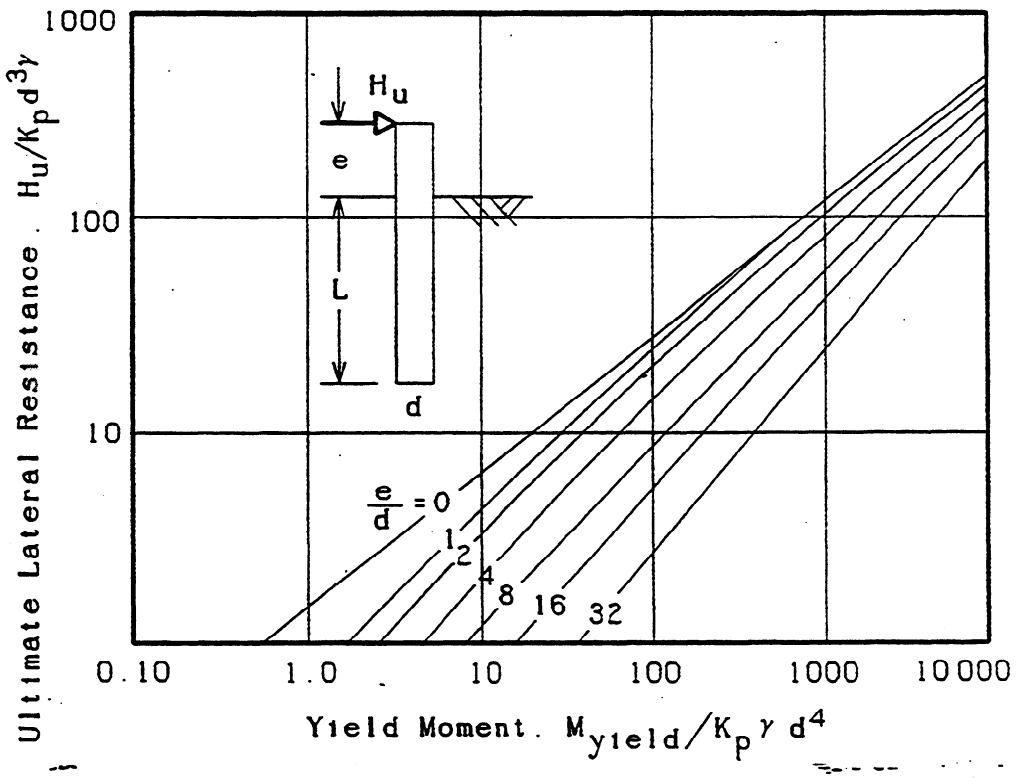


**FIGURE 4**

yield moment of the pile is less than the ultimate lateral soil resistance.

The maximum safe single use working load for free headed piles in cohesionless soils may be taken as one-half of the ultimate load values.

**EXAMPLE PROBLEM, LATERAL LOADING IN COHESIONLESS SOIL**

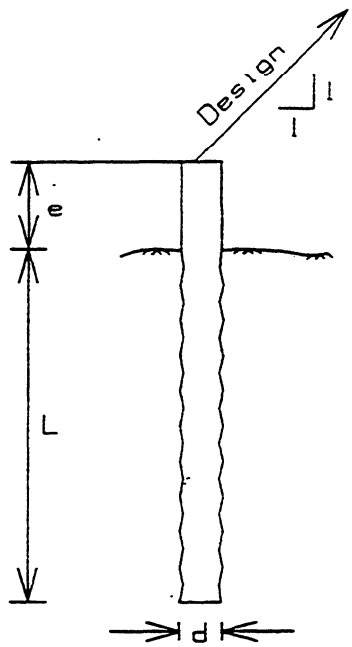


Design = 3,800 Lbs
H = 2,687 Lbs
V = 2,687 Lbs

$\phi = 30°$
$\gamma_s = 110$ pcf
$\gamma_c = 145$ pcf
L = 8'-0"
pile d = 1'-6"
e = 2'-0"

Single use loading

Solution:

$K_p = \tan^2(45° + \frac{\phi}{2})$ = 3.00 (for level ground surface)

L/d = 5.33 e/d = 1.33

From Figure 3:

$$\frac{H_{ULT}}{K_p \gamma d^3} \approx 5 \text{ when } e = 2'\text{-}0''$$

$H_{ULT} = K_p \gamma d^3 (5) = (3.0)(110)(1.5)^3(5) = 5{,}569$ Lbs

Working Load Value for $H = \frac{5{,}569}{2} =$ 2,784 > 2,687 Lbs

**Compute $f_g$ and $M_{ULT}$:**

$$f_g = \left[\frac{H_{ULT}}{1.5\gamma_s d K_p}\right]^{1/2} = \left[\frac{5,569}{1.5(110)(1.5)(3.0)}\right]^{1/2} = 2.74 \text{ feet}$$

$$M_{ULT} = H_{ULT}\left[e + \frac{2f_g}{3}\right] = 5,569\left[2 + \frac{(2)(2.74)}{3}\right] = 21,311 \text{ Ft-Lb}$$

**Working Load Value for M =** $\frac{21,311}{2}$ = 10,656 Ft-Lbs

## LATERAL LOADING IN COHESIVE SOILS

The ultimate soil resistance for piles in cohesive soils increases to some maximum value at approximately 3 pile diameters below the ground surface then remains fairly constant at greater depth. Literature suggests using a soil distribution of zero between ground surface and a depth of 1.5 times the pile diameter (1.5d) and then using a value of 9 times the undrained shear strength **($9C_u$)** for the remainder of the pile depth.

SHORT PILE

LONG PILE

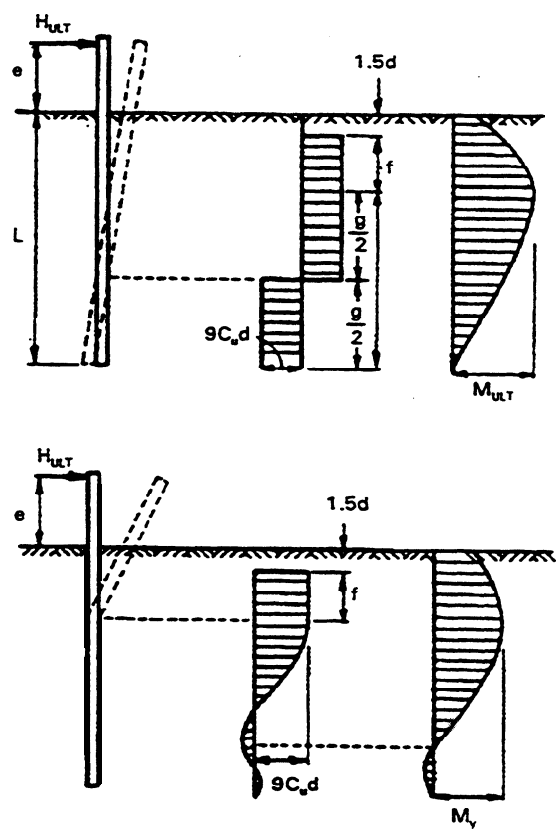


**FIGURE 5**

Figure 5 depicts soil pressure diagrams for short and for long piles in cohesive soils. Short piles have a limiting embedment

length ratio of L/d = 20. Piles having L/d ratios in excess of 20 are considered to be long piles. For long piles a plastic hinge is assumed in the vicinity of the maximum moment. The yield moment $M_Y$ of long piles will generally limit the soil resisting maximum moment $M_{ULT}$ so that $M_{ULT} = M_Y$ should be used.

The maximum moment for short piles occurs at the location of zero shear. For cohesive soils the plane of zero shear is located at a pile depth of e + 1.5d + $f_c$ below the plane of application of the horizontal force. The distance $f_c$ develops from equating horizontal forces:

$$f_c = H_{ULT}/9C_u d$$

**The maximum moment occurs at a depth of e + 1.5d + $f_c$:**

$$M_{ULT} = H_{ULT}(e + 1.5d + 0.5f_c)$$

Based on failure of the soil.

If the moment $M_{ULT}$ is calculated, to be greater than the yield moment $M_Y$ of the pile, a long pile is indicated and $H_{ULT}$ must be limited by using $M_{ULT} = M_Y$.

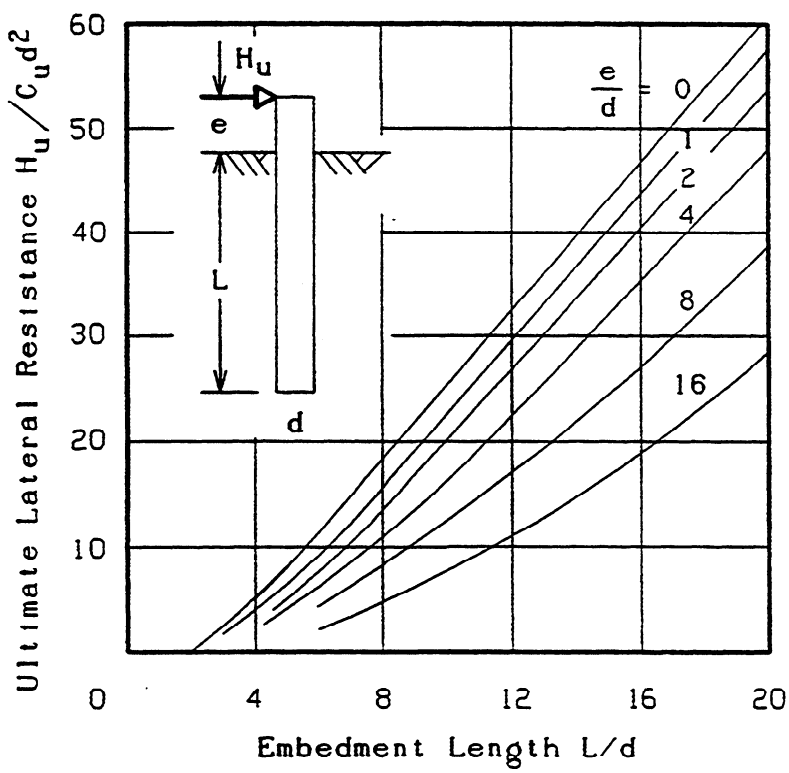


**FIGURE 6**

Figure 6 contains curves developed by Broms for short piles which relates the pile embedment depth ratio L/d to the ultimate lateral soil resistance for various e/d ratios.

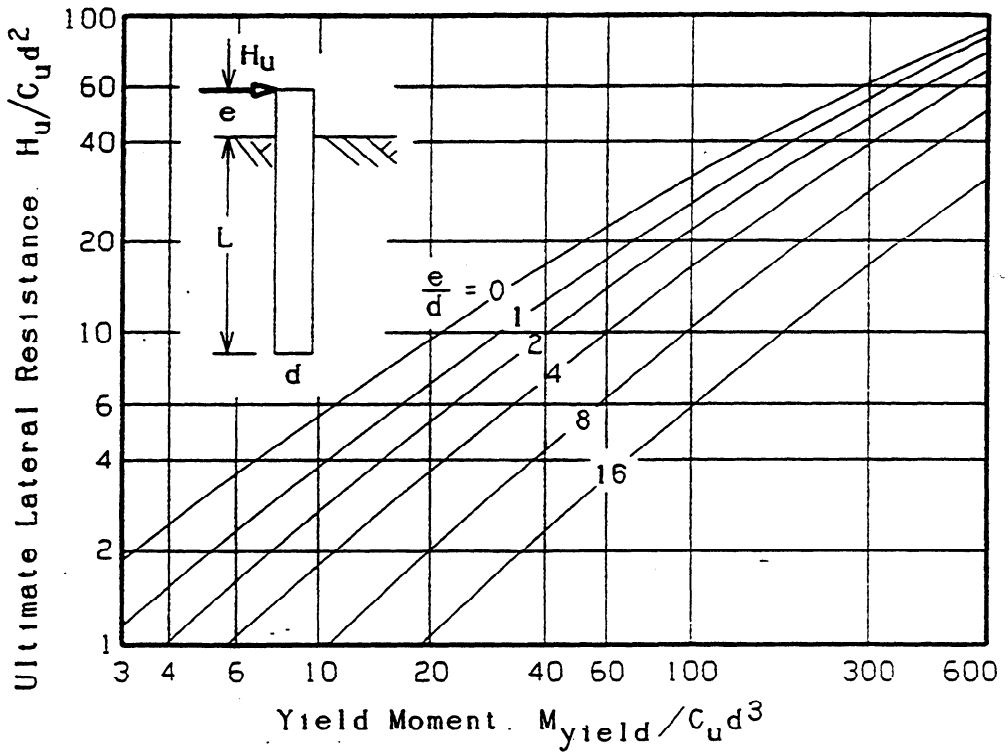


**FIGURE 7**

Figure 7 may be used for long piles. Curves developed by Broms for e/d values relate the soils ultimate lateral resistance to the yield moment of the pile. This figure is used when the pile embedment length ratio L/d is greater than 20 and when the yield moment of the pile is less than the moment due to the ultimate lateral soil resistance.

The safe single use working load for free headed piles in cohesive soil may be taken as one-half of the ultimate load value.

## EXAMPLE PROBLEM, LATERAL LOADING IN COHESIVE SOIL

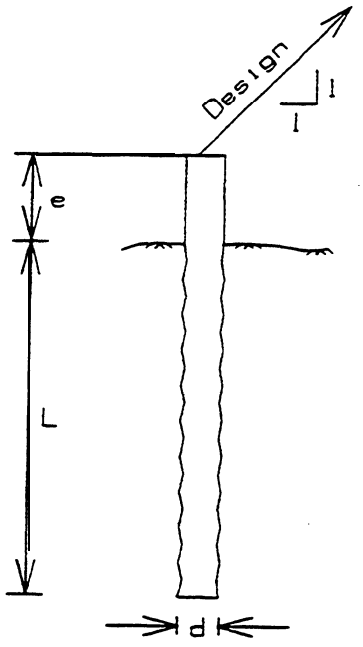


$C_u$ = 1,000 psf
$\gamma_s$ = 110 pcf
$\gamma_c$ = 145 pcf
L = 8'-0"
pile d = 1'-6"
e = 2'-0"

Single use loading

Determine the allowable loading for this pile:

Solution:

L/d = 5.33 e/a = 2/1.5 = 1.33

From Figure 6:

$$\frac{H_{ULT}}{C_u d^2} \approx 5.5 \quad \text{when } e = 2' - 0"$$

$$H_{ULT} = C_u d^2(5.5) = (1{,}000)(1.5)^2(5.5) = 12{,}375 \text{ Lbs}$$

$$\text{Working Load Value for H} = \frac{12{,}375}{2} = \qquad 6{,}188 \text{ Lbs}$$

Compute $f_c$ and $M_{ULT}$:

$$f_c = \frac{H_{ULT}}{9C_u d} = \frac{12{,}375}{9(1{,}000)(1.5)} = 0.917 \text{ feet}$$

$$M_{ULT} = H_{ULT}\left[e + 1.5d + \frac{f_c}{2}\right] = (12{,}375)[\ 2 + 2.25 + 0.46\ ]$$

$$= 58{,}266 \text{ Ft-Lb}$$

$$\text{Working Load Value for M} = \frac{58{,}266}{2} = \qquad 29{,}133 \text{ Ft-Lbs}$$

## CONCRETE STRESSES

Concrete stresses in the pile may be computed by rigorous analysis; or may be approximated by assuming an average compressive condition over one-half of the pile width. The maximum compressive stress is located on one face of the pile. It should be assumed that the concrete will not take tensile forces on the other half of the pile. Tensile forces will be resisted by reinforcing steel.

For simplified compressive analysis use:

$$\textbf{Compressive stress } f_c = \frac{Md}{I_g 2} - \frac{V'}{A_g}$$

Where: d = Pile diameter.
$I_g$ = Moment of Inertia on the gross pile section.
$A_g$ = Gross cross-sectional pile area.
V' = Tensile force (vertical force component) less pile weight above plane of zero Shear. Distance from pile top to the plane of zero shear is defined as $M_{ULT}/H_{ULT}$.

The computed maximum compressive stress $f_c$ shall not be greater than one-half of the concrete cylinder strength $(f'_c)$ anticipated at the time the pile is to be loaded.

The allowable shear in the pile ($V_U$) normal to the pile should not exceed 2 times the square root of $f'_c$ $(2\sqrt{f'_c})$.

## EXAMPLE PROBLEM, CONCRETE STRESS

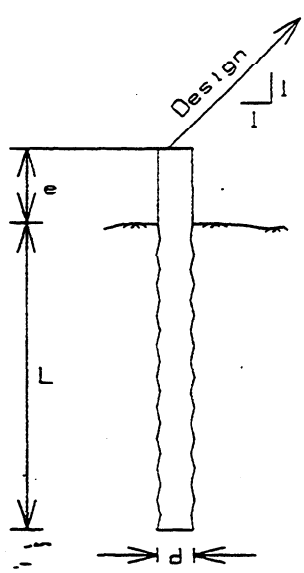


$V_{MAX}$ = 6,188 Lbs
$H_{MAX}$ = 6,188 Lbs
$M_{MAX}$ = 29,133 Ft-Lbs
L = 8'-0"
pile d = 1'-6"
e = 2'- 0"
$f'_c$ = 3,250

Single use loading

Determine the concrete stress for this pile:

Solution:

With forces acting through the center of the pile consider one-half of pile in compression.

Use the simplified equation:

$$f_c = \frac{Md}{2I_g} - \frac{V'}{A_g}$$

where V' = 6,188 minus the pile weight above the plane of zero shear.

$$\text{Distance to plane of zero shear} \approx \frac{M_{ULT}}{H_{ULT}} \approx \frac{M_{MAX}}{H_{MAX}}$$

$$\approx \frac{29,133}{6,188} \approx 4.7 \text{ feet}$$

$$\text{Pile Weight} = (4.7 + 2)(\gamma_c)(\pi)(\frac{d}{2})^2$$

$$= 6.7(145)(\pi)(\frac{1.5}{2})^2 = 1,717 \text{ Lbs}$$

V' = 6,l88 - 1,717 = 4,471 Lbs

$$f_c = \frac{29,133(12)(1.5)(12)}{2(5153.0)} - \frac{4,471}{254.5}$$

$$= 611 - 18 = 593 \text{ psi} < 1,625 = \frac{f'_c}{2}$$

**BAR REINFORCING STRESSES**

Bar reinforcing steel stresses may be analyzed by rigorous methods; or may be approximated by making several assumptions.

Ignore concrete stress and assume the pile moment is to be resisted by the reinforcing steel. For symmetrical reinforcing it can be assumed that the reinforcing takes compression as well as tension. A simplified equation may be used to determine the tensile reinforcingsteel stress.

Tensile stress $f_s = \frac{Md_s}{I_{bars}\ 2} + \frac{V'}{\Sigma A_s}$

Where: $d_3$ = Distance between center of gravity of bars either side of the pile neutral axis.

$I_{bars}$ = $\Sigma[I_o + A_s(d_s/2)^2] \approx \Sigma A_s(d_s/2)^2$

V' = Tensile force (vertical force component) less weight of pile above plane of zero shear, which is located a distance of $M_{ULT}/H_{ULT}$ below the pile top.

Area of bars either side of the neutral axis.

For 2 reinforcing bars, one either side of the pile center line symmetrically placed, the simplified equations is:

$$f_s = \frac{M\frac{d_s}{2}}{(2)A_s\left(\frac{d_s}{2}\right)^2} + \frac{V'}{\Sigma A_s} = \frac{M}{A_s d_s} + \frac{V'}{\Sigma A_s}$$

The allowable stress in the reinforcing steel ($F_s$) should not exceed 0.70 $F_y$.

EXAMPLE PROBLEM, BAR REINFORCING STRESS

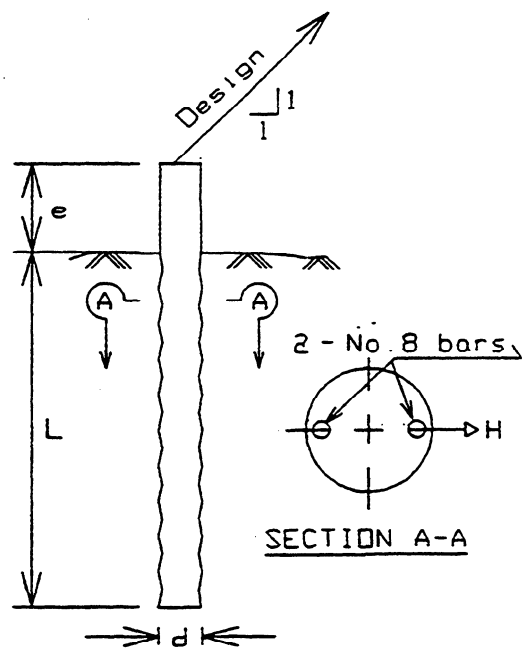


$V_{MAX}$ = 6,188 Lbs
$H_{MAX}$ = 6,188 Lbs
$M_{MAX}$ = 29,133 Ft-Lbs
L = 8'-0"
pile d = 1'-6"
e = 2'-0"

Reinforcing = 2 - #8 grade 60 bars full length installed 2" clear placed symmetrically along the pile axis.

Single use loading

Determine the bar reinforcing stress in this pile:

Solution:

$d_s = d_{pile} - 2(2\text{" clear}) - 2(d_{bar}/2) = 18 - 2(2) - 2(1.0/2) = 13\text{"}$

$A_s = 0.79 \text{ in}^2$

$\Sigma A_s = 2(0.79) = 1.58 \text{ in}^2$

$V' = 6{,}188 - 1{,}717 = 4{,}471 \text{ Lbs}$

$$f_s = \frac{M}{A_s d_s} + \frac{V'}{\Sigma A_s} = \frac{29{,}133(12)}{(0.79)(13)} + \frac{4{,}471}{1.58}$$

$= 34{,}041 + 2{,}830$

$= 36{,}871 < 0.7(60{,}000) = 42{,}000 \text{ psi}$

## RESISTANCE TO COMBINED UPLIFT AND HORIZONTAL LOAD

Pile load tests have confirmed that the uplift resistance of piling is increased when the pile is also subjected to a lateral loading. Therefore it is believed acceptable to simply limit combined loadings so as not to exceed the permissible (safety factors considered) $H_{ULT}$ and $V_{ULT}$ loadings.

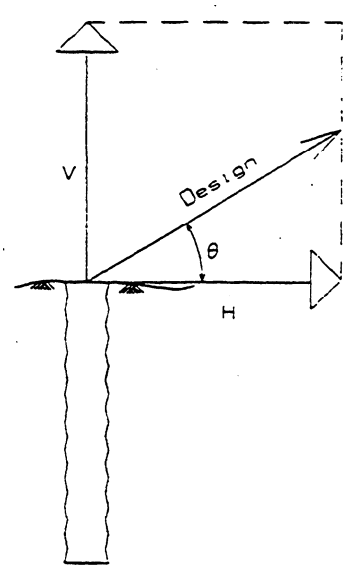


**FIGURE 8**

Design load is limited to the smaller of either $V/\sin\theta$ or $H/\cos\theta$.

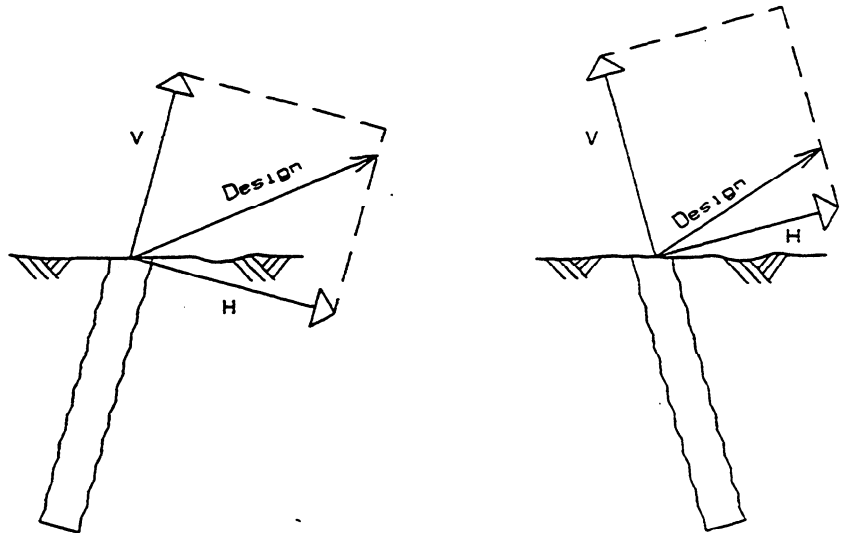


**FIGURE 9**

Tests have also demonstrated that when the top of the pile is battered toward the load its lateral capacity is substantially greater than when battered away from the load. H and V force components for battered piles are derived in the same manner as for plumb piles. The design load is then limited to the lesser of the H or V load resolved to the slope at which the design load will be acting. Piles battered toward and away from the design loading are depicted in Figure 9.

EXAMPLE PROBLEM. COMBINED UPLIFT AND LATERAL LOAD

A plumb pile has these load capacities:

$V_{ULT}$ = 15,800 Lbs $H_{ULT}$ = 11,900 Lbs

What single use Design load would the pile resist:

a) For a plumb pile?

b) For a pile that is battered 15° towards the load?

Solution:

**a) Plumb pile**

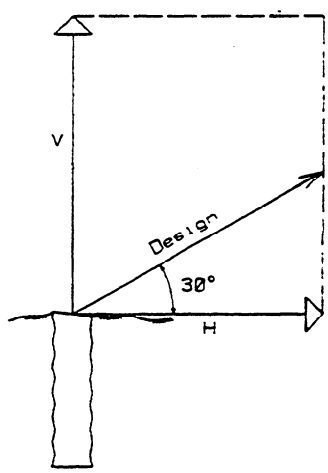


$$\text{Design} = \frac{15{,}800 \text{ Lbs}}{\text{Sin } 30°} = 31{,}600 \text{ Lbs}$$

$$\text{Design} = \frac{11{,}900 \text{ Lbs}}{\text{Cos } 30°} = 13{,}741 \text{ Lbs}$$

The design loading of 13,741 pounds governs.

$$\textbf{Design working load} = \frac{13{,}741}{2} = 6{,}871 \text{ Lbs}$$

b) Battered pile

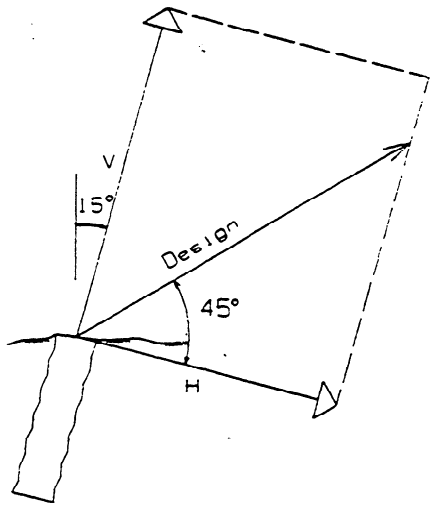


$$\text{Design} = \frac{15{,}800}{\sin 45°}$$

$$= 22{,}345 \text{ Lbs}$$

$$\text{Design} = \frac{11{,}900}{\cos 45°}$$

$$= 16{,}829 \text{ Lbs}$$

Working Load:

$$\frac{16{,}829}{2} = 8{,}415 \text{ Lbs}$$

The forgoing equations may be used when the horizontal force H is to be less than the computed ultimate lateral force $H_{ULT}$.

REFERENCES


Broms, B. B. (March 1964) *Lateral Resistance of Piles in Cohesive Soils,* ASCE Journal of Soil Mechanics and Foundation Division, Vol. 90, No. SM2.

Broms, B. B. (May 1964) *Lateral Resistance of Piles in Cohesionless Soils,* ASCE Journal of Soil Mechanics and Foundation Division, Vol. 90, No. SM3.

Broms, B. B. (May 1965) *Design of Laterally Loaded Piles,* ASCE Journal of Soil Mechanics and Foundation Division, Vol. 91, No, SM3.

FHWA (1983) Drilled Shafts: *Construction Procedures and Design Methods,* Publication No. FHWA-HI-88-042, 564p.

Poulos, H. G. and Davis, E.H. (1980) *Pile Foundation Analysis and Design,* John Wiley & Sons Inc.

EXAMPLE PROBLEM

A contractor proposes to use an 18 inch diameter poured in-place concrete pile as an anchorage for his falsework cable bracing. Prior. to being used for bracing the falsework this pile will be used as an anchorage for the column reinforcing cage and form.

This anchor pile will be subjected to three short term loads in the same direction.

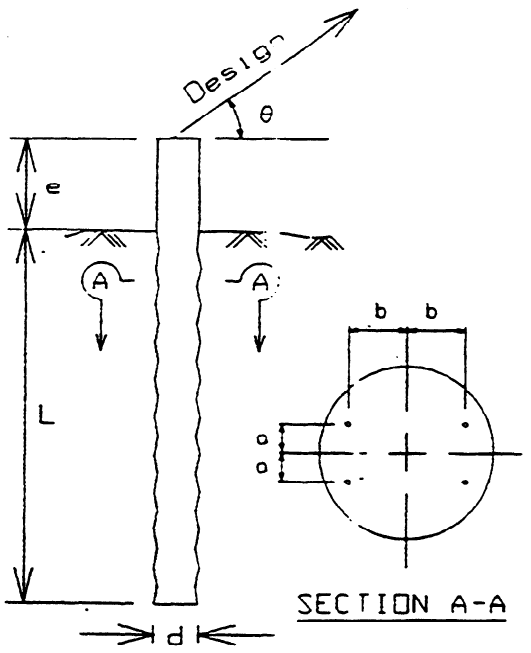


Sandy Soil (cohesionless)
$\phi$ = 35°
$\gamma_s$ = 110 pcf
$\gamma_c$ = 145 pcf
Minimum $f'_c$ = 3250 psi
2-#5 bars each side of centerline, grade 60, full length
a = 2 in
b = 6 1/4 in
Design = 8,000 Lbs
$\theta$ = 35°
e = 1.2 Ft
L = 12 Ft - with lower 2 Ft submerged

Constant Parameters

$K_p = \tan^2(45° + \phi/2) = 3.69$

$\frac{e}{d} = \frac{1.2}{1.5} = 0.8$

$\frac{L}{d} = \frac{12}{1.5} = 8.0$

8.0 < 20 (meets short pile criteria)

Pile Area = $\frac{\pi d^2}{4} = 254.5 \text{ in}^2$

Pile $I_g = \frac{\pi d^4}{64} = 5{,}153.0 \text{ in}^4$

$\frac{f'_c}{2} = \frac{3{,}250}{2} = 1{,}625$ psi

$V_u = 2\sqrt{f'_c} = 2\sqrt{3250} = 114$ psi

$A_s = 0.31$ in$^2$ $\quad d_{bar} = 0.625$ in

allowable $f_s = 0.70\ f_y = 0.70(60{,}000) = 42{,}000$ psi

1. Clearance

Check distance from center of pile to center of bar.

$$9 \text{ in} - \left\{ \left[ (6.25)^2 + (2)^2 \right]^{1/2} + \frac{0.625}{2} \right\} = 2.06 > 2 \text{ in O.K.}$$

$d_s = 2b = (2)(6.25) = 12.50$ in

2. Load Components

$H_{DESIGN}$ = Design cos 35° = (8,000)(cos 35°) = 6,553 Lbs
$V_{DESIGN}$ = Design sin 35° = (8,000)(sin 35°) = 4,589 Lbs

3. Safety Factor

SF = 2.0 + (x-1)(0.25) = 2.0 + (3-1)(0.25)
= 2.5 for lateral soil loading

4. Uplift Capacity Dependent Upon Soil Properties

$S = \beta\sigma_Z$ where:

$Z = 12$ ft with $Z_{dry} = 10'$ and $Z_{wet} = 2'$

$\sigma_Z = (10)(110) + 2(110 - 62.4) = 1{,}195$ pcf

$\beta = 1.5 - 0.315(12)^{1/2} = 0.41 > 0.25$ O.K.

S = .41(1,195) = 490 psf < 4,000 psf 0.K.

Net pile shearing resistance = $\pi dzS$

$(\pi)(1.5)(12)(490)$

= 27,709 Lbs

Pile weight = $\dfrac{\pi(1.5)^2(13.2)(145)}{4} = 3{,}382$ Lbs

Ultimate load capacity = 27,709 + 3,382 = 31,091 Lbs

Working load = $\dfrac{31{,}091}{2}$ = 15,546 Lbs > 4,589 Lbs O.K.

This soil is capable of resisting the applied vertical load.

5. <u>Lateral Capacity Dependent Upon Soil Properties</u>

4d = (4) (1.5) = 6.0 < 12' (Meets minimum embedment length requirements)

Use weighted average of effective soil densities to account for variable soil layers.

$$\gamma_s = \frac{(10)(110) + (2)(110 - 62.4)}{12} = 99.6 \text{ pcf}$$

From Figure 3: $\frac{H_{ULT}}{K_p \gamma_s d^3} \approx 16$

$$H_{ULT} = K_p \gamma_s d^3 (16) = (3.69)(99.6)(1.5)^3(16) = 19{,}846 \text{ Lbs}$$

$$f_g = \left[\frac{H_{ULT}}{1.5 \gamma_s d K_p}\right]^{1/2}$$

$$= \left[\frac{19{,}846}{1.5(99.6)(1.5)(3.69)}\right]^{1/2} = 4.90 \text{ feet}$$

$$M_{ULT} = H_{ULT}\left[e + \frac{2f_g}{3}\right]$$

$$= (19{,}846)\left[1.2 + \frac{(2)(4.90)}{3}\right] = 88{,}645 \text{ Ft-Lbs}$$

**Working Load Value for** $H_{ULT} = \frac{19{,}846}{2.5} = 7{,}938$ Lbs > 6,553 Lbs

**Working Load Value for** $M_{ULT} = \frac{88{,}645}{2.5} =$ 35,458 Ft-Lbs

The soil is capable of resisting the applied horizontal load.

6 . <u>Pile Adequacy</u>

**Pile capacity is to be based on design loads. The lateral force $H_{DESIGN}$ may be substituted for $H_{ULT}$ and $M_{DESIGN}$ for $M_{ULT}$ in the critical soil equations.**

$V_{DESIGN}$ = 4,589 Lbs

$H_{DESIGN}$ = 6,553 Lbs

$$f_g = \left[\frac{H_{ULT}}{1.5\gamma_s d k_p}\right]^{1/2}$$

$$f_g = \left[\frac{6,553}{(1.5)(99.6)(1.5)(3.69)}\right]^{1/2} = 2.82 \text{ Ft}$$

$$M_{ULT} = H_{ULT}\left[e + \frac{2f_g}{3}\right]$$

$$M_{DESIGN} = (6,553)\left[1.2 + \frac{(2)(2.82)}{3}\right] = 20,183 \text{ Ft-Lbs}$$

Depth to plane of zero shear of pile $\approx \frac{M_{DESIGN}}{H_{DESIGN}} \approx \frac{20,183}{6,553} \approx 3.08$ Ft

7. <u>Concrete Stress</u>

Pile weight $= (3.08 + 1.2)\gamma_c \pi \left(\frac{d}{2}\right)^2$

$$= (4.28)(140)(\pi)\left(\frac{1.5}{2}\right)^2 = 1,059 \text{ Lbs}$$

$V' = 4,589 - 1,059 = 3,530$ Lbs

$$f_c = \frac{Md}{2I_g} - \frac{V'}{A_g}$$

$$f_c = \frac{(20,183)(12)(1.5)(12)}{(2)(5,153)} - \frac{3,530}{254.5}$$

$$= 423 - 14 = 409 \text{ psi} < 1,625 \text{ psi} = \frac{f'_c}{2} \quad \text{O.K.}$$

$$v_u = \frac{V}{0.5bd} = \frac{6,553}{(0.5)(254.5)} = 51 \text{ psi} < 114 \text{ psi}$$

8. <u>Bar Reinforcing Stress</u>

$$f_s = \frac{M}{A_s d_s} + \frac{V'}{\Sigma A_s} = \frac{(20,183)(12)}{2(0.31)(12.50)} + \frac{3,530}{1.24}$$

$$= 31,251 + 2,847 = 34,098 < 0.7(60,000) \text{ psi} \quad \text{O.K.}$$

This pile is capable of resisting the applied loads. The pile is satisfactory for use as designed by the contractor.

# FALSEWORK WELDING

The following guidelines are applicable to projects advertised after December 3, 2001.

Occasionally and depending on material availability, it is necessary to weld two steel members to produce a longer falsework member. The Falsework Manual makes two references to welding (Section 9-1.05A- " Welded Splices in Falsework Beams", and Section 9-1.08- " Miscellaneous Field Welding"). The importance of the welding inspection in conjunction with the public safety warranted the update to the existing specifications.

The new falsework welding specifications require Contractors to include the welding standard they intend to follow (e.g.: AWS D1.1, AWS D1.5, etc.) on the falsework plans. It also distinguishes between on-site and off-site welding:

On-site welding is any welding done at the project site for the purpose of erecting the falsework and adjoining two falsework members. On-site welding is further divided into minor or major welding.

Minor welding entails welding falsework members where the stress demand is less than 1000 lbs. per inch for each 1/8" (175 N per mm for each 3mm) of fillet weld. In such a case the method of inspection need not be called out on the plans.

Major welding involves stress demand level above 1000 lbs. per inch for each 1/8" (175 N for each 3mm) requirement for fillet weld or other weld types utilized and must conform to AWS D1.1 or other recognized welding standard. The falsework working drawings should specify the welding standard to be utilized and the Contractor shall follow the welding and inspection standards. Generally these would include; procedure specification for qualifying the weld, certification procedure for welders and inspection utilizing certified welding inspector. Most specifications only require visual inspection for this type of weld (e.g.: pipe columns, pile splices).

In addition to the major welding requirements above, the specifications also require that for beams (stringers) welded on-site, the Contractor shall perform nondestructive testing (NDT). At the option of the Contractor, either ultrasonic testing (UT) or radiographic testing (RT) shall be used as the method of NDT for each field weld

and any repair made to a previously welded splice in a steel beam. Testing shall be performed at locations selected by the Contractor. The length of a splice weld where NDT shall be performed shall be a cumulative weld length equal to 25 percent of the original splice weld length. The cover pass shall be grounded smooth at the locations to be tested. The acceptance criteria shall conform to the requirements of AWS D1.1, Section 6, for cyclically loaded non-tubular connections subject to tensile stress. If repairs are required in a portion of the weld, additional NDT shall be performed on the repaired sections. The NDT method chosen shall be used for an entire splice evaluation including any required repairs. This specification applies to beams subjected to flexural stresses (stringers, cap and sill beams). For the purpose of this memorandum, flexural and non-flexural members are defined as following:

- Flexural falsework members can be identified as those for which the applied loading results in a bending stress (moment resisting members) that governs the design and where shear/axial stresses are considered a secondary component of the applied load (e.g.: stringers, caps, sill beams).

- Non-flexural falsework members can be identified as those for which the applied loading results in a shear/axial stress that governs the design and where the bending stress is a secondary component of the applied load (e.g.: pipe columns, pile splices).

Off-site falsework member welding is defined as any previous weld/splice that is made prior to the member being shipped to the site. In such cases the Contractor shall perform any necessary testing and inspection required to certify the ability of the falsework members to sustain the stresses imposed by the falsework design. This effort shall be at the discretion of the Contractor and their falsework design engineer of record.

In all cases above, the specifications require that the contractor shall certify in writing the ability of the falsework to carry the loads imposed on it, shall be signed by a Civil Engineer licensed in the State of California, and shall be provided to the Engineer before any concrete is placed.

# CAP BEAM CENTER LOADING STRIPS

The use of timber center loading (strip or shim) as a method for transferring the load from stringers to cap beams has become more common. Center loading strips aid in transferring the vertical reaction load from stringer to cap beam. When center loading strips are used, it is critical that they are symmetrically located about a vertical line that passes through the webs of both the stringer and cap beams (see figures 1 and 2). This ensures the transfer of the force reactions through the webs of both beams and alleviates unwanted moment reactions.

The allowable compressive stress for timber shims with maximum thickness of 6 inches (150 mm) and loaded perpendicular to grain may be increased to 900 psi (6.2 MPa). This maximum thickness limitation eliminates excessive built-up between the cap and the stringer beam that could lead to stability problems. Where the shim is formed by multiple built-up sections, the maximum allowable compressive stress should not exceed 450 psi.

This revised allowable stress supersedes the allowable stress listed in Section 4-2.03D, "Compression Perpendicular to the Grain" of the Falsework Manual and in Section 51-1.06A (2), "Design Stresses, Loadings, and Deflections" of the Standard Specifications.

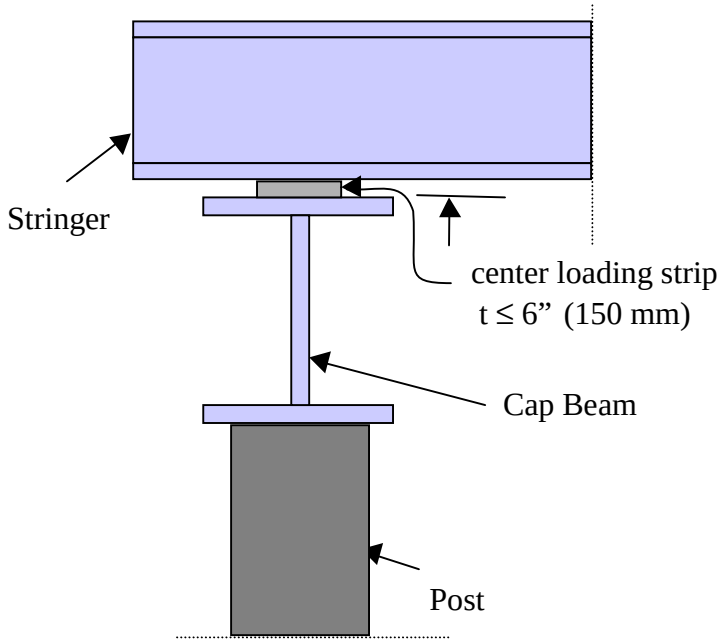


Figure 1

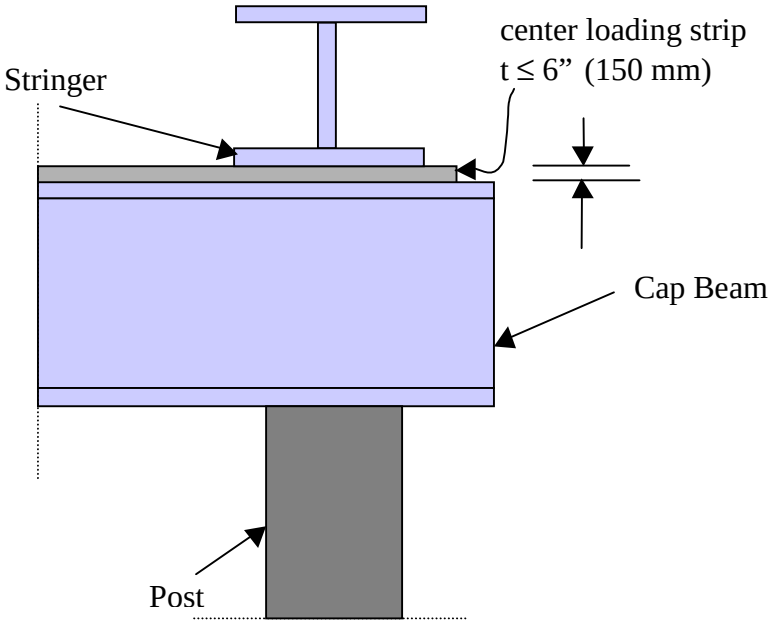


Figure 2

# FALSEWORK TOWER STABILITY

Falsework towers with discontinuous legs require additional analysis to ensure stability (see Chapter 5) in the various stages of loading. The stages of loading are when the tower is unloaded, when loaded with falsework stringers, and during various loaded conditions involving concrete placement.

In addition to resisting collapse, the tower must be able to resist overturning and sliding at each plane that the tower is discontinuous.

It is essential to remember that loaded towers generally will be more than adequately capable of resisting overturning moments. However, unloaded towers, both during erection and during removal sequences are the most vulnerable to overturning. Removal of portions of tower units while other portions are still loaded can lead to very unstable conditions.

The best way to illustrate proper methodology is with an example problem. In the following example assume that the bracing and other falsework features are adequate. It is important to consider the effects of concrete pour sequences, that is, what will happen with concrete weight in one long span but not in the other long span. The purpose of the example problem is solely to demonstrate stability analysis. Refer to Figure on Sheet C-12-2.

EXAMPLE PROBLEM

**$P_1$ = 6,700 Lbs**
**$P_2$ = 7,000 Lbs**
**$\gamma_w$ = weight of wood = 35 Lb/CF**
**H = 1,050 Lbs acting on one-half of a tower unit.**

<u>Shear Resistance</u>

The shear at the elevation of the plane B discontinuity will govern since frictional resistance increases with the weight of additional material below that elevation.

Check shear resistance at plane B. The active horizontal load of 1,050 pounds will be resisted by the frictional capacity of 2 tower legs.

Single post weight= 40(35) = 1,400 Lb
Single cap weight = 10(35) = 350 Lb

Resistance = 0.3[6,700 + 7,000 + 2(1,400) + 2(1/2) (350)]
= 5,055 > 1,050 Lb

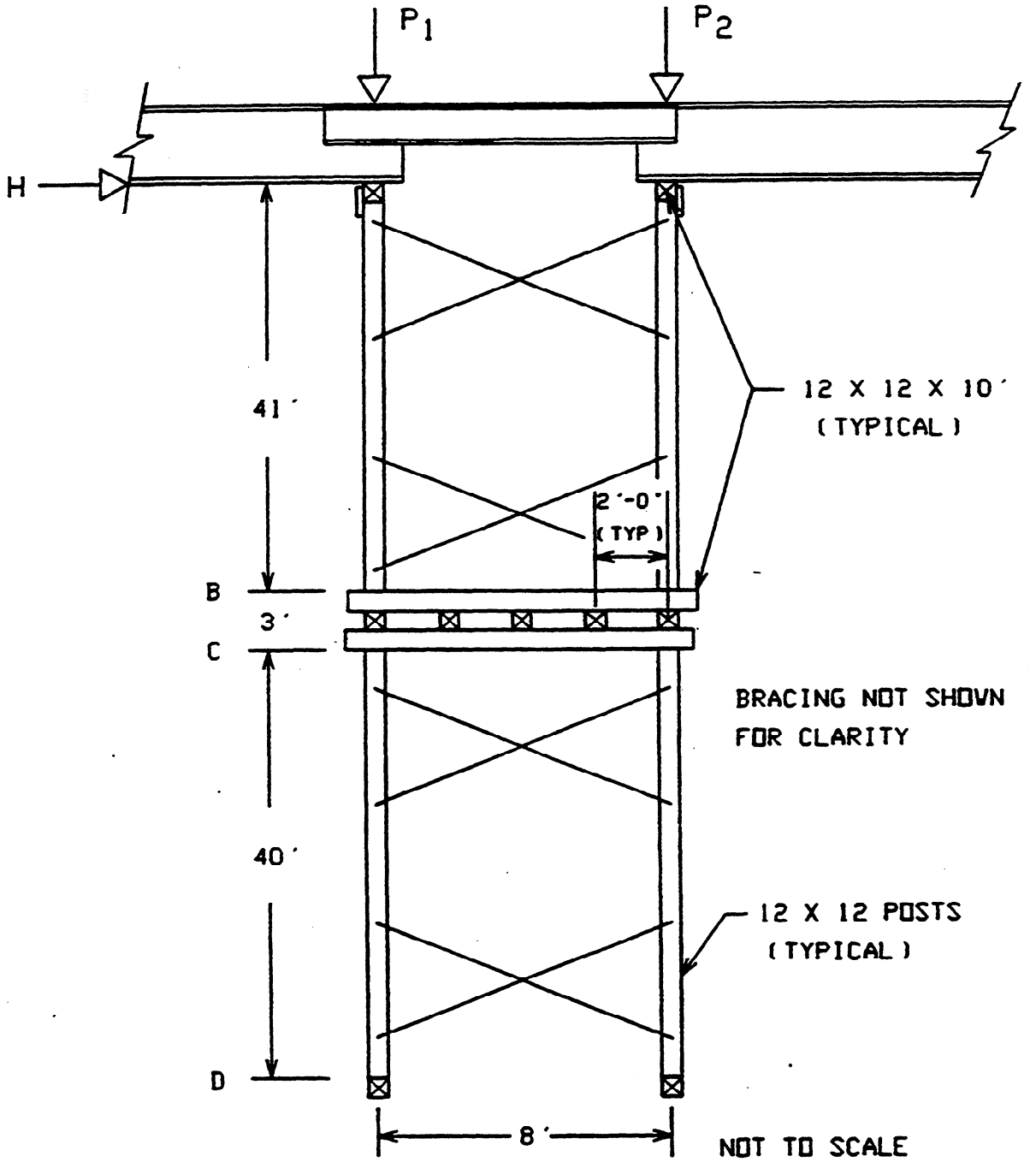
P1
P2
H
41'
12 X 12 X 10'
(TYPICAL)
2'-0"
(TYP)
B
3'
C
BRACING NOT SHOWN
FOR CLARITY
40'
12 X 12 POSTS
(TYPICAL)
D
8'
NOT TO SCALE

FIGURE 1

Overturning Resistance

Check overturning resistance at plane B, C, and D by taking moments about the heavier loaded post.

At Plane B:

$M_{OT}$ = 41(H) = 41(1,050) = 43,050 Ft-Lbs.

$M_R$ = 8(6,700) = 53,600
8(1,400) = 11,200
8(350/2) = 1,400
66,200 Ft-Lbs.

Safety Factor = 66,200/43,050 = 1.54

At Plane C:

$M_{OT}$ = 44(1,050) = 46,200 Ft-Lbs.

$M_R$ = Previous = 66,200 Ft-Lbs.
2 (350) (4) = 2,800
(l/2)(350)(8) = 1,400
(l/2)(350)(6) = 1,050
(1/2)(350)(4) = 700
(1/2) (350) (2) = 350
72,500 Ft-Lbs.

Safety Factor = 72,500/46,200 = 1.57

At Plane D:

$M_{OT}$ = 84(1,050) = 88,200 Ft-Lbs.

$M_R$ = Previous = 72,500 Ft-Lbs.
8(1,400) = 11,200
83,700 Ft-Lbs.

Safety Factor = 83,700/88,200 = 0.95 < 1.00
External bracing will be required to prevent overturning!

## ALUMA FRAME SHORING SYSTEMS

Aluma Frame Shoring System (Aluma-Systems aluminum shoring) is approved for use up to a maximum height of 9 tiers. This system will be initially furnished by the Burke Company, a subsidiary of Aluma-Systems, on a rental basis.

This approval is based on the results of load tests for 22 foot maximum height towers, and on three dimensional computer modeling for higher tower configurations. Testing was performed on a plumb 3 tier high tower with various jack-head and extension-staff extensions. The results from the computer modeling were correlated to this test loading. The company's weaker braces were used in the test loading and for the computer modeling, but were not a factor in tower failure; tower failure was always by leg buckling. Leg buckling was found to be the most critical near the bottoms of the towers; therefore, jack extensions at the bottoms of towers should be kept to a minimum. As might be expected, maximum leg loadings decrease with increasing tower heights, principally because of constraints involving horizontal stability.

Falsework plans for Aluma-Systems aluminum shoring should include engineering data supplied from the manufacturer. Such data should include, as a minimum, two sheets approximately 24" x 36" numbered CALBR-01 AND CALBR-02, along with thirty 8 1/2" x 11" sheets dated DEC 92, titled "CALIFORNIA BRIDGE SHORING", numbered 1 of 30 through 30 of 30.

Tower leg load charts and other plan information apply specifically to 3 different tower height configurations: 1 to 3 tiers high, 4 to 6 tiers high, and 7 to 9 tiers high. The charts relate leg loadings to curves representing horizontal loadings for towers not adjacent to traffic. The Caltrans controlling horizontal load, along with a safety factor of 2.5 for the tower leg loadings is included in the load charts. For tower heights of less than 22 feet wind loadings do not control. Curves are included in the charts, for towers over three tiers high, which permit higher leg loadings if certain specific horizontal load restraints are furnished in the form of external bracing. External bracing in the direction of the cross bracing will always be required for towers over 6 tiers high.

The term H(s) is used in the charts to represent that portion of horizontal loads greater than the Caltrans controlling (wind or 2% of the dead load) horizontal load that may be applied to the towers above the soffit elevation. For Caltrans usage H(s) will normally be zero since the controlling wind or 2% of the dead loading is included in the curve plots.

A one-tier high tower consists of 2 end frames separated by pin end connection cross bracing on each. side of the frames. End frames are composed of extruded aluminum legs and fixed end connection type bracing. Cross braces may be Waco Shore-X of 1 inch round steel tubes which provide frame spacings of 4, 6, 8, and 10 feet; or Hi-Load cross braces of 1 l/4" x 1 l/4" steel angles which provide frame spacings of 4, 5, 7, and 10 f e e t .

Extension staffs are 3'- 10" long straight aluminum members which fit into tower legs and are held in place vertically with pins placed through holes in the legs and the extension staff. Extension staffs may be installed in tower legs at either the top or bottom of towers. Extension staffs, when used, constitute a tier in a tower makeup-

PERMITTED USE

Aluma-Systems aluminum falsework shoring towers may be used for all locations not adjacent to traffic provided the limitations for live load eccentricity, tower height, length of jack extensions (18 inches maximum) and extension staffs (25 inches maximum), maximum permitted leg loadings, and leg load ratios are not exceeded. External bracing may be required at the tops of towers more than 3 tiers high.

Jack extensions, to be used within the parameters shown on the various graphs, are measured between the end of the post or extension staff and the nearest side of the jack plate, as shown on sheet 5 of 30. Direct interpolation may be used between the 12" and 18" maximum jack extensions shown on the graphs.

All cross bracing within a tower composition shall have the same dimension between connecting holes so that all legs of the tow&s can be erected plumb.

Single tower legs may be bar-braced to tower end frames as depicted on plan sheet 11 of 30 provided additional bracing is installed in accordance with the included instructions.

<u>Towers up to 3 Tiers High</u>

For towers up to 3 tiers high, falsework plan sheets 5 of 30 and 6 of 30 relate safe working load per tower leg to the amount of jack extension.

Sheet 5 of 30 pertains to tower heights of 20 feet or less when extension staffs are not used, and jack extensions do not exceed l8 inches. When the shoring towers are to resist horizontal loads, the maximum leg loadings are 11.7 and 15.6

Kips for maximum jack extensions of 18 and 12 inches respectively. Slightly higher leg loads may be used if horizontal loads will not be transferred to the towers.

Sheet 6 of 30 pertains to tower heights of 22 feet or less where extension staffs may be used at both tops and bottoms of the towers. When the shoring towers are to resist the horizontal loads the maximum leg loadings are 7.5 Kips and 12.4 Kips for jack plus extension staff extending 43 inches and 25 inches maximum respectively. Slightly higher leg loadings may be used if horizontal loads will not be transferred to the towers.

## Towers up to 9 Tiers High

When towers are to be erected more than 3 tiers high they are to be braced with diagonal and horizontal tube bracing into "Super Tower" configurations as depicted on sheet CALBR-02. A "Super Tower" is a group of towers arranged in a quadrilateral configuration with horizontal tubes installed so that they connect all towers at the tops of every third tier, and with diagonal tubes at the corner towers connecting every third tier in a zigzag pattern. When towers are to be spaced closer than 6 feet, and the tower height is to be more than 3 tiers, two adjacent towers must be laced together to form corner tower units. The tube bracing may be either steel or aluminum with properties as shown on sheet 26 of 30.

For towers up to 9 tiers high, falsework plan sheets 7 of 30 through 10 of 30 delineate permissible leg loads for towers in a "Super Tower" configuration. The graphs on these pages relate maximum leg loads of P(max) to leg load ratios of P(min)/P(max). The minimum to-maximum leg load ratios are important when considering the sequence and direction of placing concrete. In bridge work, for example, one or two tower legs can be heavily loaded during concrete placement while remaining legs support only the formwork and reinforcing.

Falsework plan sheets 7 of 30 and 8 of 30 pertain to towers up to 6 tiers high. External bracing will be required when leg loadings will exceed the loads provided for in the lowest curve (labeled "unrestrained") of the charts. This external bracing will need to resist specified horizontal loads, in addition to limiting lateral deflections at the tops of the towers to the amounts shown on the graphs.

The graphs on sheets 9 of 30 and 10 of 30 pertain to towers up to 9 tiers high. External bracing will be required for all leg loadings for tower heights exceeding 6 tiers. This external bracing will need to resist specified horizontal

loads, in addition to limiting lateral deflections at the tops of the towers to the amounts shown in the graphs.

An additional refinement for towers heights between 4 to 9 tiers is that external bracing will be required to limit lateral deflections at the tops of the towers to the amounts shown in the graphs.

Extension staffs are allowed at the tops of towers only for tower heights greater than 3 tiers. Extension staffs are considered to constitute a tier even though the maximum permitted extension is limited to 25 inches.

General

Elastic shortening of the aluminum posts must be included in net settlement considerations. The modulus of elasticity for the extruded aluminum alloy composition of the tower legs is approximately $10.2 \times 10^6$ psi.

Wind loadings on towers may be computed as outlined in Section 3-1.05A of the Falsework Manual. The shape factor for Aluma-System shoring shall be assumed as 2.2; which is the same as for heavy-duty shoring. The value to use for the projected area as defined in Figure 3-l of the falsework manual for two legs per face is 1.50 square feet per foot of tower height.

The maximum load on one leg of a tower, or on one end frame section of a tower, should not exceed four times the load on the opposite leg or frame under any given sequence of loading conditions.

The foundation design should be scrutinized to ensure that the vertical loads are uniformly distributed and differential settlements are minimized.

Additional or connecting members such as legs, external bracing, and aluminum stringers were not included in physical load testing or in computer modeling. Additional strap connected legs, if shown on the plans, may not be considered for use in the loading analysis.

Section 51-l.O6A(3), of the Standard Specifications permit only steel or wood posts adjacent to traffic openings, therefore Aluma-Systems aluminum shoring may not be used at these locations.

Aluma-Systems shoring will often be rental units with the tower falsework designed by the rental company's engineer who will then be responsible for compliance with the requirements of Section 1717 in the Cal/OSHA Construction Safety Orders.

Aluma-Systems aluminum shoring components will generally be identifiable by paste on stickers or by alpha-numeric stamped impressions.

A list of current distribution centers for Aluma-Systems Shoring is included below:

ENGINEERING AND DISTRIBUTION CENTERS OF THE BURKE COMPANY

Livermore, CA 94550
5340 Brisa Court l
(714) 556 3900

Fountain Valley. CA 92708
11140 Talbert Ave.
(714) 556 4510

Sacramento, CA 95815
1730 Lathrop Way
(916) 920 4343

DISTRIBUTION CENTERS ONLY OF THE BURKE COMPANY

Fresno, CA 93711
313 West Falbrook Ave.
(209) 276 2415

Milpitas, CA 95035
1550 Gladding Court
(408) 262 9100

Montebello, CA 90640
1625 West Washington Blvd.
(213) 724 6690

Oakland, CA 94607
310 Union Street
(415) 465 3900

San Diego, CA 92102
4937 Market Street
(619) 297 0357

Santa Rosa, CA 95407
3401 Standish Ave.
(707) 585 3900

# WACO 25 KIP TOWERS

## THE PROBLEM - WITH WACO 25 KIP SHORING:

In November, 1992 during placement of concrete for stems and soffit of a box girder bridge a single 25 kip capacity WACO tower appeared on the verge of collapse and had to be augmented with a secondary tower and auxiliary posts. The compressive bracing in the long direction bowed or buckled about the time that concrete was being placed up to mid-height for the stems. The end frames of the 25 kip towers were aligned under the structure stems, while the long tower direction matched the structure stem spacing of 8'-0".

The 25 kip WACO tower units are supposed to have a safety factor of 2.5 at rated load. The end frames have a pair of horizontal structural tube struts in the upper 2 feet, and circular tube X-brace in the lower 4 feet, with all end connections welded to the structural tube legs. Studs welded to the inside upper and lower portions of the legs serve as connectors for the round tube cross bracing (also X type bracing) which is erected in the alternate direction to make up a square or rectangular tower. The cross bracing for the 25 kip towers look very similar to much lower capacity (11 kip) towers or to conventional painters scaffold bracing. In the cross bracing direction there is no horizontal top member to distribute transverse loading to compression and tension members.

Site investigation showed that the bottom of some of the towers in the long (8' -0") direction measured about 7'-11", 6 foot higher at the top of the lower tower unit the horizontal measurement was about 8'-l", and the top of the next tower unit measured less than 8'-0". These measurements were all supposed to measure very close to 8'-0", but more importantly the measurements were all supposed to be the same to insure plumb tower legs. It was noted that the top jack plates were fixed to the top cap with clamps, and that irregularities in leg alignment extended through the extension frames and into the upper jacks.

WACO 25 kip towers can normally be erected as described above because of the extremely loose tolerance at the leg to leg connections, because of loose connections at the cross brace midpoints and at the end connections, because of uneven foundations, because of bent or worn components and because of poor workmanship.

The site investigation also demonstrated that there is a large amount of looseness or tolerance in the leg to leg connections made with coupling pins, for the leg extensions, and for the jack connections. The jacks come in two configurations, either with swivel or with fixed plate connections. It was noted that fixed head jacks were used at the tops of the towers.

A WACO representative who visited the job site commented on the falsework in the following manner:

> End frames must be plumb, and uniform spacing between end frame legs as falsework erection progresses upward must be maintained by measuring or by use of gage blocks. The leg coupling pins furnished some moment capacity which probably prevented total collapse of the distorted tower.

Copies of photographs that follow depict potential alignment problems with WACO 25 kip towers,

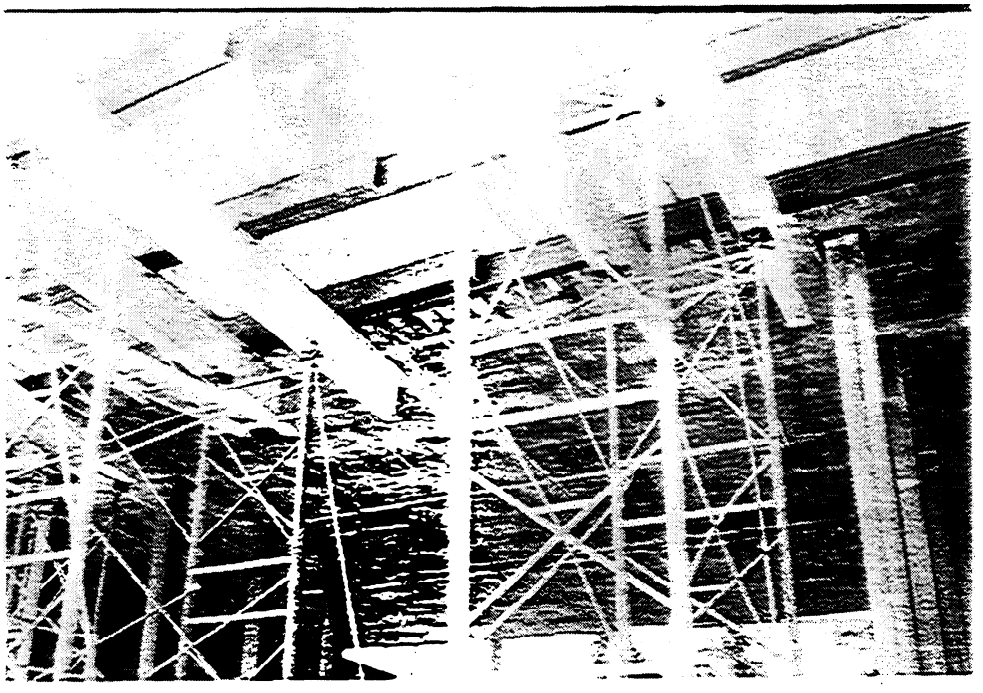

Typical tower configuration. Note bowed bracing.

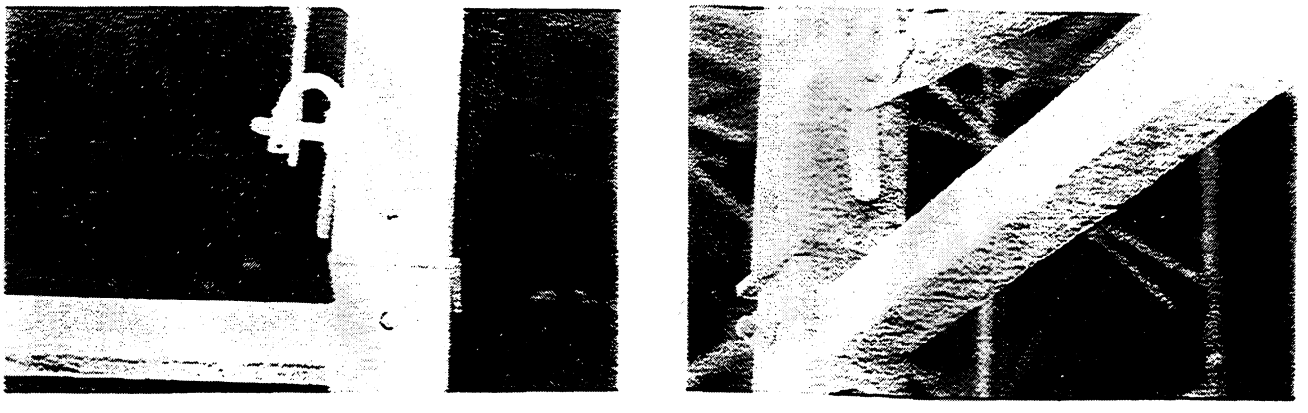

Offset tower legs

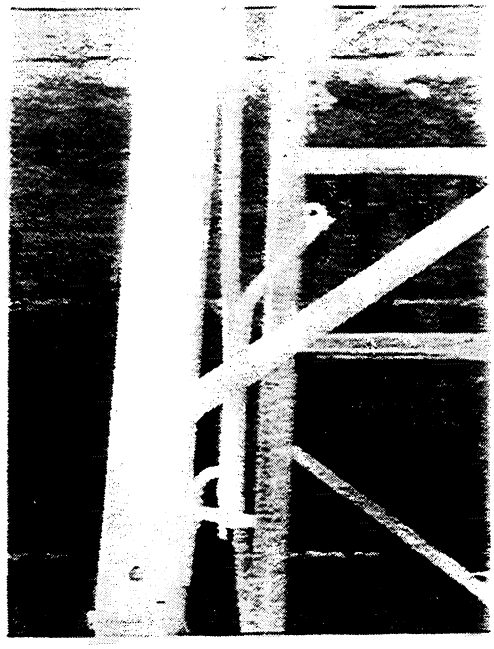

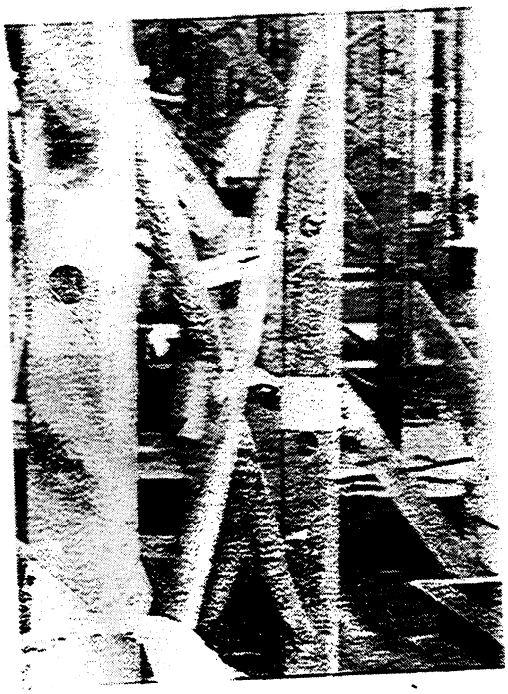

Bent or bowed X and cross bracing.

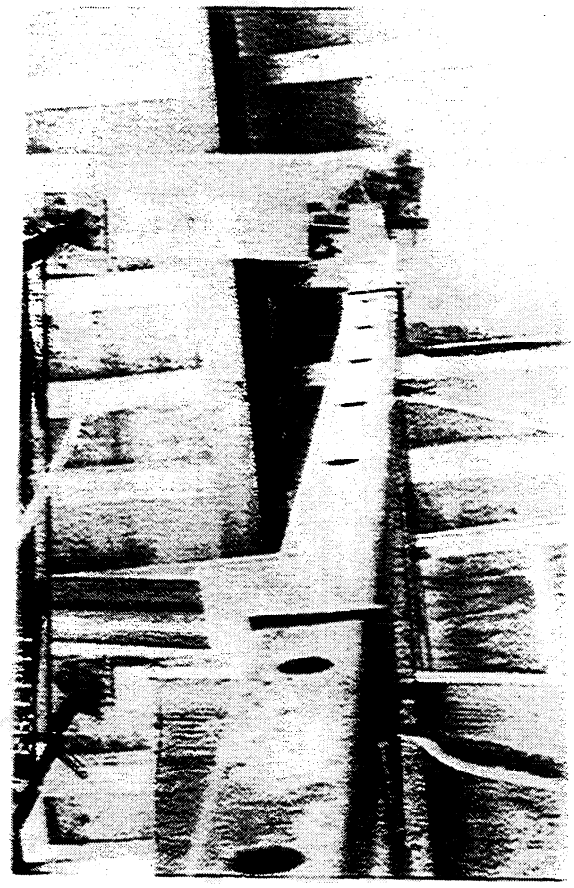

Tower leg misalignment

## THE SOLUTION - FOR WACO 25 KIP SHORING:

WACO towers have previously been tested and approved for use at a rated capacity of 25 kips maximum per leg with a safety factor of 2.5. Testing was performed with undamaged tower units erected properly.

If proper care is exercised in erecting WACO 25 kip towers in conformance with proper guidelines, circumstances similar to those pictured previously should not occur.

Guidelines for proper erection of WACO towers are outlined in the WACO publication titled "ERECTION INFORMATION FOR SHORE "X" TOWERS"; in Chapter 6 of the falsework manual under the heading of, "Intermediate strength shoring"; and in accordance with the instructions set forth in Chapter 9 of the falsework manual, with particular attention being given to the section titled "Steel" Shoring".

When falsework plans are received which include "WACO-SHORE 'X' 25 K" vertical shoring be sure to receive all pertinent information about the tower components, including the cross bracing sizes according to the WACO numbering system. If not furnished, request from the contractor the publication titled "ERECTION INFORMATION FOR SHORE "X" TOWERS".

When reviewing the falsework keep in mind that the tower capacity is reduced to 20 kips if swivel head jacks are to be used, that the jack extension is limited to 14 inches, that extension frames are to be braced, that leg loadings are not to have greater than 4 to 1 ratios, that additional bracing is required for tower heights greater than three frames, and that system stability must be considered. WACO 25 kip towers are not designed to resist lateral loadings, so alternate support will be required for wind and for 2% of the dead load or greater lateral loadings. When tower height is to be greater than 5 frames plus an extension a written statement that the shoring will carry the design loads will be required from the shoring manufacturer before the drawings are approved.

As soon as practical after WACO materials are received on the job review the components to ascertain that they conform to the falsework drawings and that they are undamaged.

When WACO tower falsework erection starts, become involved to confirm that the end frames and extensions are erected plumb, that cross bracing is the proper type and is in good condition, that tower legs are erected symmetrically without offsets at the connector locations, and that the entire assembly conforms to the intent of the falsework drawings and to WACO recommendations.

If there is some question as to whether components are truly WACO parts, require in writing, a statement from a WACO representative that all parts are as represented, and that the system is appropriate for the intended use.

Keep an eye on the falsework, not only when the towers are being loaded, but periodically thereafter because of possible eccentric loadings which can develop due to differential settlement between tower legs or between adjacent towers. Those legs which settle the least will be picking up additional load from the tower legs which settle more.

Attached are three sheets from WACO literature. The first two sheets (numbered -3- and -4-) describe tower parts and the last sheet lists some of the Steel Frame Shoring Safety Rules.

| | |
|---|---|
| SCREW ADJUSTMENTS | 4" TO 28" |
| EXTENSION | 1'- 0" TO 5'-0" |
| 1 TIER | 25,000 lbs./leg |
| 2 TIERS | |
| 3 TIERS | |
| 4 TIERS | |
| 5 TIERS | |
| 6 TIERS | CONSULT WACO ENGINEERING |

2.5:1 safety factor (average)

## ALLOWABLE WORKING LOADS

### GENERAL REQUIREMENTS

1.) For towers over 37'-4" high consult with Waco Engineering Department.

2.) Extensions: 1) 1'-0" to 2'-0" require side crossbraces only.
2) 3'-0", 4'-0" and 5'0" require side crossbraces and end cross braces on the face of the extension frame.

3.) Cross Braces: 1) For frame spacing of 2'-7-3/4" to 7'-0", Series #0244-XX, 20XX-00, 21XX-00, or 25XX-00 may be used.
2) For frame spacing over 7'-0" to 10'-0" inclusive, Series 25XX-00 braces must be used.
3) When 12'-0", 13'-0" or 15'-0" crossbraces are used in a tower, consult with the Waco Engineering Department.

4.) Adjustments: Screw adjustment is the sum total of the top and bottom screw adjustment.

5.) Bracing: For Stability during erection, 2" X 6" minimum bracing with #2570-02 nailing plates located at every third (3rd) frame up the tower, is recommended for towers over 3 frames high. Additional lateral bracing may be required due to wind, etc., and should be considered on a job to job basis.

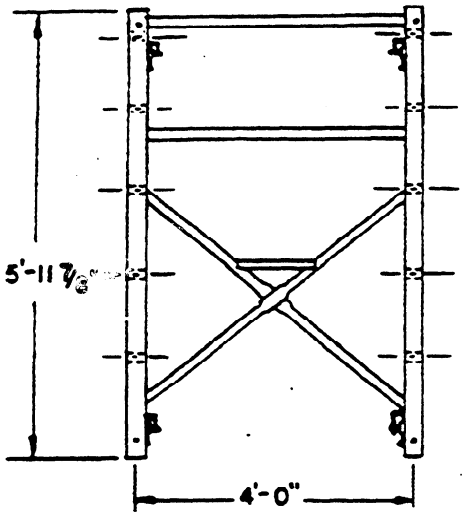


6' BASE FRAME
2525-00

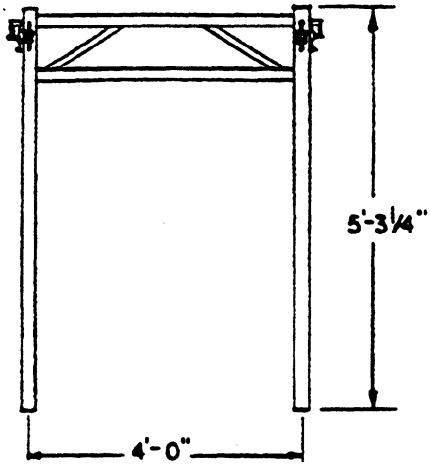


5' EXTENSION FRAME
2526-00

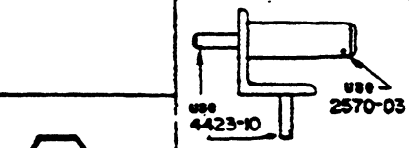


ADAPTER PIN
2533-00

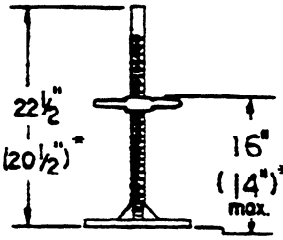


FIXED SCREW
2535-01
(2535-00)*

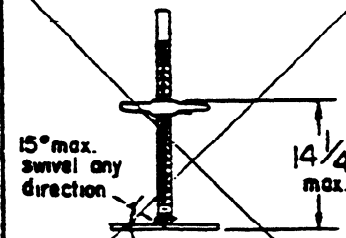


SWIVEL SCREW
2536-00

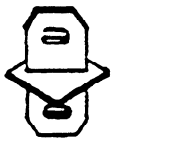

COUPLING PIN
2532-01

BASE PLATE
2537-00

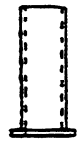

SCREW INSERT
2534-01

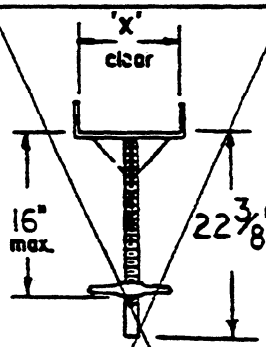


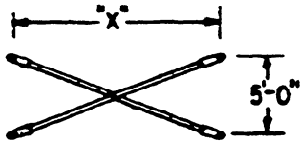


CROSSBRACES

EXTENSION FRAME
TOP "U" HEAD
2531-00

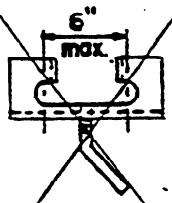


BEAM CLAMP
2547-01

| "X" | ASSY NO. |
|---|---|
| 6 1/2" | 2535-66 |
| 7" | 2535-67 |
| 8" | 2535-88 |

U-HEADS WITH SCREW

| "X" | 25X5-00 |
|---|---|
| 4' | 2545-00 |
| 6' | 2565-00 |
| 8' | 2585-00 |
| 10' | 2505-00 |

SEE ALSO PAGE 3

SHORE "X" 25,000#/LEG

# STEEL FRAME SHORING SAFETY RULES

*As Recommended by*

## SCAFFOLDING AND SHORING INSTITUTE

*(See Separate Scaffolding Safety Rules and Recommended Steel Frame Shoring Erection Procedure)*

Following are some common sense rules designed to promote safety in the use of steel frame shoring equipment. These rules are illustrative and suggestive only, and are intended to deal only with some of the many practices and conditions encountered in the use of steel frame shoring. The rules do not purport to be all-inclusive or to supplant or replace other additional safety and precautionary measures to cover usual or unusual conditions. They are not intended to conflict with, or supersede, any state, local, or federal statute or regulation; reference to such specific provisions should be made by the user. (See Rule II.)

I. **POST THESE SHORING SAFETY RULES** in a conspicuous place and be sure that all persons who erect, dismantle or use, shoring frames are aware of them.

II. **FOLLOW ALL STATE, LOCAL AND FEDERAL CODES, ORDINANCES and REGULATIONS** pertaining to shoring.

III. **INSPECT ALL EQUIPMENT BEFORE USING.** Never use any equipment that is damaged.

IV. **A SHORING LAYOUT**—Shall be available on the jobsite at all times.

V. **INSPECT ERECTED SHORING AND FORMING:**
a. Immediately prior to pour - b. During pour - c. After pour until concrete is set.

VI. **CONSULT YOUR SHORING EQUIPMENT SUPPLIER WHEN IN DOUBT.** Shoring is his business. NEVER TAKE CHANCES.

---

A. **USE MANUFACTURER'S RECOMMENDED SAFE WORKING LOADS CONSISTENT WITH** the type of **SHORING FRAME** and the height from supporting sill to formwork.

B. **DO NOT EXCEED THE SHORE FRAME SPACINGS OR TOWER HEIGHTS** as shown on the shoring layout.

C. **SHORING LOAD SHOULD BE CARRIED ON LEGS.** Consult your shoring supplier for **SHORING FRAMES** that are designed for taking loads on top horizontal.

D. **IF MOTORIZED CONCRETE EQUIPMENT** is to be used, be sure that the shoring layout has been designed for use with this equipment and such fact is noted on the layout.

E. **PROVIDE AND MAINTAIN A SOLID FOOTING** to distribute maximum loads properly.

F. **USE ADJUSTMENT SCREWS** to adjust to uneven grade conditions.

G. **USE ADJUSTMENT SCREWS** to level-off, to accurately position the falsework and for easy stripping.

H. **KEEP SCREW EXTENSIONS** to a minimum for maximum load carrying capacity (follow manufacturer's recommendation on screw extension).

I. **MAKE CERTAIN THAT ALL ADJUSTMENT SCREWS** are firmly in contact with sills, formwork and frame legs.

J. **PLUMB AND LEVEL ALL SHORING FRAMES** as the erection proceeds. **DO NOT** force braces on frames to fit—level the shoring towers until proper fit can be made easily. **CHECK PLUMB AND LEVEL OF SHORING TOWERS** just prior to pour.

K. **FASTEN ALL BRACES SECURELY.**

L. **TIE HIGH TOWERS OF SHORING FRAMES TOGETHER** with sufficient braces to make a rigid, solid unit (see manufacturer's recommendations).

M. **EXERCISE CAUTION** in erecting or dismantling free standing shoring towers to prevent tipping.

N. **DO NOT CLIMB CROSS BRACES.**

O. **AVOID ECCENTRIC LOADS ON U-HEADS,** top plates and similar members by centering stringers on those members.

P. **USE SPECIAL PRECAUTIONS** when shoring from or to sloped surfaces.

Q. **USE LUMBER STRESSES** as shown on layout and consistent with age, type and condition of the available lumber to be used. Use only lumber that is in good condition.

R. **RESHORING PROCEDURE SHOULD BE APPROVED BY A QUALIFIED ENGINEER.**

S. **DO NOT REMOVE BRACES OR BACK-OFF ON ADJUSTMENT SCREWS** until proper authority is given.

PILE COLLARS

A field test was performed to determine working load capacities of a pile collar. The pile collar depicted below, which emulates testing and proposed usage, was made up of two individual components consisting of a friction collar and a yoke assembly. The yoke assembly and the friction collar were interconnected by two 1 l/4 inch threaded coil rods. The friction collar was fabricated by the Gayle Manufacturing Company

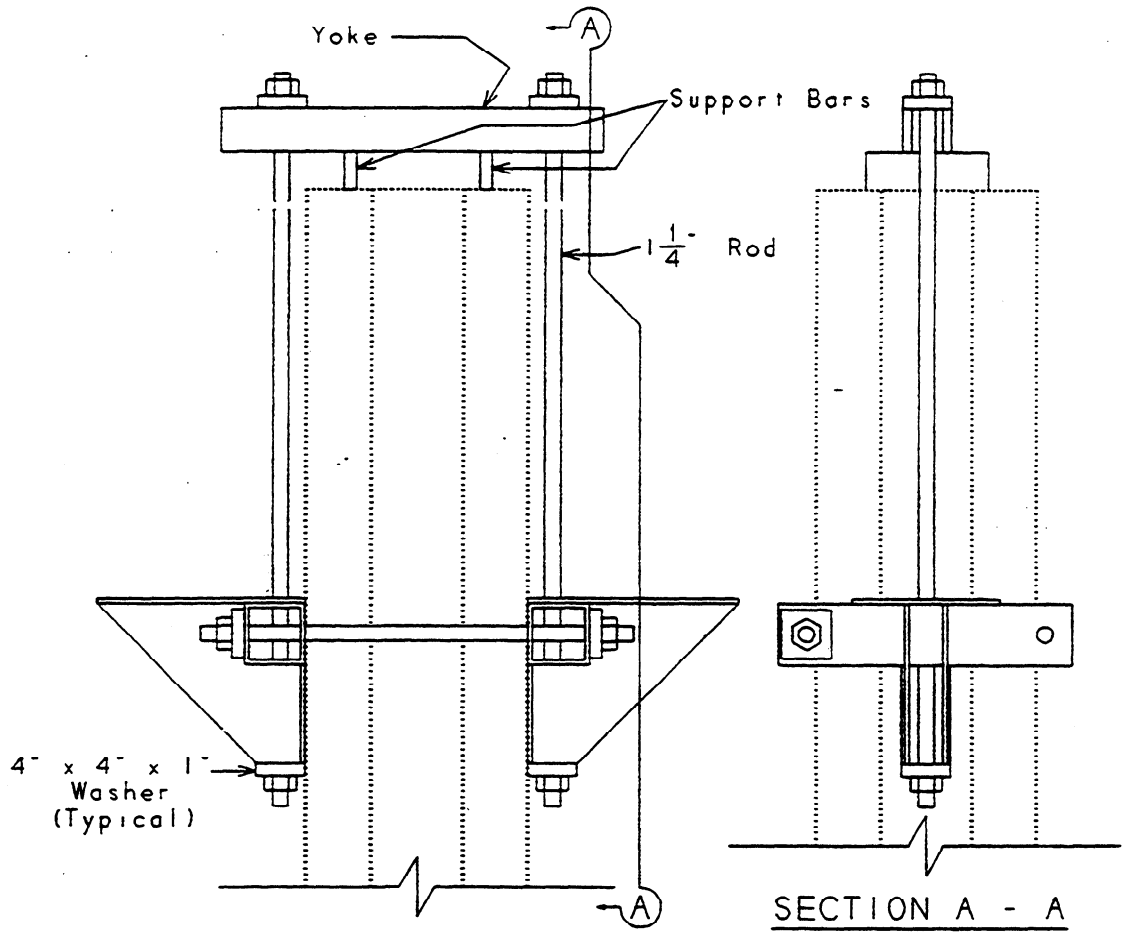


The friction collar consisted of specially manufactured brackets welded to 5" x 5" x 3/8" structural tubes, The brackets were placed on opposite sides of a pile and were connected by threaded coil rods of 1 l/4 inch diameter which ran through the structural tubes near their ends. The threaded rods were torqued to 1,000 Ft-Lbs to provide the desired frictional resistance.

Additional support for the friction collar was provided by a yoke assembly mounted atop the pile. The yoke assembly consisted of double steel bars which were supported on steel bars and which carry a 1 l/4" threaded rod on either side of

the pile such that the threaded rods extend through the structural tubes of the friction collar.

The test was performed with a pair of calibrated jacks to evaluate the pile collar capacity, up to desired non-destructive loadings, for the following conditions:

a. friction collar alone.

b. friction collar in combination with the yoke assembly.

C. to determine the amount of pile collar slip with load only on one side of the pile collar.

The specific method used for evaluating the pile collar and the observations made under the various loading conditions during the testing were as follows:

a. The test load was applied simultaneously with the jacks to both sides of the friction collar to twice the desired working load. Approximately 1/8 inch of friction collar slippage occurred during this loading condition.

b. While the load in the jacks was maintained, the rods connecting the yoke assembly to the friction collar were tightened to a snug fit. The loads in both jacks were again simultaneously increased to twice the desired final working load capacity. A maximum additional l/8 inch slip of the friction collar occurred.

c. To ascertain the amount of differential slip for application of load on one side of the friction collar only the load from one jack was completely removed. No significant movement of the friction collar was noticed as the load was being removed.

The total slip of the pile collar components under full test loading was no more than l/4 inch, and no discernable slip differential was noticed when load was removed from one side of the test pile while the maximum test load was held on the opposite side. Throughout the testing procedure no pile damage was noticed at the location of the friction collar due to slip.

PERMITTED USE:

The purpose of the pile collar is to permit erection of falsework on the friction collars before the piles for flat slab bridges are cut to grade. The falsework will normally be set on sand jacks which will be mounted atop the friction

collar brackets. Once the piles are cut to grade the yoke assemblies may be installed atop the pile.

The yoke assemblies furnish additional support to the friction collar for carrying the reinforcing and concrete load of the superstructure and will limit the total amount of friction collar slip.

The Office of Structure Design has determined that the working load values tabulated below will not overstress the Caltrans standard 15" octagonal concrete piles provided the unsupported length of piling will be no longer than 18 feet.

Working loads, including an appropriate safety factor of 2, are indicated in the following table:

| Allowable Working Load Per Bracket (per side of pile) | Friction Collar Only | Friction Plus Yoke |
|---|---|---|
| | 20,000 Pounds | 40,000 Pounds |

The threaded rods of the friction collar are to be torqued to 1,000 Ft-Lbs and are to remain torqued tight until the supported falsework is removed. All threaded rods must have a minimum safety factor of 2 for the intended maximum loads to be used.

The steel yoke bars should be no smaller than 3/4" x 3 l/2". The yoke assembly should be supported on the piling in such a manner that it will not interfere with the bar reinforcing of the pile, slab, or cap and will not over-stress the concrete in the piles. The distance between the top of pile and the yoke bars should provide satisfactory clearance above the bottom mat and cap reinforcing. No revision to the structural reinforcing should be made to accommodate support bars or other yoke components. Distortion to the pile reinforcing spiral to accommodate the yoke components should be kept to a minimum. The vertical threaded rods shall have a minimum safety factor of 2 for the intended maximum loads to be supported.

The support bars for the yoke are to be located a minimum of 3 inches from the edges of the concrete piles, and are to be supported on smooth undamaged pile tops, or alternately on dry pack or similar hard concrete surfacing. This requirement is essential to keep local compressive stresses on the top of the piling as low as possible.

It should be anticipated that friction collar slip will be slight after the load transfers to the yoke assembly.

To facilitate removal of the falsework, sand jacks will generally be installed atop the friction collars. Grease may be placed on that portion of the threaded rod to be embedded in the concrete.

The threaded rods shall be removed as part of the falsework removal and the remaining holes in the structure shall be finished in the usual manner. Also, any damage to the piling may be corrected in the usual concrete finishing manner.

Friction collar assemblies will be manufactured by the Gayle Manufacturing Company. A certification of manufacture including working load values should be obtained through the contractor in the usual manner.

The pile collars may be identified by the CCM stenciled on the friction collars.

# 100K Hi-Cap BRIDGE SHORING

Hi-Cap Shoring System (Aluma-Systems 100K Hi-Cap Bridge Shoring) is approved for use up to a height of 100 feet. This approval is based on the results of a three dimensional computer analysis. This system will initially be furnished by the Burke Company, a subsidiary of Aluma-Systems, on a rental basis.

Falsework plans for 100K Hi-Cap Bridge Shoring should include engineering data supplied from the manufacturer. Such data should include, as a minimum, 1 sheet approximately 24" x 36" numbered CALBR-03, along with thirty-three 8 l/2" x 11" sheets dated March 93, titled "100 K Hi-Cap BRIDGE SHORING", numbered 1 of 33 through 33 of 33.

Charts on sheets 4 of 33, 5 of 33 and 6 of 33 are to be used to determine safe leg loads and allowable horizontal deflection at the tops of the towers. The maximum leg loads derived from the charts include consideration for leg load ratios, tower height, jackscrew extension length, external bracing, and limiting top of tower deflection. The Caltrans controlling horizontal load on the tower assembly, along with a safety factor of 2.5 for the tower leg loadings is included in the load charts. Controlling assumed horizontal loads transmitted to falsework components above the jack will need to be additionally considered. The charts are for tower heights up to 100 feet including jackscrew extensions for frame spacings of 6, 8, and 10 feet and up to 60 feet for frame spacings of 4 feet.

The chart on sheet 4 of 33 show curves which relate "Maximum Tower Leg Capacity" to "Tower Height" for four different levels of bracing. For each of the bracing levels a horizontal force will need to be resisted by external bracing. The horizontal force H required to be restrained is represented by the equation H = H(s) + xxxx pounds, where H(s) equals the applied horizontal force above the top of the jack screws and xxxx is in increments of 2,000 pounds for the four levels of bracing.

The horizontal bracing force will normally be accounted for with cables attached to the falsework system above the top of the tower jacks. Applicable vertical load components of the cable bracing must be included in the leg loadings.

The chart on sheet 5 of 33 contains "Capacity Reduction Factors" for towers having unequal leg loads. The chart depicts two curves which relate the "Capacity Reduction Factor" to the leg load ratio of "P(min)/P(max)" dependent upon the amount of jack extension to be used. The leg load

values derived from the "Maximum Design Leg Load" chart on sheet 4 of 33 are to be multiplied by the appropriate "Capacity Reduction Factor" as interpolated from the curves on sheet 5 of 33.

Plan sheet 6 of 33 contains a graph relating the "Horizontal Bracing Force" to the total allowable "Horizontal Deflection" at the top of the tower for various height configurations and bracing levels of the towers. It is possible to use this graph to determine the horizontal bracing force needed for a specified tower height and a given horizontal deflection at the top of the tower (the horizontal tower deflection might represent cable stretch for example).

Plan sheets 8 of 33 through 16 of 33 include example problems regarding tower stability. The example problems follow the format of example problems 8 and 9 currently in Section D of the Falsework Manual.

The remainder of the plan sheets include diagrams and section property descriptions of the various tower components.

End frame and cross bracing configuration is in the pattern of a "Z" atop a reversed "Z". This bracing pattern should distinguish Hi-Cap shoring towers from other previously approved heavy duty towers.

Temporary bracing may be connected to the towers at the locations of the coupling pins for erection stability only. Temporary bracing shall not impart loads to the towers at the time the legs are loaded. Design bracing for the loaded condition used to furnish the horizontal bracing force must be connected above the tops of the upper jack screws. Temporary bracing should be adequately slackened at the time that the loaded condition bracing is installed.

Tower foundations will have to be designed level and provide for uniform settlement under all legs of a tower.

100 K Hi-Cap Bridge Shoring towers may be used adjacent to traffic since the section modulus of a tower leg is 10.1 inches cubed which exceeds the minimum section modulus provisions in Section 51-l.O6A(3), Special Locations, of the Standard Specifications. The Falsework Manual provisions included in Section 6-1.09, Heavy Duty Shoring Systems, apply to 100 K Hi-Cap Bridge Shoring except as otherwise provided for herein.

A list of current engineering and distribution centers for Aluma-Systems is included in Falsework Memo No. 13 "Aluma-Frame Shoring Systems".

## CONCRETE PADS

Appropriately designed portable concrete slabs may be used as falsework pads.

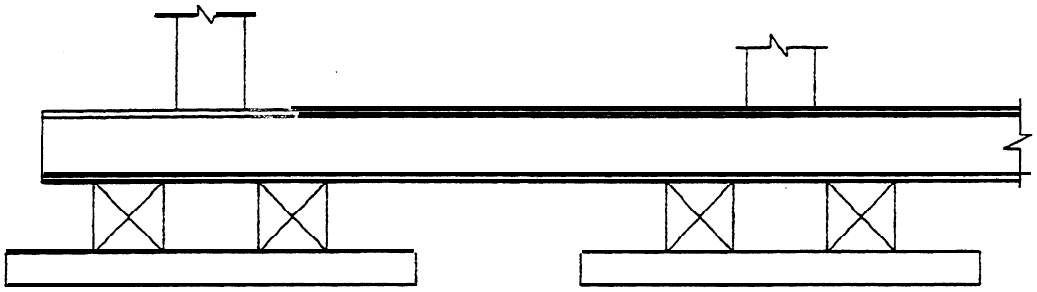

One portable concrete slab, 6 feet by 4 feet by 5 l/2 inches in depth, reinforced with a bottom mat of welded wire mesh, as depicted below has been reviewed as a substitution for timber pads.

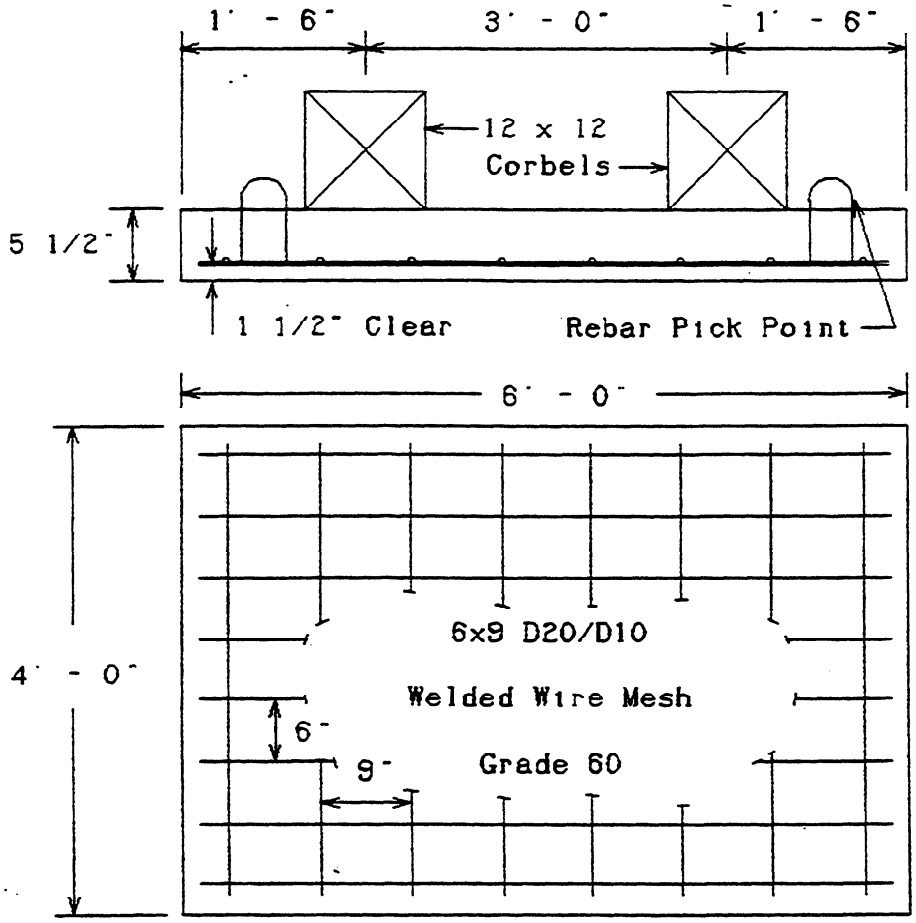

Design and analysis were completed using text-book load factor design for concrete. The concrete pads meet the criteria of wood pads as outlined in Section 7-2.03B, "Pad Analysis at Exterior Posts", of the falsework manual.

PERMITTED USE

Concrete pads which are fabricated as indicated above may be used in lieu of timber pads for falsework. Concrete strength shall not be less than f'c = 3,500 psi.

The reinforcing welded wire mesh is to be grade 60. The concrete pad is to be fabricated with the reinforcing mat 1 l/2" clear above the base of the pad and with the 9" spacing placed in the long direction of the pad.

The location of the corbels on the concrete pads is critical because of flexural considerations. Two corbels per concrete pad shall be located only as shown in the drawing on the previous page. Corbels shall be long enough to extend the full width of the concrete pads.

Design soil bearing pressure for these portable concrete pads is not to exceed 4,000 psf.

A certificate of compliance from the pad fabricator should be obtained for concrete pads to be used on the project. The certificate of compliance should contain the following information:

1 . It should certify that the concrete meets the compressive strength requirements.

2 . It should certify that the steel mesh is of the type and quality specified.

3 . It should certify that the pad is fabricated as indicated in the sketch.

4 . It should bear the seal of the design engineer.

5 . It should indicate how the individual pads may be identified.

**Falsework Memo 18 blank**

**Falsework Memo 19 blank**

State of California Business, Transportation and Housing Agency

# Memorandum

**To:** ALL HOLDERS OF THE FALSEWORK MANUAL **Date:** May 2, 1994

From: **DEPARTMENT OF TRANSPORTATION**
**DIVISION OF STRUCTURES**
**OFFICE OF STRUCTURE CONSTRUCTION**

**Subject:** PIPE FRAME SHORING

Pipe Frame Shoring as furnished by Patent Construction Systems has been reviewed for general use by the Falsework Section in Sacramento.

Effective May 2, 1994 the product Patent Shoring as furnished by Patent Construction Systems may be used in the manner prescribed as outlined in Sections 6-l.01, "Introduction", through Section 6-1.03, "Investigate Foundation Supports" of the Falsework Manual. All are reminded that the previously approved pipe frame shoring was the Superior Shoring System.

F.K. YANAMURA, Chief
Office of Structure Construction

# STRUCTURAL COMPOSITE LUMBER

## Introduction

In recent years the increasing cost of timber and timber products has led to the development of various substitute materials. One such product is structural composite lumber, which is marketed commercially as an engineered wood product intended for use as a structural building material. Structural composite lumber (SCL) has been used for general building purposes, including limited use in falsework construction. The use of SCL as a falsework material is expected to increase in future years.

This memo sets forth Division of Structures policy with respect to the use of SCL as a falsework material on California highway construction projects.

## General Information

Structural composite lumber is a natural wood product in which the harvested logs are debarked and either peeled or stranded. The resulting veneers or strands are then coated with adhesives and compressed to permanently bond the wood fibers. The finished product is a stronger, straighter and more homogeneous material than conventional lumber.

A recently issued ASTM specification (ASTM Designation: D 5456-93) covers test specimen qualification procedures, testing methods and procedures, evaluation of test results, and assignment of design values. The ASTM specification covers composite lumber products which meet the following definitions:

*Structural composite lumber* (SCL) is either laminated veneer lumber, laminated strand lumber or parallel strand lumber intended for structural use.

*Laminated veneer lumber* (LVL) is a composite of wood veneer sheet elements with wood fibers primarily oriented along the length of the member. Veneer thickness shall not exceed 0.25 inches.

*Laminated strand lumber* (LSL) is a composite of wood strand elements having a least dimension of approximately l/32 inch and a length of approximately 6 to 12 inches. The wood fibers in each strand are oriented primarily along the length of the member.

*Parallel strand lumber* (PSL) is a composite of wood strand elements with wood fibers primarily oriented along the length of the member. The least dimension of the strands shall not exceed 0.25 inches and the average length shall be a minimum of 150 times the least dimension.

## STRUCTURAL COMPOSITE LUMBER

Typically, NDS dimension lumber sizes (2x4's, 4x4's, 2x6's, etc.) are manufactured from LVL composites, while PSL composites are used for the NDS timber sizes (5" x 5" and larger).

Allowable working stress values are obtained from strength tests on material specimens. Since SCL is a more uniform product than natural wood, the ASTM adjustment factors from which allowable working stresses are derived are considerably lower than the corresponding factors for wood. These lower adjustment factors result in higher design working stress values than are allowed for even the best grades of lumber.

Design stress values are a function of grade and wood species, and in some cases the depth and orientation of the member as well. The grade (quality) of a particular lot of material is determined by the modulus of elasticity. (Higher modulus values generally correlate with higher allowable design values.)

The ASTM specification covers procedures for evaluating specific material properties and for determining design values, including bending strength and stiffness, tensile strength parallel to the grain, compressive strength parallel and perpendicular to the grain, and horizontal and vertical shear, along with procedures for maintaining quality assurance in manufacturing. However, the specification expressly <u>excludes</u> determination of design values for connections.

### <u>Administration</u>

Structural composite lumber is not covered by Section 51-1.06 of the Standard Specifications. However, the use of SCL will be permitted for falsework construction, as provided herein.

Structural composite lumber may be used for horizontal members; for vertical members except as noted in the following paragraph; for framing that supports sloping girders, deck overhangs and similar locations where dimension lumber would customarily be used; and for miscellaneous purposes such as cribbing, blocking and wedging.

Structural composite lumber may <u>not</u> be used as a post or column, or as diagonal bracing, in timber bents or towers.

Any intended use of structural composite lumber shall be indicated by a note on the falsework drawings. The note shall clearly identify the SCL members by grade (E value), species and type (e.g., 2.0E DF *Trade Name* LVL, or similar notation).

## STRUCTURAL COMPOSITE LUMBER

Falsework drawings showing the use of SCL shall be accompanied by a technical bulletin, product data sheet, or similar publication issued by the manufacturer of the product. The technical data shown shall include tabulated working stress values for normal load duration and dry service conditions.

The falsework design shall be based on working stress values that are no higher than the manufacturer's tabulated working stress values. The tabulated values shall be adjusted as recommended by the manufacturer for member size or orientation; however, the tabulated values shall not be decreased for wet service conditions nor increased for short load duration.

When used as a horizontal load-carrying member, the calculated deflection due to the weight of concrete shall not exceed l/240 of the span.

Each piece of structural composite lumber shall be marked for identification. Identification markings shall show the wood species, material grade, manufacturer's name or identifying symbol, and date of manufacture or lot number.

The contractor shall furnish a certificate of compliance pursuant to the provisions in Section 6-1.07, Certificate of Compliance, of the Standard Specifications for each delivery of structural composite lumber to the work site. The certificate shall be signed by the supplier who furnishes the material. In the case of used material, the certificate shall be signed by the supplier from whom the contractor originally purchased the material. In either case, the certificate shall reference the contract number and shall identify the covered material by manufacturer and date of manufacture or lot number, or some other positive means of identification. In addition, the certificate shall state that:

- Qualification sampling and testing, test evaluation and assignment of design working stress values, independent inspection and quality assurance for the covered materials comply in all respects with ASTM Designation: D 5456.

- The covered materials are manufactured in a plant and by a process approved by _____ (Insert one of the following: National Evaluation Service, Inc.; Building Officials and Code Administrators International; ICBO Evaluation Service, Inc.; or Southern Building Code Congress International, Inc.)

Except as otherwise provided in this memo, all specification requirements and all Falsework Manual policy and procedures governing the use of timber falsework members shall apply to the use of structural composite lumber.

**Index to Appendix D - Example Problems**


| Problem | Date Issued | Subject |
|---|---|---|
| 1 | | Capacity of Bolted Joints |
| 2 | | Capacity of Bolted Joints |
| 3 | | Adequacy of Diagonal Bracing: Single Tier Framed Bent - Nailed Connections |
| 4 | | Adequacy of Diagonal Bracing; Single Tier Framed Bent - Bolted Connections |
| 5 | | Adequacy of Diagonal Bracing: Multi-Tiered Framed Bent |
| 6 | | Adequacy of Diagonal Bracing: Multi-Tiered Framed Bents |
| 7 | | Wind Loads on Conventional Falsework |
| 8 | | Wind Loads on Heavy-Duty Falsework, and Horizontal 2% Dead Load |
| 9 | | Cable Bracing to Resist Horizontal Design Load |
| 10 | | Horizontal Forces in the Longitudinal Direction |
| 11 | | Individual Falsework Pads |
| A | 05/92 | Symmetrical Loading |
| B | 09/92 | Asymmetrical Loading |
| 12 | 05/92 | Continuous Pad - Individual Corbels |
| 13 | 05/92 | Continuous Pad - Multiple Corbels |
| 14 | | Adequacy of Timber Pile Bent Design |
| A | 05/92 | (Type I Bent) |
| B | 05/92 | (Type II Bent) |
| C | 05/92 | (Type III Bent) |
| 15 | | Failure of Pile to Attain Required Penetration |
| A | 05/92 | Type I Bent |
| B | 05/92 | Type II Bent |
| 16 | 06/95 | Bi-Axial Bending |
| 17 | 08/95 | Internal Cable Bracing |

# EXAMPLE NO. 1
## CAPACITY OF BOLTED JOINTS

THE CONTRACTOR'S FALSEWORK PROPOSAL SHOWS THE FOLLOWING:

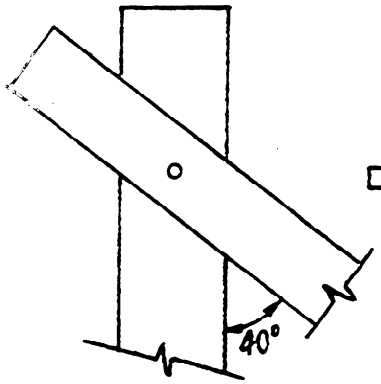


ELEVATION VIEW

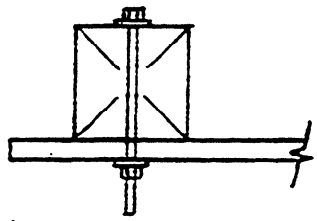

TOP VIEW

| | |
|---|---|
| POST | 12×12 ROUGH |
| DIAGONAL BRACE | 2×8 ROUGH |
| CONNECTOR | 1" Ø BOLT |

WIND LOAD CONTROLS HORIZONTAL DESIGN FORCE

## DETERMINE THE CONNECTION CAPACITY

1. CHECK BOLT CAPACITY IN THE SIDE MEMBER (2×8) FROM SECT 4-3.02 OF FW MANUAL, ENTER CHART FOR A MEMBER = 2 × THICKNESS OF SIDE MEMBER.

   2×2" = 4" P = 4610# (SIDE MEMBER IS AXIALLY LOADED ∴ PARALLEL TO GRAIN)

   FOR SINGLE SHEAR, USE 75% OF TABULATED VALUE. 0.75 × 4610 = 3503#

2. CHECK BOLT CAPACITY IN THE MAIN MEMBER (12×12) ENTER CHART FOR A MEMBER = 12"

   P = 5080# Q = 2710# SINCE THE LOAD ACTS AT A 40° ANGLE TO THE MAIN MEMBER GRAIN, HANKINSON'S FORMULA IS USED TO DETERMINE THE ALLOWABLE VALUE.

$$R = \frac{PQ}{P\sin^2\theta + Q\cos^2\theta} = \frac{5080(2710)}{5080\sin^2 40° + 2710\cos^2 40°} = 3732\#$$

   FOR SINGLE SHEAR, USE 75%. 0.75 × 3732 = 2799#

3. 2799# < 3503# ∴ MAIN MEMBER CONTROLS

4. APPLY 1.33 LOAD DURATION FACTOR SINCE THE WIND LOAD CONTROLS THE HORIZONTAL DESIGN FORCE. SEE SECT. 4-3.06 OF FW MANUAL.

   CONNECTION CAPACITY = 1.33 × 2799# = 3723#

# EXAMPLE NO. 2
## CAPACITY OF BOLTED JOINTS

THE CONTRACTOR'S FALSEWORK PROPOSAL SHOWS THE FOLLOWING:

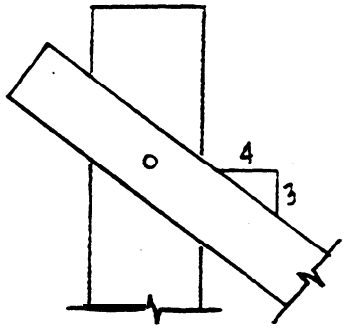


ELEVATION VIEW

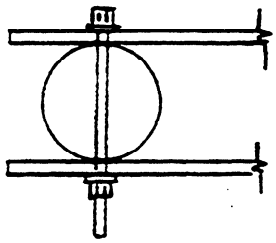

TOP VIEW

| | |
|---|---|
| POST | 12" ϕ POLE |
| DIAGONAL BRACE | 2 EA 2×8 S4S |
| CONNECTOR | 3/4" ϕ BOLT |

2% DEAD LOAD CONTROLS HORIZONTAL DESIGN FORCE

## DETERMINE THE CONNECTION CAPACITY

1. CHECK BOLT CAPACITY IN THE SIDE MEMBER (2×8) FROM SECT. 4-3.02 OF FW MANUAL, ENTER CHART FOR A MEMBER 2× THICKNESS OF SIDE MEMBER.

   2×1.5" = 3" P = 2630# (SIDE MEMBER IS AXIALLY LOADED, ∴ PARALLEL TO GRAIN)

   FROM SECT 4-3.02 OF FW MANUAL, CONSIDER 3 MEMBER JOINT TO BE 2 INDEPENDENT 2 MEMBER JOINTS AND USE 0.75 FOR SINGLE SHEAR.

   $2 \times 0.75 \times 2630 = \underline{3945\#}$

2. CHECK BOLT CAPACITY IN THE MAIN MEMBER (12" POLE)

   EQUIVALENT SQUARE SECTION WIDTH $= \sqrt{\pi R^2} = \sqrt{\pi(6^2)} = 10.6"$

   FROM SECT. 4-3.02 OF FW MANUAL, FOR MEMBER SIZES 9½" THRU 12", P = 2860# Q = 1640#

   USE HANKINSON'S FORMULA

   $$\theta = \tan^{-1}\frac{4}{3} = 53.13^\circ \qquad R = \frac{2860(1640)}{2860\sin^2 53.13^\circ + 1640\cos^2 53.13^\circ} = 1938\#$$

   CONSIDER 3 MEMBER JOINT AS 2 INDEPENDENT 2 MEMBER JOINTS

   $2 \times 0.75 \times 1938 = \underline{2907\#}$

3. 2907# < 3945# ∴ MAIN MEMBER CONTROLS

4. CONNECTION CAPACITY = 1.25 × 2907# = 3634#

   2% DEAD LOAD CONTROLS HORIZONTAL DESIGN FORCE, ∴ 1.25 LOAD DURATION FACTOR

# EXAMPLE NO. 3

## ADEQUACY OF DIAGONAL BRACING
## SINGLE TIER FRAMED BENT - NAILED CONNECTIONS

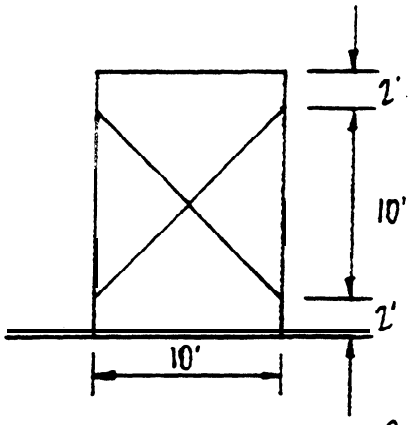


2% DEAD LOAD = 1900#
WIND LOAD = 1800#

POSTS: 12 × 12 ROUGH

DIAGONAL BRACES: 2 × 8 S4S

CONNECTORS:
- BRACE TO POST — 10-20d NAILS
- INTERSECTION OF BRACE — 4-16d NAILS

IS THE BRACING SYSTEM ADEQUATE?

1. DETERMINE THE STRENGTH OF THE CONNECTION BETWEEN BRACE AND POST.

REF. N.D.S. TABLE 8.8C

20d COMMON WIRE NAILS
LENGTH = 4"
DIAMETER = 0.192"

SPECIES GROUP II: LATERAL DESIGN VALUE = 139#
FOR MINIMUM PENETRATION = 0.192 × 11 = 2.11"

LOAD CAPACITY = 10 × 139 × 1.25 = 1738#

(APPLY 1.25 LOAD DURATION FACTOR TO CONNECTION CAPACITY SINCE 2% DEAD LOAD CONTROLS THE HORIZONTAL DESIGN FORCE.)

PENETRATION = 4" − 1.5" = 2.5" > 2.11" OK

2. DETERMINE THE STRENGTH OF THE DIAGONAL BRACE IN TENSION

$F_T = 1200\,PSI\,(1.5" \times 7.25") = 13050\#$

3. DETERMINE THE STRENGTH VALUE OF THE TENSION MEMBERS

13050# > 1738# ∴ CONNECTION CONTROLS TENSION

4. CALCULATE THE HORIZONTAL COMPONENT OF THE STRENGTH VALUE FOR THE TENSION MEMBERS.

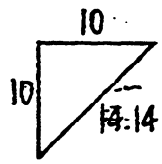


$T = 1738 \times \frac{10}{14.14} = 1229\#$

5. DETERMINE THE STRENGTH OF THE DIAGONAL BRACES IN COMPRESSION

CONNECTION = 1138# FROM ABOVE

ALLOWABLE COMPRESSION IN 2×8.

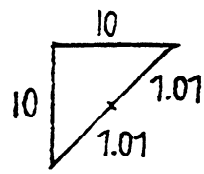


CHECK ADEQUACY OF CONNECTION TO REDUCE UNSUPPORTED LENGTH OF COMPRESSION MEMBER.

REF: N.D.S. TABLE 8.8B
ASSUME SPECIFIC GRAVITY G = 0.51
16d COMMON NAILS
WITHDRAWAL CAPACITY = 42#/INCH OF PENETRATION

CAPACITY OF 4 EA 16d NAILS = 4 × 42# × 1.5" × 1.25 = 315# > 250# OK

LOAD DURATION

SEE FW MANUAL SECT. 5-1.03

$$\frac{480000}{(L/d)^2} = \frac{480000}{(1.07 \times 12/1.5)^2} = 150 \text{ PSI}$$

150 PSI (1.5 × 1.25) = 1631#

6. DETERMINE THE STRENGTH VALUE OF THE COMPRESSION MEMBERS

1631# < 1138# ∴ 2×8 BRACE CONTROLS COMPRESSION

ALLOW ½ THEORETICAL STRENGTH FOR COMPRESSION VALUE ½ × 1631 = 816#

7. CALCULATE THE HORIZONTAL COMPONENT OF THE STRENGTH VALUE FOR THE COMPRESSION MEMBER.

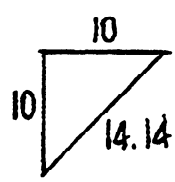


$$C = 816 \times \frac{10}{14.14} = 577\#$$

8. CALCULATE THE TOTAL RESISTING CAPACITY OF THE DIAGONAL BRACING SYSTEM.

TOTAL = C + T = 577# + 1229# = 1806#

RESISTING CAPACITY, 1806# < COLLAPSING FORCE, 1900#

BRACING SYSTEM IS INADEQUATE

# EXAMPLE NO. 4

## ADEQUACY OF DIAGONAL BRACING
## SINGLE TIER FRAMED BENT - BOLTED CONNECTIONS

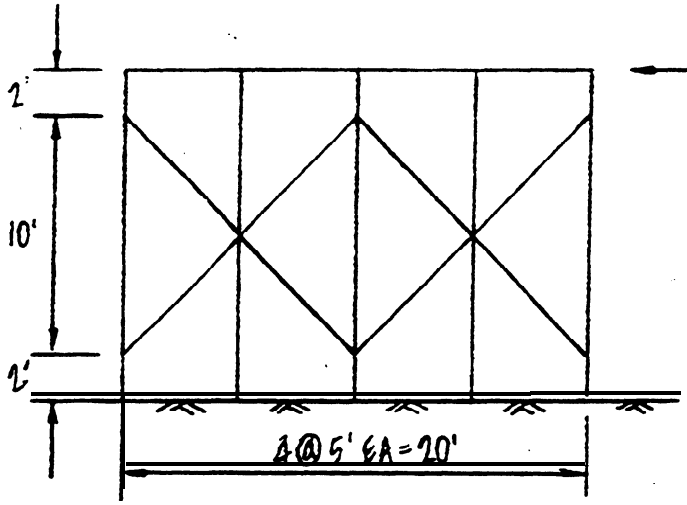


2% DEAD LOAD = 4000#
WIND LOAD = 4200#

POSTS 12×12 ROUGH

DIAGONAL BRACES 2×8 S4S

CONNECTORS 3/4" ϕ BOLT
ALL BOLTS IN SINGLE SHEAR

IS THE BRACING SYSTEM ADEQUATE?

1. DETERMINE THE STRENGTH OF THE CONNECTION BETWEEN BRACE AND POST

CHECK BOLT CAPACITY IN THE SIDE MEMBER

MEMBER SIZE = 2 × 1.5" = 3" P = 2630# × 0.75 = 1973#

CHECK BOLT CAPACITY IN THE MAIN MEMBER

MEMBER SIZE = 12" P = 2860# Q = 1640#

HANKINSON'S FORMULA: $R = \dfrac{2860(1640)}{2860\sin^2 45° + 1640\cos^2 45°} = 2085\# \times 0.75 = 1564\#$

1564# < 1973# ∴ MAIN MEMBER CONTROLS CONNECTION CAPACITY

WIND LOAD CONTROLS, ∴ APPLY 1.33 LOAD DURATION FACTOR AS PER SECT. 4-3.06.

CONNECTION CAPACITY = 1.33 × 1564# = 2080#

2. DETERMINE STRENGTH OF DIAGONAL BRACES IN TENSION

USE NET AREA OF MEMBER = 1.5"(1.25" − 0.81") = 9.66 IN²

$F_T$ = 1200 PSI (9.66 IN²) = 11592#

3. DETERMINE STRENGTH VALUE OF THE TENSION MEMBERS

11592# > 2080# ∴ CONNECTION CONTROLS TENSION

4. CALCULATE THE HORIZONTAL COMPONENT OF THE STRENGTH VALUE FOR THE TENSION MEMBERS

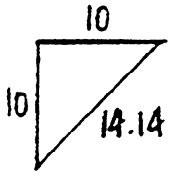


$$T = 2080 \times \frac{10}{14.14} = 1471\#$$

5. DETERMINE THE STRENGTH OF THE DIAGONAL BRACES IN COMPRESSION

CONNECTION = <u>2080#</u> FROM ABOVE

UNSUPPORTED LENGTH OF 2×8 = 7.01' $\quad \dfrac{480000}{(7.01 \times 12/1.5)^2} = 150$ PSI

150 PSI (1.5" × 7.25") = <u>1631#</u>

6. DETERMINE THE STRENGTH VALUE OF THE COMPRESSION MEMBERS

1631# < 2080# $\quad \therefore$ 2×8 BRACE CONTROLS COMPRESSION

ALLOW ½ THEORETICAL FOR COMPRESSION VALUE $\quad \frac{1}{2}(1631\#) = 816\#$

7. CALCULATE THE HORIZONTAL COMPONENT OF THE STRENGTH VALUE FOR THE COMPRESSION MEMBERS.

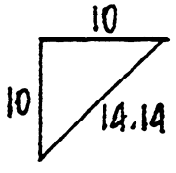


$$C = 816 \times \frac{10}{14.14} = 577\#$$

8. CALCULATE THE TOTAL RESISTING CAPACITY OF THE DIAGONAL BRACING SYSTEM

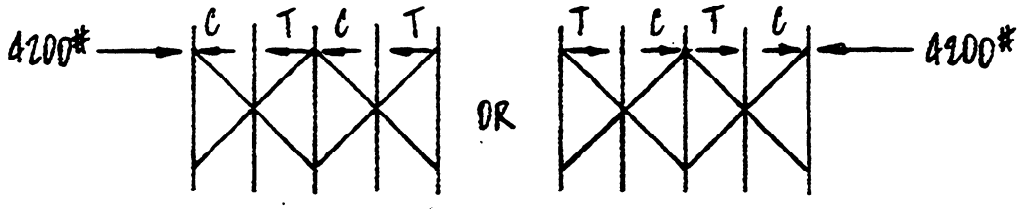


TOTAL RESISTING CAPACITY = $\Sigma(C+T) = 577 + 1471 + 577 + 1471 = 4096\#$

COLLAPSING FORCE = 4200# > 4096# $\quad \therefore$ <u>BRACING SYSTEM IS INADEQUATE</u>

# EXAMPLE NO. 5
## ADEQUACY OF DIAGONAL BRACING
## MULTI-TIERED FRAMED BENT

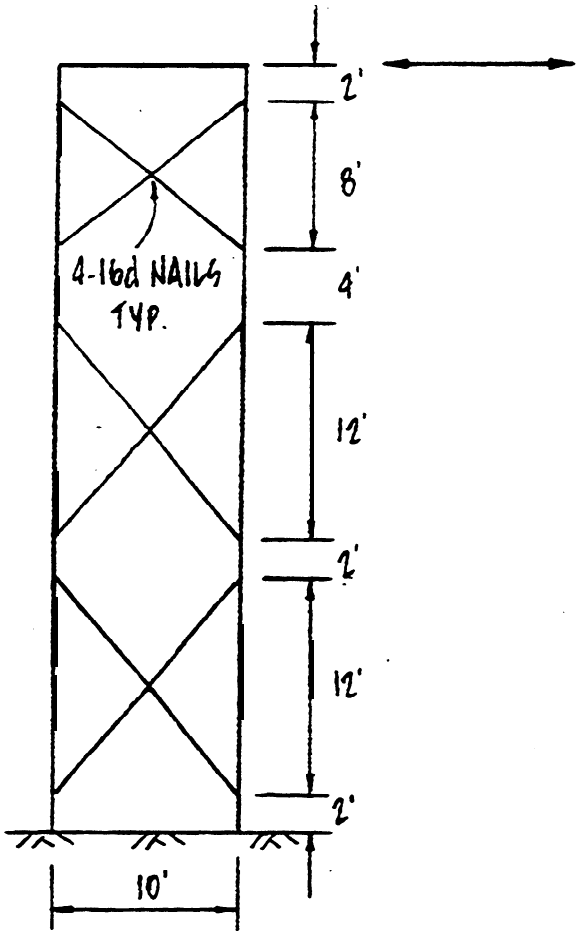


2% DEAD LOAD = 2100 #
WIND LOAD = 2800 #

POSTS: 12 x 12 ROUGH

DIAGONAL BRACES: 2 x 8 S4S

CONNECTORS: TOP BRACES 1-7/8" ϕ BOLT
MIDDLE BRACES 1-1" "
BOTTOM BRACES 1-1" "
ALL BOLTS IN SINGLE SHEAR

**IS THE BRACING SYSTEM ADEQUATE**

**ANALYZE THE TOP TIER**

1. DETERMINE THE STRENGTH OF THE CONNECTION BETWEEN BRACE AND POST:

CHECK BOLT CAPACITY IN THE SIDE MEMBER. FROM SECT. 4-3.02 OF FALSEWORK MANUAL, ENTER CHART FOR A MEMBER SIZE = 2 x THICKNESS OF SIDE MEMBER.

2 x 1.5" = 3" P = 3220 # x 0.75 FOR SINGLE SHEAR = 2415 #

CHECK BOLT CAPACITY IN THE MAIN MEMBER. FROM SECT 4-3.02 OF FALSEWORK MANUAL, ENTER CHART FOR MEMBER SIZE = 12"

P = 3900 # Q = 2060 #

1. CONTINUED

<u>CHECK BOLT CAPACITY IN MAIN MEMBER (CONT.)</u>

USE HANKINSON'S FORMULA:

$$R = \frac{PQ}{P\sin^2\theta + Q\cos^2\theta}$$

$\theta = \tan^{-1}\frac{10}{8} = 51.3°$

$\sin^2 51.3° = 0.61 \qquad \cos^2 61.3 = 0.39$

$$R = \frac{3900(2060)}{3900(0.61) + 2060(0.39)} = 2525\# \times 0.75 = \underline{1894\#}$$

FOR SINGLE SHEAR

$1894\# < 2415\#$ ∴ MAIN MEMBER CONTROLS CONNECTION CAPACITY

SINCE THE WIND LOAD CONTROLS THE HORIZONTAL DESIGN FORCE APPLY 1.33 LOAD DURATION FACTOR AS PER SECT. 4-3.06 OF FW MANUAL.

STRENGH OF CONNECTION = $1.33 \times 1894 = \underline{2519\#}$

2. DETERMINE THE STRENGTH OF THE DIAGONAL BRACES IN TENSION.

USE NET AREA OF MEMBER - $1.5"(1.25" - 0.94") = 9.41\ IN^2$

$F_T = 1200\ PSI\ (9.41\ IN^2) = \underline{11\,364\#}$

3. DETERMINE THE STRENGTH VALUE OF THE TENSION MEMBERS.

$11364\# > 2519\#$ ∴ CONNECTION CONTROLS TENSION

4. CALCULATE THE HORIZONTAL COMPONENT OF THE STRENGTH VALUE FOR THE TENSION MEMBERS.

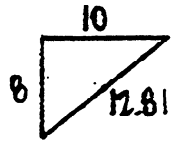


$$T = 2519 \times \frac{10}{12.81} = 1967\#$$

5. DETERMINE THE STRENGTH OF THE DIAGONAL BRACES IN COMPRESSION.

CONNECTION = $\underline{2519\#}$ FROM ABOVE

5. CONTINUED

ALLOWABLE COMPRESSION IN 2×8

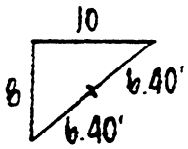


CHECK ADEQUACY OF CONNECTION TO REDUCE UNSUPPORTED LENGTH OF COMPRESSION MEMBER.

REF.: N.D.S. TABLE 8.8B

ASSUME SPECIFIC GRAVITY G = 0.51

16d BOX NAILS

WITHDRAWAL CAPACITY = 35 #/INCH OF PENETRATION

CAPACITY OF 4 EA 16d = 4 × 35# × 1.5" × 1.33 = 279 # > 250# OK

LOAD DURATION

SEE FW MANUAL SECT. 5-1.03

$$\frac{480{,}000}{(L/d)^2} = \frac{480{,}000}{(6.40 \times 12/1.5)^2} = 183.1 \text{ PSI}$$

183.1 PSI (1.5" × 1.25") = <u>1991 #</u>

6. DETERMINE THE STRENGTH VALUE OF THE COMPRESSION MEMBERS

1991 # < 2519 # ∴ 2×8 BRACE CONTROLS COMPRESSION

ALLOW ½ THEORETICAL FOR COMPRESSION VALUE. ½ (1991) = 996 #

7. CALCULATE THE HORIZONTAL COMPONENT OF THE STRENGTH VALUE FOR THE COMPRESSION MEMBER.

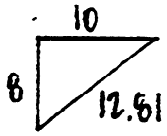


$$C = 996 \times \frac{10}{12.81} = 778 \#$$

8. CALCULATE THE TOTAL RESISTING CAPACITY OF THE TOP TIER OF BRACING.

TOTAL = C + T = 778 # + 1967 # = 2745 #

ANALYZE THE MIDDLE TIER

1. DETERMINE THE STRENGTH OF THE CONNECTION BETWEEN BRACE AND POST.

CHECK BOLT CAPACITY IN THE SIDE MEMBER. FROM SECT. 4-3.02 OF FW MANUAL

1. CONTINUED

ENTER CHART FOR A MEMBER SIZE = 2 × THICKNESS OF SIDE MEMBER.

$2 \times 1.5" = 3"$ $\quad P = 3750\# \times 0.15$ FOR SINGLE SHEAR $= 2813\#$

<u>CHECK BOLT CAPACITY IN THE MAIN MEMBER.</u> FROM SECT. 4-3.02 OF FW MANUAL, ENTER CHART FOR MEMBER SIZE = 12".

$P = 5080\#$ $\quad Q = 2710\#$

USE HANKINSON'S FORMULA:

$$R = \frac{PQ}{P\sin^2\theta + Q\cos^2\theta}$$

$$\theta = \tan^{-1}\frac{10}{12} = 39.8°$$

$\sin^2 39.8° = 0.41$ $\quad \cos^2 39.8° = 0.59$

$$R = \frac{5080(2710)}{5080(0.41) + 2710(0.59)} = 3139\# \times 0.15 = \underline{2804\#}$$

FOR SINGLE SHEAR

$2804\# < 2813\#$ $\quad \therefore$ MAIN MEMBER CONTROLS CONNECTION CAPACITY

SINCE THE WIND LOAD CONTROLS THE HORIZONTAL DESIGN FORCE APPLY 1.33 LOAD DURATION FACTOR AS PER SECTION 4-3.06 OF FW MANUAL.

STRENGTH OF CONNECTION $= 1.33 \times 2804 = \underline{3729\#}$

2. DETERMINE THE STRENGTH OF THE DIAGONAL BRACES IN TENSION

USE NET AREA OF MEMBER - $1.5"(1.25" - 1.06") = 9.28\ IN^2$

$F_T = 1200\ PSI\ (9.28\ IN^2) = \underline{11136\#}$

3. DETERMINE THE STRENGTH VALUE OF THE TENSION MEMBERS.

$11136\# > 3729\#$ $\quad \therefore$ CONNECTION CONTROLS TENSION

4. CALCULATE THE HORIZONTAL COMPONENT OF THE STRENGTH VALUE FOR THE TENSION MEMBERS.

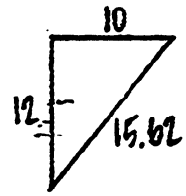


$$T = 3729 \times \frac{10}{15.62} = 2388\#$$

5. DETERMINE THE STRENGTH OF THE DIAGONAL MEMBERS IN COMPRESSION

CONNECTION = 3129 # FROM ABOVE

ALLOWABLE COMPRESSION IN 2×8

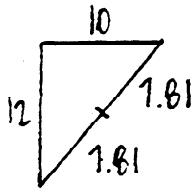


(FROM STEP 5 OF TOP TIER CALCS, CONNECTION FOUND ADEQUATE TO REDUCE UNSUPPORTED LENGTH.)

$$\frac{480\,000}{(L/d)^2} = \frac{480\,000}{(1.81 \times 12/1.5)^2} = 123.0 \text{ PSI}$$

$$123.0 \text{ PSI } (1.5'' \times 1.25'') = 1338\#$$

6. DETERMINE THE STRENGTH VALUE OF THE COMPRESSION MEMBERS

1338 # < 3129 # ∴ 2×8 BRACE CONTROLS COMPRESSION

ALLOW ½ THEORETICAL FOR COMPRESSION VALUE. ½ (1338) = 669 #

7. CALCULATE THE HORIZONTAL COMPONENT OF THE STRENGTH VALUE FOR THE COMPRESSION MEMBER

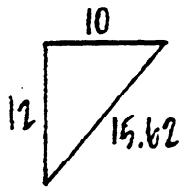


$$C = 669 \times \frac{10}{15.62} = 428\#$$

8. CALCULATE THE TOTAL RESISTING CAPACITY OF THE MIDDLE TIER OF BRACING.

TOTAL = C + T = 428 # + 2388 # = 2816 #

ANALYZE THE BOTTOM TIER

SINCE THE BOTTOM TIER IS IDENTICAL TO THE MIDDLE TIER, THE RESISTING CAPACI
IS EQUAL TO THE MIDDLE TIER. BY INSPECTION, C + T = 2816 #

SUMMARY

| TIER | RESISTING CAPACITY | COLLAPSING FORCE = 2800 # |
|---|---|---|
| TOP | 2145 # | NO GOOD → ∴ THE BRACING SYST |
| MIDDLE | 2816 | OKAY IS INADEQUATE |
| BOTTOM | 2816 | OKAY |

# EXAMPLE NO. 6
## ADEQUACY OF DIAGONAL BRACING
## MULTI-TIERED FRAMED BENTS

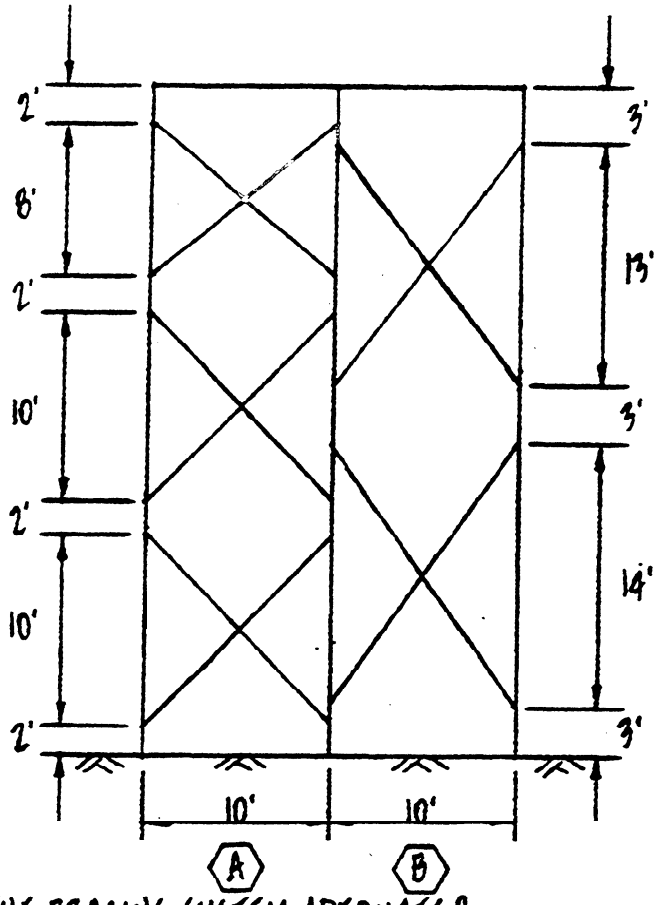


2% DEAD LOAD = 3500 #
WIND LOAD = 3200 #

POSTS: 12 x 12 ROUGH

DIAGONAL BRACES: 2 x 8 S4S

CONNECTORS:
BRACE TO POST 1-3/4" ϕ BOL
INTERSECTION OF BRACE 1-3/4" ϕ BOL
ALL BOLTS IN SINGLE SHEAR

IS THE BRACING SYSTEM ADEQUATE?

ANALYZE THE TOP TIER OF BRACING IN (A)

1. DETERMINE THE STRENGTH OF THE CONNECTION BETWEEN BRACE AND POST

CHECK BOLT CAPACITY IN THE SIDE MEMBER. FROM SECT 4-3.02 OF FW MANUAL, ENTE CHART FOR A MEMBER SIZE = 2 x THICKNESS OF SIDE MEMBER.

2 x 1.5" = 3.0" P = 2630 # x 0.75 FOR SINGLE SHEAR = 1973 #

CHECK BOLT CAPACITY IN THE MAIN MEMBER. FROM SECT. 4-3.02 OF FW MANUAL, EN CHART FOR A MEMBER SIZE = 12"

P = 2860 # Q = 1640 #

CHECK BOLT CAPACITY IN MAIN MEMBER (CONT.)

USE HANKINSON'S FORMULA:

$$R = \frac{PQ}{P\sin^2\theta + Q\cos^2\theta} \qquad \theta = \tan^{-1}\frac{10}{8} = 51.3^\circ \quad \sin^2 51.3^\circ = 0.61 \quad \cos^2 51.3^\circ = 0.39$$

$$R = \frac{2860(1640)}{2860(0.61) + 1640(0.39)} = 1961\# \times 0.75 = \underline{1475\#}$$

FOR SINGLE SHEAR

$1475\# < 1973\#$ ∴ MAIN MEMBER CONTROLS CONNECTION CAPACITY

SINCE THE 2% DEAD LOAD CONTROLS THE HORIZONTAL DESIGN FORCE, APPLY 1.25 LOAD DURATION FACTOR AS PER SECT. 4-3.06 OF FW MANUAL.

STRENGTH OF CONNECTION = 1.25 × 1475 = $\underline{1844\#}$

2. DETERMINE THE STRENGTH OF THE DIAGONAL BRACES IN TENSION

USE NET AREA OF MEMBER - $1.5''(1.25'' - 0.81'') = 9.66\ IN^2$

$F_T = 1200\ PSI\ (9.66\ IN^2) = \underline{\underline{11592\#}}$

3. DETERMINE THE STRENGTH VALUE OF THE TENSION MEMBERS.

$11592\# > 1844\#$ ∴ CONNECTION CONTROLS TENSION

4. CALCULATE THE HORIZONTAL COMPONENT OF THE STRENGTH VALUE FOR THE TENSION MEMBER.

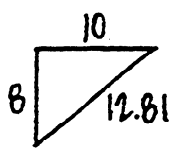


$$T = 1844 \times \frac{10}{12.81} = 1440\#$$

5. DETERMINE THE STRENGTH OF THE DIAGONAL BRACES IN COMPRESSION

CONNECTION = $\underline{1844\#}$ FROM ABOVE

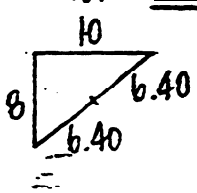


BY INSPECTION, THE 3/4" BOLT AT THE INTERSECTION OF THE BRACES WILL TAKE MORE THAN 250# PERPENDICULAR TO THE BRACES, SO THE UNSUPPORTED LENGTH OF THE COMPRESSION MEMBER = 6.40'

5. CONTINUED

$$\frac{480000}{(L/d)^2} = \frac{480000}{(6.40 \times 12/1.5)^2} = 183.1 \text{ PSI}$$

$$183.1 \text{ PSI } (1.5 \times 1.25) = \underline{1991\#}$$

6. DETERMINE THE STRENGTH VALUE OF THE COMPRESSION MEMBERS

$1844\# < 1991\#$ ∴ CONNECTION CONTROLS COMPRESSION

ALLOW ½ THEORETICAL FOR COMPRESSION VALUE. $\frac{1}{2}(1844) = 922\#$

7. CALCULATE THE HORIZONTAL COMPONENT OF THE STRENGTH VALUE FOR THE COMPRESSION MEMBER

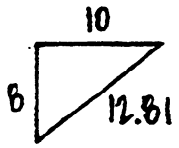


$$C = 922 \times \frac{10}{12.81} = 720\#$$

8. CALCULATE THE TOTAL RESISTING CAPACITY OF THE TOP TIER OF BRACING

$$\text{TOTAL} = C + T = 720\# + 1440\# = 2160\#$$

## ANALYZE REMAINING TIERS IN (A) AND (B)

CALCULATIONS ARE SIMILAR TO ABOVE PROCEDURE AND ARE SUMMARIZED ON NEXT PAGE

| STEP | DESCRIPTION | (A) MIDDLE TIER = BOTTOM TIER | (B) TOP TIER | (B) BOTTOM TIER |
|---|---|---|---|---|
| 1 | BOLT CAP. IN SIDE MEMBER | $P = 2630 \times 0.75 = 1973^{\#}$ | $P = 1973^{\#}$ | $P = 1973^{\#}$ |
| | BOLT CAP. IN MAIN MEMBER | $P = 2860^{\#}$ $Q = 1640^{\#}$<br>$\theta = \tan^{-1}\frac{10}{10} = 45°$<br>$R = 2085 \times 0.75 = 1564^{\#}$ | $P = 2860^{\#}$ $Q = 1640^{\#}$<br>$\theta = \tan^{-1}\frac{10}{13} = 37.6°$<br>$R = 2243 \times 0.75 = 1682^{\#}$ | $P = 2860^{\#}$ $Q = 1640^{\#}$<br>$\theta = \tan^{-1}\frac{10}{14} = 35.5°$<br>$R = 2283 \times 0.75 = 1712^{\#}$ |
| | CONTROLLING | $1564^{\#} < 1973^{\#}$<br>MAIN MEMBER | $1682^{\#} < 1973^{\#}$<br>MAIN MEMBER | $1712^{\#} < 1973^{\#}$<br>MAIN MEMBER |
| | STRENGTH OF CONNECTION | $1.25 \times 1564 = 1955^{\#}$ | $1.25 \times 1682 = 2103^{\#}$ | $1.25 \times 1712 = 2140^{\#}$ |
| 2 | STRENGTH OF DIAGONAL BRACE IN TENSION | $1.5(1.25 - 0.81) = 9.66\ IN^2$<br>$F_T = 1200(9.66) = 11592^{\#}$ | AREA $= 9.66\ IN^2$<br>$F_T = 11592^{\#}$ | AREA $= 9.66\ IN^2$<br>$F_T = 11592^{\#}$ |
| 3 | STRENGTH OF TENSION MEMBER | $11592^{\#} > 1955^{\#}$<br>CONNECTION CONTROLS | $11592^{\#} > 2103^{\#}$<br>CONNECTION CONTROLS | $11592^{\#} > 2140^{\#}$<br>CONNECTION CONTROLS |
| 4 | HORIZ. COMPONENT TENSION MEMBER | $1955 \times \frac{10}{14.14} = \underline{1383^{\#}}$ | $2103 \times \frac{10}{16.40} = \underline{1282^{\#}}$ | $2140 \times \frac{10}{17.21} = \underline{1243^{\#}}$ |
| 5 | STRENGTH OF DIAGONAL BRACE IN COMPRESSION | CONNECTION CAP. $= 1955^{\#}$ | CONNECTION CAP. $= 2103^{\#}$ | CONNECTION CAP. $= 2140^{\#}$ |
| | | $\frac{480000}{(7.07 \times 12/1.5)^2} = 150$ PSI<br>$150(1.5 \times 1.25) = 1631^{\#}$ | $\frac{480000}{(8.20 \times 12/1.5)^2} = 112$ PSI<br>$112(1.5 \times 1.25) = 1218^{\#}$ | $\frac{480000}{(8.60 \times 12/1.5)^2} = 101$ PSI<br>$101(1.5 \times 1.25) = 1098^{\#}$ |
| 6 | STRENGTH OF COMP. MEMBER | $1631^{\#} < 1955^{\#}$ BRACE CONTROLS<br>$\frac{1}{2} \times 1631 = 816^{\#}$ | $1218^{\#} < 2103^{\#}$ BRACE CONTROLS<br>$\frac{1}{2} \times 1218 = 609^{\#}$ | $1098^{\#} < 2140^{\#}$ BRACE CONTROLS<br>$\frac{1}{2} \times 1098 = 549^{\#}$ |
| 7 | HORIZ. COMPONENT COMP. MEMBER | $816 \times \frac{10}{14.14} = \underline{577^{\#}}$ | $609 \times \frac{10}{16.40} = \underline{371^{\#}}$ | $549 \times \frac{10}{17.21} = \underline{319^{\#}}$ |
| 8 | TOTAL RESISTING CAPACITY | $577 + 1383 = 1960^{\#}$ | $371 + 1282 = 1653^{\#}$ | $319^{\#} + 1243^{\#} = 1562^{\#}$ |

## SUMMARY OF RESISTING CAPACITIES

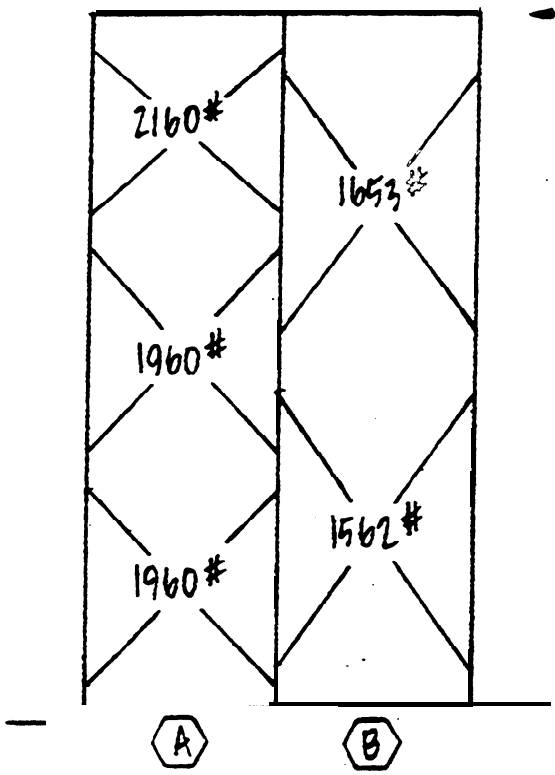


CONTROLLING HORIZONTAL DESIGN FORCE = 2% DEAD LOAD = 3500#

## CALCULATE THE TOTAL RESISTING CAPACITY OF THE BENT BRACING

THE TOTAL RESISTING CAPACITY OF THE BENT BRACING = THE SUM OF THE WEAKER PAIR OF BRACES IN (A) & THE WEAKER PAIR OF BRACES IN (B)

TOTAL RESISTING CAPACITY OF BENT BRACING = 1960# + 1562# = 3522#

SINCE 3522# > 3500#, <u>BRACING SYSTEM IS ADEQUATE</u>

# EXAMPLE NO. 1
## WIND LOADS ON CONVENTIONAL FALSEWORK

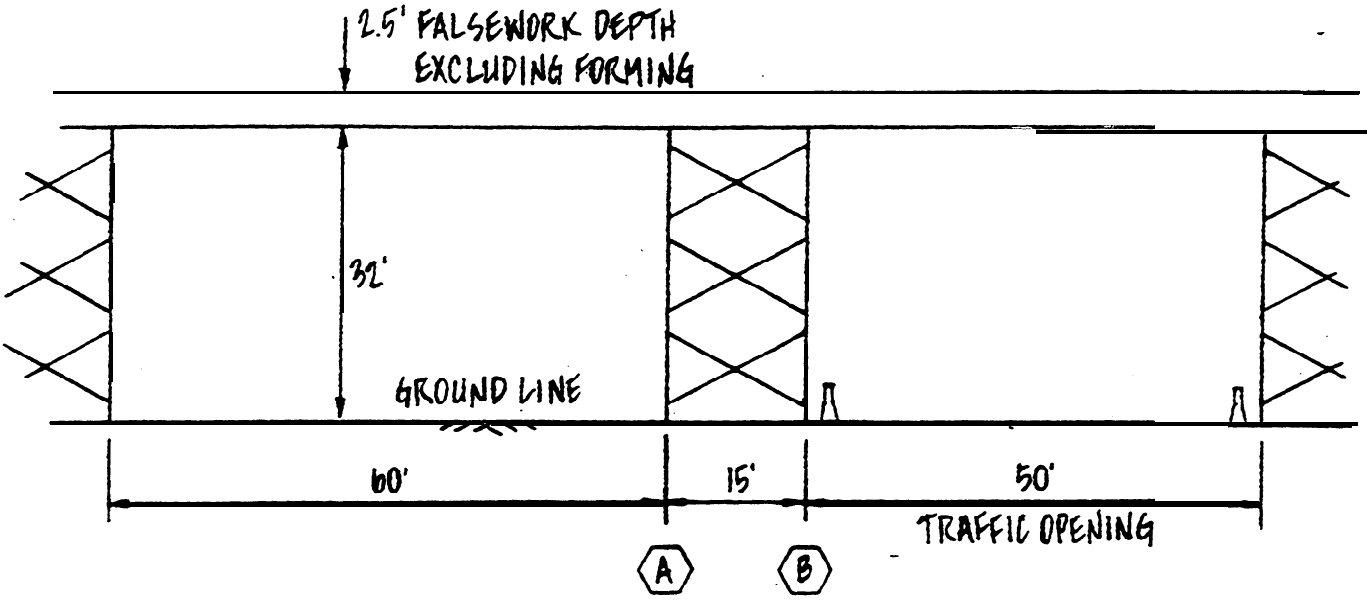


TRANSVERSE WIDTH OF FALSEWORK = 58' (INTO PAPER)

**DETERMINE THE HORIZONTAL DESIGN WIND LOAD FOR BENTS (A) AND (B)**

1. DETERMINE THE WIDTH OF THE FALSEWORK SYSTEM IN THE WIND DIRECTION. $W = 58'$
2. CALCULATE THE DRAG COEFFICIENT Q. $Q = 1 + 0.2W = 1 + 0.2(58) = 12.6 > 10$

   $\therefore Q = 10$

| HEIGHT ZONE | BENT (A) | BENT (B) |
|---|---|---|
| 0-30 | $1.5Q = 1.5(10) = 15$ PSF | $2.0Q = 2.0(10) = 20$ PSF |
| 30-32 | $2.0Q = 2.0(10) = 20$ PSF | $2.5Q = 2.5(10) = 25$ PSF |
| 32-34.5 | $2.0Q = 2.0(10) = 20$ PSF | $2.5Q = 2.5(10) = 25$ PSF |

3. CALCULATE THE WIND PRESSURE VALUE FOR EACH HEIGHT ZONE USING THE WIND VELOCITY COEFFICIENT FOR EACH HEIGHT ZONE LISTED IN SECTION 51-1.06 OF THE STANDARD SPECIFICATIONS.

| HEIGHT ZONE | BENT (A) | BENT (B) |
|---|---|---|

4. CALCULATE THE WIND IMPACT AREA FOR EACH HEIGHT ZONE

| | | |
|---|---|---|
| 0 – 30 | $30' \times 15'/2 = 225$ SF | $30' \times 15'/2 = 225$ SF |
| 30 – 32 | $2' \times 15'/2 = 15$ SF | $2' \times 15'/2 = 15$ SF |
| 32 – 34.5 | $2.5' \times \left(\frac{15'}{2} + \frac{60'}{2}\right) = 93.75$ SF | $2.5 \times \left(\frac{15'}{2} + \frac{50'}{2}\right) = 81.25$ SF |

5. CALCULATE THE TOTAL WIND LOAD FOR EACH HEIGHT ZONE

| | | |
|---|---|---|
| 0 – 30 | 15 PSF × 225 SF = 3375# | 20 PSF × 225 SF = 4500# |
| 30 – 32 | 20 PSF × 15 SF = 300# | 25 PSF × 15 SF = 375# |
| 32 – 34.5 | 20 PSF × 93.75 SF = 1875# | 25 PSF × 81.25 SF = 2031# |

6. CALCULATE OVERTURNING MOMENT

| | | |
|---|---|---|
| 0 – 30 | 3375# × 15' = 50625'# | 4500# × 15' = 67500'# |
| 30 – 32 | 300# × 31' = 9300'# | 375# × 31' = 11625'# |
| 32 – 34.5 | 1875# × 33.75' = 62344'# | 2031# × 33.25' = 67531'# |
| TOTAL | 122269'# | 146656'# |

7. CALCULATE THE HORIZONTAL DESIGN WIND LOAD

| | |
|---|---|
| $\frac{122269'\#}{32'} = 3821\#$ | $\frac{146656'\#}{32'} = 4583\#$ |

# EXAMPLE NO. 8
## WIND LOADS ON HEAVY-DUTY FALSEWORK, AND HORIZONTAL 2% DEAD LOAD

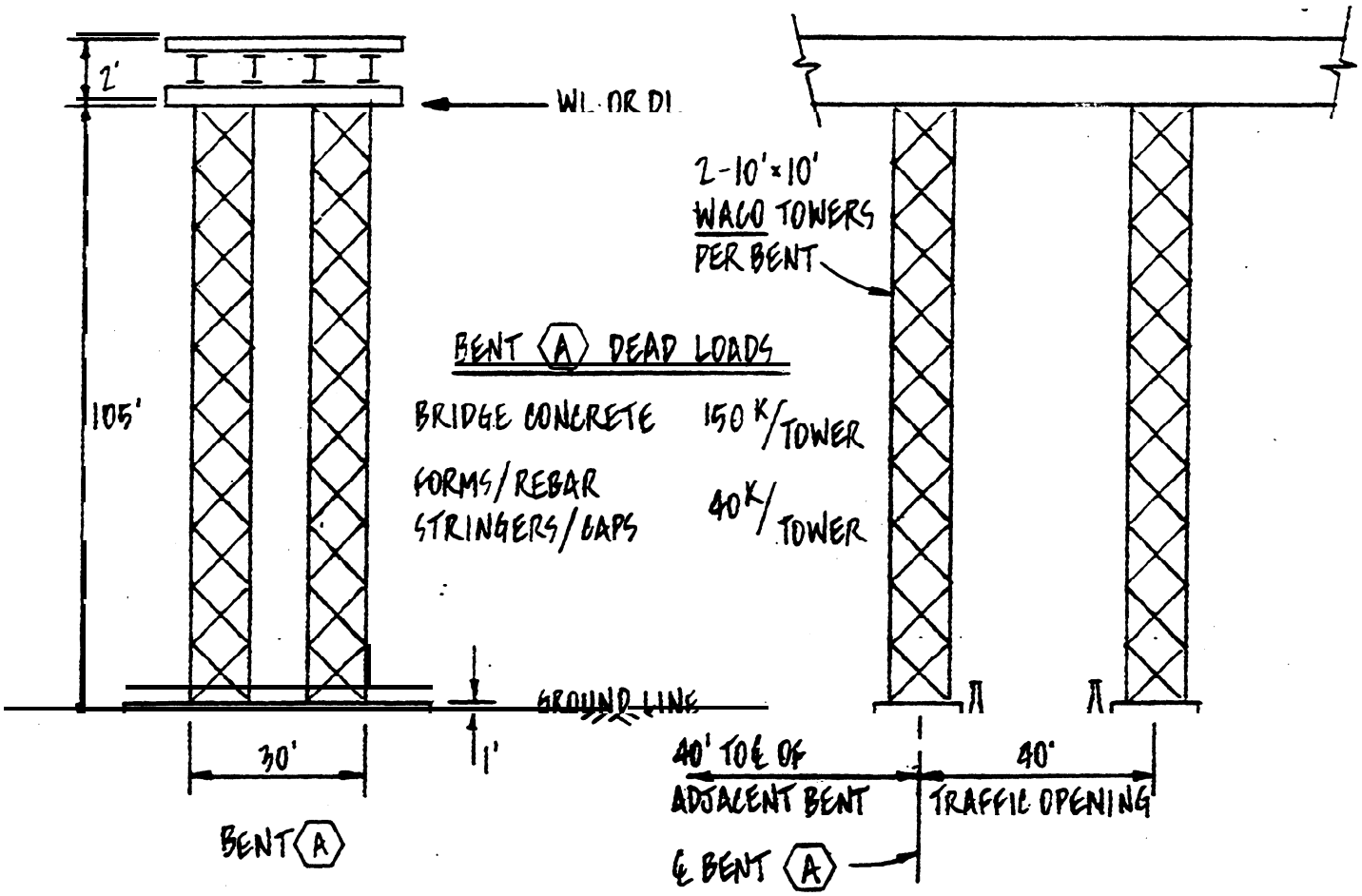


**DETERMINE THE HORIZONTAL DESIGN WIND LOAD, WL, FOR BENT (A)**

1. SELECT THE WIND PRESSURE VALUES FOR EACH HEIGHT ZONE ABOVE THE GROUND FROM SECTION 51-1.06(A) OF THE STANDARD SPECIFICATIONS

2. CALCULATE THE DESIGN WIND PRESSURE FOR EACH HEIGHT ZONE
   SHAPE FACTOR FOR HEAVY-DUTY FALSEWORK = 2.2
   DRAG COEFFICIENT FOR CONVENTIONAL FALSEWORK = $1+0.2W = 1+0.2(30) = 7 < 10 \therefore Q = 7$

| HEIGHT ZONE | FW TYPE | 1 | 2 |
|---|---|---|---|
| 0'-30' | HEAVY DUTY | 20 PSF | 20 PSF × 2.2 = 44 PSF |
| 30-50 | " | 25 | 25 × 2.2 = 55 |
| 50-100 | " | 30 | 30 × 2.2 = 66 |
| 100-105 | " | 35 | 35 × 2.2 = 77 |
| 105-107 | CONVENTIONAL | 3.5Q | 3.5(7) = 24.5 |

③ CALCULATE THE TOTAL WIND LOAD <u>PER TOWER</u> FOR EACH HEIGHT ZONE

FOR TOWER SECTION, FULL WL IS APPLIED TO EACH TOWER
*FOR SUPPORTED FW SECTION, 0.5 WL IS APPLIED TO EACH TOWER
FOR WACO SHORING, 2 LEGS/FACE, USE PROJECTED AREA = 2.00 SF/FT

} SEE FIGURES 3, THRU 3-4 IN SECT. 3-1.05A OF FWMAN

④ CALCULATE THE OVERTURNING MOMENT ABOUT THE BASE OF THE TOWER

| HEIGHT ZONE | ② | ③ | ④ |
|---|---|---|---|
| 0 - 30 | 44 PSF | 44 PSF × 2.00 × 30' = 2640# | 2640# × 14' = 36960 |
| 30 - 50 | 55 | 55 × 2.00 × 20' = 2200 | 2200 × 39' = 85800 |
| 50 - 100 | 66 | 66 × 2.00 × 50' = 6600 | 6600 × 74' = 488400 |
| 100 - 105 | 77 | 77 × 2.00 × 5' = 770 | 770 × 101.5' = 78155 |
| 105 - 107 | 24.5 | 24.5 × 2 × 40' × 0.5* = 980 | 980 × 105 = <u>102900</u> |

TOTAL OVERTURNING MOMENT = 792215'#

⑤ CALCULATE THE HORIZONTAL DESIGN WIND LOAD AT THE TOP OF THE TOWER.

$$\frac{792215'\#}{104'} = 7617\#$$

<u>DETERMINE THE HORIZONTAL DESIGN 2% DEAD LOAD, DL, FOR BENT (A)</u>

| | |
|---|---|
| DEAD LOAD-BRIDGE CONCRETE | 150 K/TOWER |
| DEAD LOAD-FORMS/REBAR/STRINGERS/CAPS | 40 K/TOWER |
| | 190 K/TOWER |

2% DEAD LOAD = 0.02 × 190 K = 3.8 K = 3800#

<u>DETERMINE THE CONTROLLING HORIZONTAL DESIGN LOAD</u>

WIND LOAD = 7630#
2% DEAD LOAD = 3800#

} HORIZONTAL DESIGN LOAD = 7630#

# EXAMPLE NO. 9
## CABLE BRACING TO RESIST HORIZONTAL DESIGN LOAD

USING THE RESULTS OF EXAMPLE NO. 8, CHECK THE ADEQUACY OF THE CABLE BRACING TO PREVENT TOWER OVERTURNING.

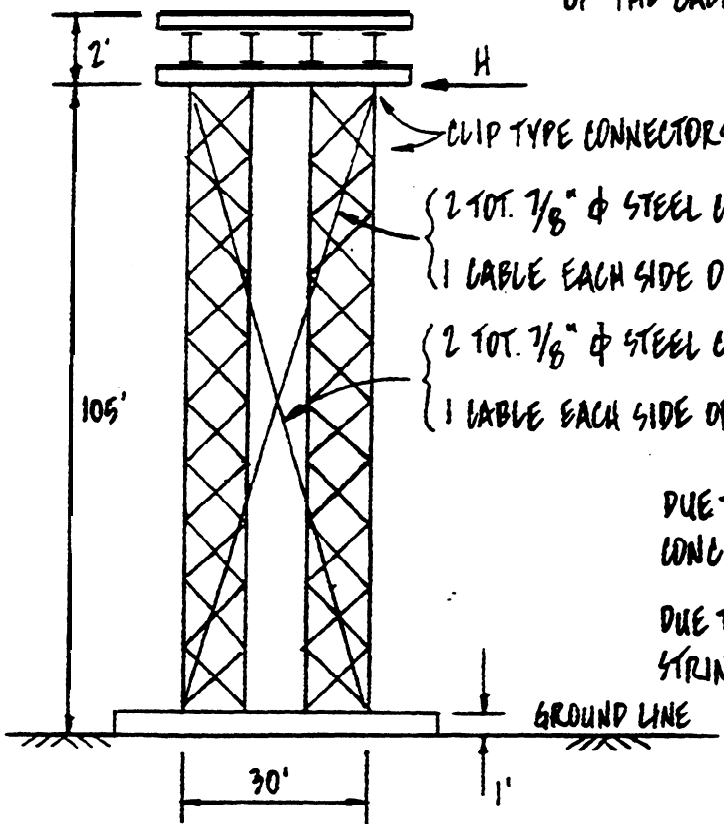


H = 1617# (WIND LOAD)

ULTIMATE CABLE LOAD SPECIFIED BY MANUFACTURER = 69.2 K

WACO 10×10 TOWERS.
WEIGHT OF TOWER = $\frac{0.2 \text{ KIPS}}{\text{HEIGHT (FEET)}}$

TOWER REACTIONS

DUE TO BRIDGE CONCRETE: 15 K, 15 K, 15 K, 15 K

DUE TO FORMS, CAP STRINGERS, REBAR: 20 K, 20 K, 20 K, 20 K

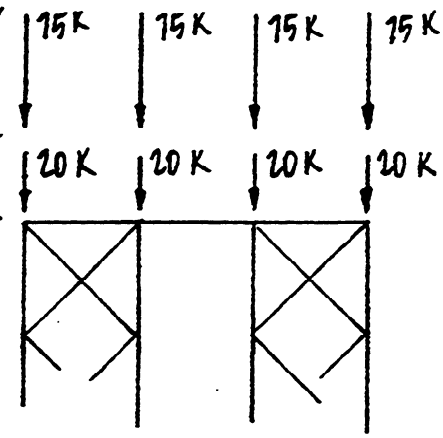

CHECK THE STABILITY OF THE UNLOADED TOWERS

1. CALCULATE THE RESISTING MOMENT BEFORE THE BRIDGE CONCRETE IS PLACED.

   TOWER WEIGHT $W = 0.2 \frac{K}{FT}(104') = 21 \text{ K}$ SAY

   RESISTING MOMENT PER TOWER $= 10'(20 \text{ K}) + 5'(21 \text{ K}) = 305 \text{ 'K}$

2. OVERTURNING MOMENT $= 104'(1617\#/1000) = 192 \text{ 'K}$

3. SINCE OTM, 192 'K > RESISTING MOMENT, 305 'K,
   CABLE BRACING IS REQUIRED FOR UNLOADED CONDITION

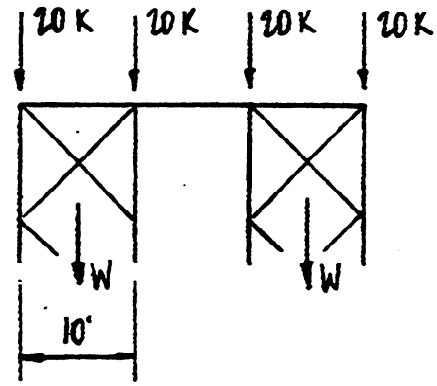

4. CALCULATE THE FORCE IN THE CABLES

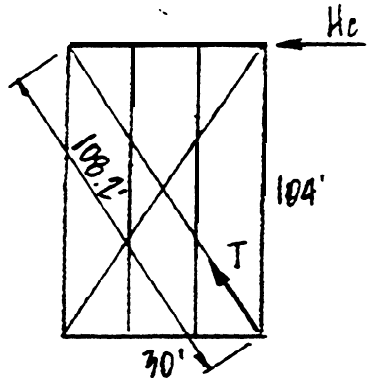


EXCESS OVERTURNING, ONE TOWER = 192 'K - 305 'K = 481 'K

EXCESS OVERTURNING, TWO TOWERS = 2(481 'K) = 914 'K

$$H_c = \frac{914\ 'K}{104'} = 9.37\ K$$

$$\text{FORCE IN CABLES, } T = \frac{108.2}{30} \times 9.37\ K = 33.8\ K$$

5. CHECK CABLES

FROM SECT. 4-5.03 OF FW MANUAL: EFFICIENCY OF CLIP TYPE CONNECTORS = 80%
USE FACTOR OF SAFETY = 2.0

ULTIMATE CABLE LOAD = 69.2 K

$$\text{SAFE WORKING LOAD} = \frac{\text{BREAKING STRENGTH} \times \text{CONNECTOR EFFICIENCY}}{\text{SAFETY FACTOR}} = \frac{69.2^{K} \times 0.80}{2.0} = 27.7\ K$$

$$27.7 \frac{K}{\text{CABLE}} \times 2 \text{ CABLES} = 55.4\ K$$

33.8 K < 55.4 K ALLOWABLE OK

<u>CHECK THE STABILITY OF THE LOADED TOWERS</u>

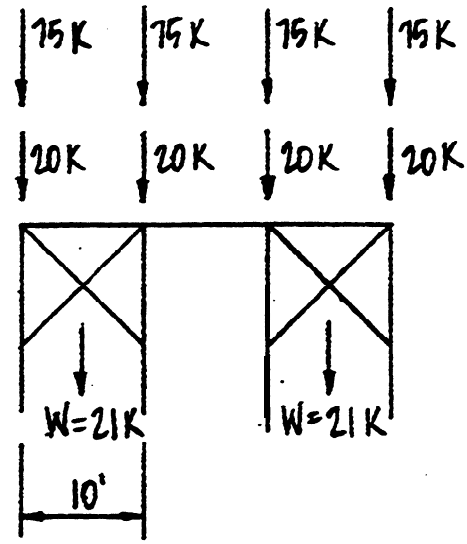


1. CALCULATE THE RESISTING MOMENT AFTER THE BRIDGE CONCRETE IS PLACED.

   RESISTING MOMENT OF 2 TOWER UNIT =

   $$2 \times \left[5'(21\ K) + 10'(95\ K)\right] = 2110\ 'K$$

2. OVERTURNING MOMENT OF 2 TOWER UNIT =

   $$2 \times 192\ 'K = 1584\ 'K$$

3. SINCE OTM, 1582 'K < RESISTING MOMENT, 2110 'K,
   <u>CABLE BRACING IS NOT REQUIRED FOR LOADED CONDITION</u>

# EXAMPLE NO. 10
## HORIZONTAL FORCES IN THE LONGITUDINAL DIRECTION

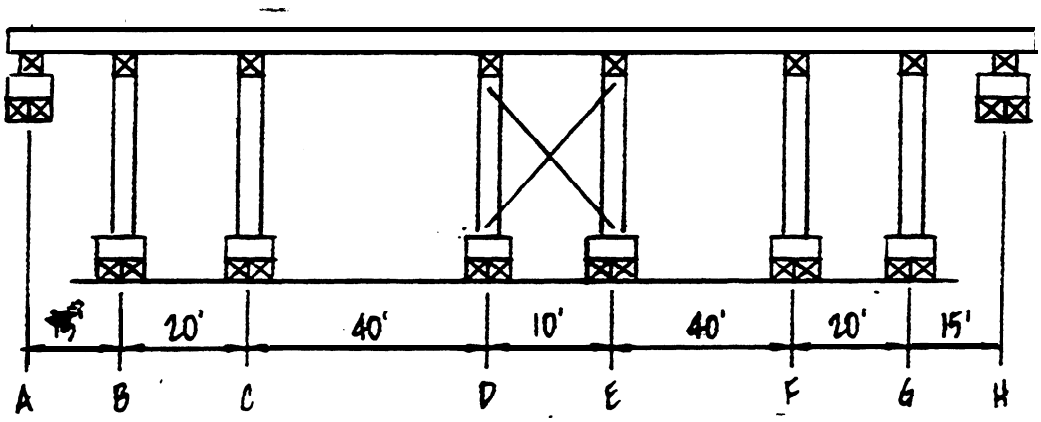


GIVEN: $DL_1$ = WEIGHT OF CONCRETE/GIRDER BASED ON 160 LB/CF = 2000 PLF

$DL_2$ = WEIGHT OF FALSEWORK STRINGER = 100 PLF

THE CONTROLLING HORIZONTAL FORCE IS 2% DEAD LOAD

**INVESTIGATE THE STABILITY OF THE FALSEWORK BENTS WHEN THE HORIZONTAL DESIGN FORCE IS APPLIED IN THE LONGITUDINAL DIRECTION**

**CALCULATE THE HORIZONTAL DESIGN FORCE**

| SPAN | HORIZONTAL DESIGN FORCE | SPAN | HORIZONTAL DESIGN FORCE |
|---|---|---|---|
| AB = GH | 0.02(2000+100)15 = 630# | CD = EF | 0.02(2000+100)40 = 1680# |
| BC = FG | 0.02(2000+100)20 = 840# | DE | 0.02(2000+100)10 = 420# |

**CALCULATE THE FRICTION TRANSFER CAPABILITY (FTC)**

FROM SECT. 5-1.04 OF FALSEWORK MANUAL, THE FTC IN THE UNLOADED CONDITION IS THE FTC THAT WILL BE DEVELOPED BY THE DEAD LOAD OF THE FALSEWORK MEMBERS PLUS AN ALLOWANCE FOR THE WEIGHT OF FORMS AND REINFORCING STEEL.

WEIGHT OF FALSEWORK MEMBERS = 100 PLF $\mu = 0.30$ (SECT. 3-3.03 OF FW MANUAL)

WEIGHT OF FORMS AND REINFORCING STEEL = $\frac{10}{160}$(2000 PLF) = 125 PLF

CALCULATE THE FRICTION TRANSFER CAPABILITY (FTC) - CONTINUED

| LOCATION BETWEEN BENT | LOCATION AND STRINGER | FTC | LOCATION BETWEEN BENT | LOCATION AND STRINGER | FTC |
|---|---|---|---|---|---|
| A<br>B<br>G<br>H | AB<br>BA<br>GH<br>HG | $0.30(100+125)\frac{15'}{2}=506\#$ | C<br>D<br>E<br>F | CD<br>DC<br>EF<br>FE | $0.30(100+125)\frac{40}{2}=1351$ |
| B<br>C<br>F<br>G | BC<br>CB<br>FG<br>GF | $0.30(100+125)\frac{20'}{2}=675\#$ | D<br>E | DE<br>ED | $0.30(100+125)\frac{10'}{2}=338$ |

AS PER SECT. 5-1.02 OF FALSEWORK MANUAL:

BENTS A & H ARE INTERNALLY STABLE (SINCE POST HEIGHT < 3 TIMES POST WIDTH) AND BRACING IS NOT REQUIRED.

BENTS B, C, D, E, F, & G ARE NOT INTERNALLY STABLE (SINCE POST HEIGHT > 3 TIMES POST WIDTH) AND BRACING, BLOCKING, TIES, ETC. ARE REQUIRED.

IN THE CASE OF THIS EXAMPLE PROBLEM, BENTS D & E ARE MADE STABLE BY DIAGONAL BRACING AND BENTS B, C, F, & G WILL HAVE TO BE MADE STABLE BY STRUTTING THE HORIZONTAL FORCES TO THE STABLE BENTS.

SPAN AB

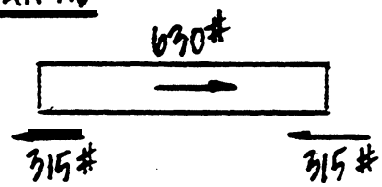


315# IS TAKEN AT STABLE BENT A, AND SINCE THE 315# IS LESS THAN THE FTC = 506#, NO MECHANICAL CONNECTION IS REQUIRED.

SPAN BC

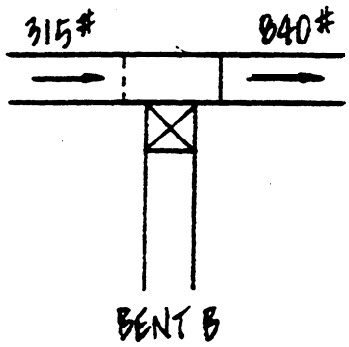


SINCE THE FTC BETWEEN BENT B AND STRINGER BA = 506# > 315#, AND SINCE THE FTC BETWEEN BENT B AND STRINGER BC = 675# > 315#, THE 315# COMING FROM SPAN AB CAN BE STRUTTED AHEAD TO A STABLE BENT AND NO MECHANICAL CONNECTIONS ARE REQUIRED.

SPAN CD

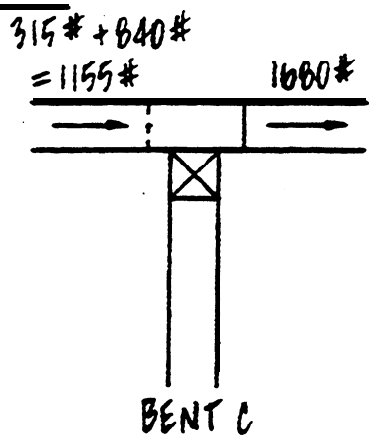


SINCE THE FTC BETWEEN BENT C AND STRINGER CB = 675# < 1155#, AND THE FTC BETWEEN BENT C AND STRINGER CD = 1350# > 1155#, A MECHANICAL CONNECTION BETWEEN BENT C AND STRINGER CB WILL BE REQUIRED, BUT FRICTION BETWEEN BENT C AND STRINGER CD WILL BE ADEQUATE TO STRUT THE 1155# COMING FROM SPANS AB & BC TO A STABLE BENT.

SPAN DE

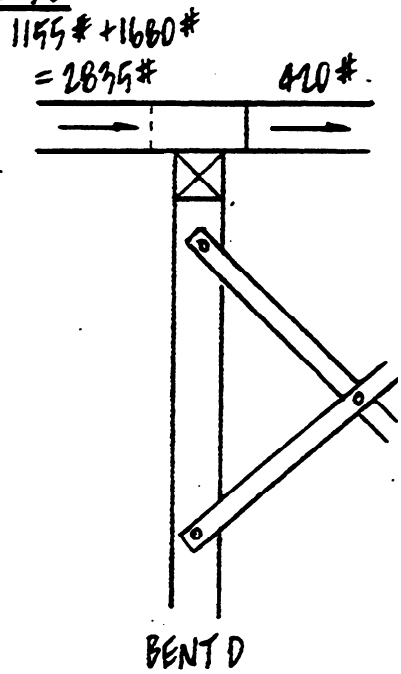


SINCE THE FTC BETWEEN BENT D AND STRINGER DC = 1350# < 2835#, A MECHANICAL CONNECTION BETWEEN BENT D AND STRINGER DC WILL BE REQUIRED.

THE 420# IN SPAN DE WILL CAUSE A REACTION OF 210# (AT EACH END) WHICH IS < FTC BETWEEN BENT D AND STRINGER DE = 338#. THEREFORE, THE 210# AT BENT D CAN BE TRANSFERRED TO THIS STABLE BENT BY FRICTION. THE DIAGONAL BRACING AT BENT D THEN MUST TAKE 2835# + 210# = 3045#

SPAN EF

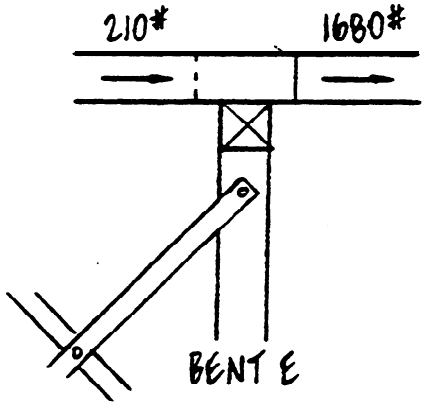


SINCE THE FTC BETWEEN BENT E AND STRINGER ED = 338# − 210#, THE 210# CAN BE TAKEN TO THE STABLE BENT E THROUGH FRICTION. THE 1680# IN SPAN EF WILL CAUSE A REACTION OF 840# (AT EACH END) AND SINCE THE FTC BETWEEN BENT E AND STRINGER EF = 1350# > 840#, THE 840# CAN BE TAKEN TO THE STABLE BENT E THROUGH FRICTION AND THE DIAGONAL BRACING WILL THEN HAVE TO TAKE 210# + 840# = 1050#.

SPAN FG

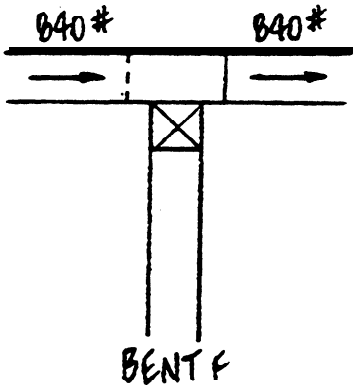


SINCE THE FTC BETWEEN BENT F AND STRINGER FE = 1350# > 840#, AND SINCE THE FTC BETWEEN BENT F AND STRINGER FG = 615# < 840#, A MECHANICAL CONNECTION BETWEEN BENT F AND STRINGER FG WILL BE REQUIRED TO STRUT THE 840# COMING FROM SPAN EF TO STABLE BENT H

SPAN GH

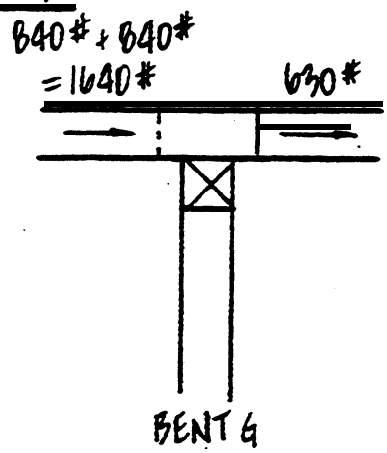


SINCE THE FTC BETWEEN BENT G AND STRINGER GF = 615# < 1680#, AND SINCE THE FTC BETWEEN BENT G AND STRINGER GH = 506# < 1680#, MECHANICAL CONNECTIONS BETWEEN BOTH STRINGERS AND BENT G WILL BE REQUIRED TO STRUT THE FORCES TO STABLE BENT H.

BENT H

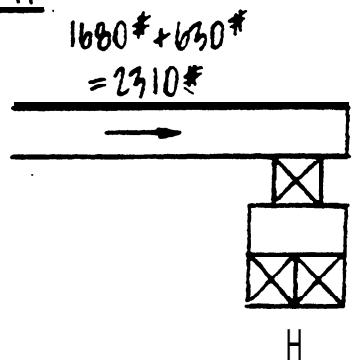


SINCE THE FTC BETWEEN BENT H AND STRINGER HG = 506# < 2310#, A MECHANICAL CONNECTION IS REQUIRED TO GET THE FORCES COMING FROM SPANS EF, FG, & GH INTO THE STABLE BENT H.

THE DIAGONAL BRACING FOR BENTS D & E MUST BE CAPABLE OF RESISTING A TOTAL HORIZONTAL FORCE OF 3045# FROM BENT D + 1050# FROM BENT E = 4095#.

A SIMILAR ANALYSIS IS REQUIRED WHEN THE HORIZONTAL DESIGN FORCES ARE APPLIED IN THE OPPOSITE DIRECTION.

# EXAMPLE 11 - INDIVIDUAL F/W PADS

## Example 11A - Symmetrical Loading (Section 7-2.04A)

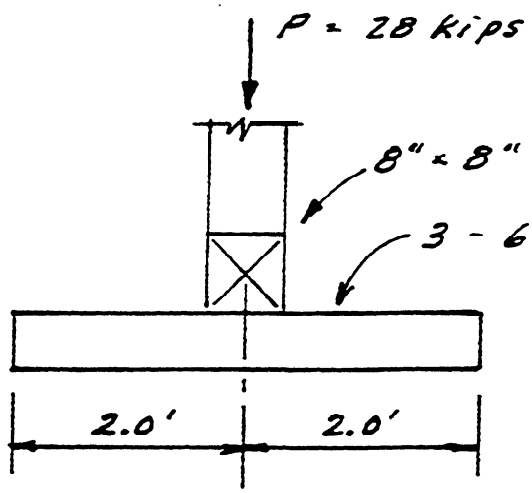


$$S = \frac{bh^2}{6} = \frac{3(12)(6)^2}{6} = 216 \text{ in}^2$$

Allowable soil pressure = 2500 psf.

## Check Pad

1. Calculate effective length

For 6" pad, $L_{SYM} = \frac{t}{12} + \frac{S}{P} = \frac{8}{12} + \frac{216}{28} = 8.38'$

2. Find the limiting length

Adjusted effective length $= 0.8L_e = 0.8(8.38) = 6.7'$

Compare adj. effective length and actual length

$6.7 > 4.0$ ; use actual length

3. Calculate soil pressure

$$\frac{P}{A} = \frac{28000}{(3.0)(4.0)} = 2333 \text{ psf} \quad \underline{OK}$$

4. Calculate stress due to horiz. shear

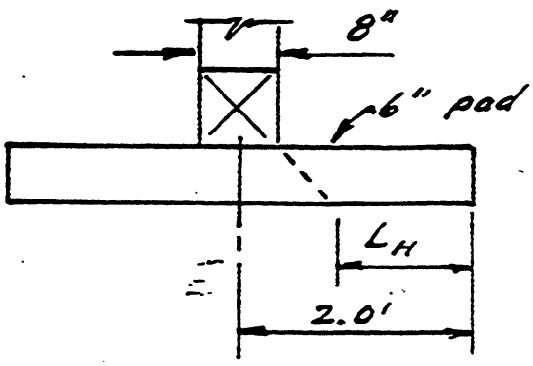


$L_H = 2.0 - 0.33 - 0.5 = 1.17'$

$V = (2333)(1.17)(3.0) = 8189$ lbs.

$$H = \frac{3V}{2A} = \frac{3(8189)}{2(6 \times 12)(3)} = 57 \text{ psi} \quad \underline{OK}$$

## Example 11A Continued

### Check Corbel

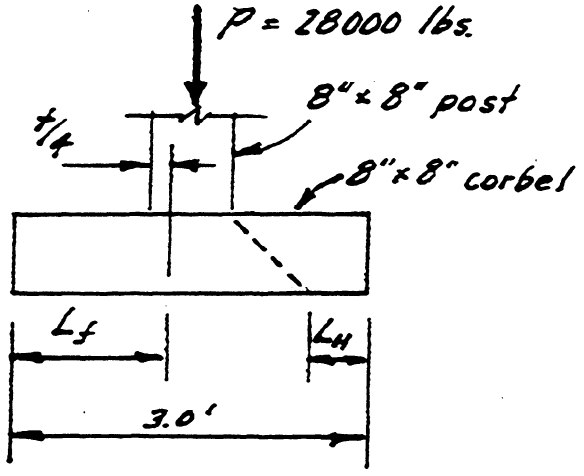


$$w = \frac{28000}{3} = 9333 \text{ lbs/foot}$$

$$S = \frac{bh^2}{6} = \frac{8(8)^2}{6} = 85.3 \text{ in}^3$$

$$A = bh = 8(8) = 64 \text{ in}^2$$

$$L_H = \frac{3.0}{2} - \frac{0.67}{2} - 0.67 = 0.5'$$

$$L_f = \frac{3.0}{2} - \frac{0.67}{2} + \frac{0.67}{4} = 1.33'$$

1. Calculate compression perpendicular to grain

$$f_c = \frac{P}{A} = \frac{28000}{64} = 438 \text{ psi} \quad \text{- OK}$$

2. Calculate horiz. shear stress

$$V = 0.5(9333) = 4667 \text{ lbs.}$$

$$H = \frac{3V}{2A} = \frac{3(4667)}{2(64)} = 109 \text{ psi} \quad \text{OK}$$

3. Calculate bending stress

$$M = \frac{wL^2}{2} = \frac{(9333)(1.33)^2}{2} = 8255 \text{ ft-lbs}$$

$$f_b = \frac{M}{S} = \frac{8255(12)}{85.3} = 1161 \text{ psi} \quad \text{OK}$$

## Example 11B - Asymmetrical Loading (Section 7-2.04B)

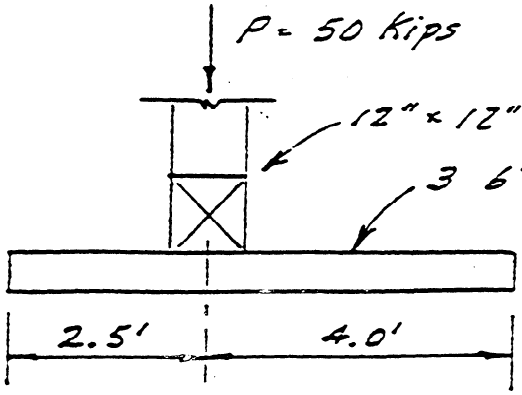


$$S = \frac{bh^2}{6} = \frac{(12 \times 4)(6)^2}{6} = 288 \text{ in}^3$$

Allow. soil pressure = 3000 psf

### Check Pad

1. Calculate adjusted effective length

$$L_{SYM} = t/12 + S/P = 12/12 + 288/50 = 6.76'$$

Adjusted effective length = 0.8(6.76) = 5.40'

2. Find limiting length on short side

Compare ½ of adj. eff. length and actual length

½(5.40) = 2.70 > 2.50 ; $L_1$ = pad length = 2.50'

Since $L_1$ = pad length on short side, pad is asymetrical for analysis.

3. Calculate limiting length on long side

$$L_{ASYM} = \frac{1}{2}\left(\frac{t}{24} + \frac{SF_b}{6000P}\right) + \sqrt{\frac{SF_b L_1}{6000P} - \frac{(t/12)^2}{16} + \left[\frac{1}{2}\left(\frac{t}{24} + \frac{SF_b}{6000P}\right)\right]^2}$$

$$L_{ASYM} = \frac{1}{2}\left(\frac{12}{24} + \frac{(288)(1500)}{(6000)(50)}\right) + \sqrt{\frac{(288)(1500)(2.5)}{(6000)(50)} - \frac{(12/12)^2}{16} + \left[\frac{1}{2}\left(\frac{12}{24} + \frac{(288)(1500)}{(6000)(50)}\right)\right]^2}$$

= 3.09' ; adjusted eff. length = 0.8(3.09) = 2.47'

Compare adjusted eff. length and pad length

2.47 < 4.0 ; $L_2$ = 2.47 = adj. eff. length

## Example 11B Continued

4. Calculate soil pressure

Bearing length $= L_1 + L_2 = 2.50 + 2.47 = 4.97'$

Soil pressure $= P/A = \frac{50000}{4(4.97)} = 2515$ psf

2515 < 3000 psf allowable OK

5. Calculate horiz shear on the long side

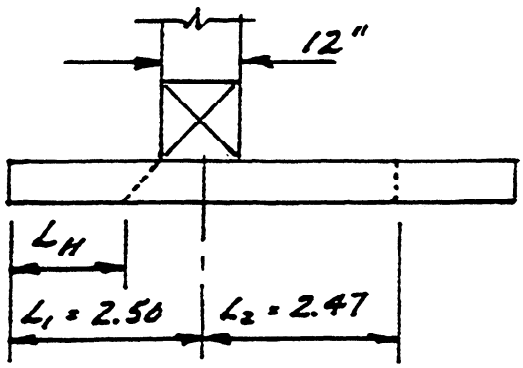


$L_H = 2.50 - \frac{6}{12} - \frac{6}{12} = 1.50'$

$V = (2515)(1.50)(4.0) = 15090$ lbs

$H = \frac{3V}{2A} = \frac{3(15090)}{2(4 \times 12)(6)} = 79$ psi

79 psi < 140 allow. OK

Note: in this example, the long side for the horizontal shear calculation is the $L_1$ side.

Check Corbel

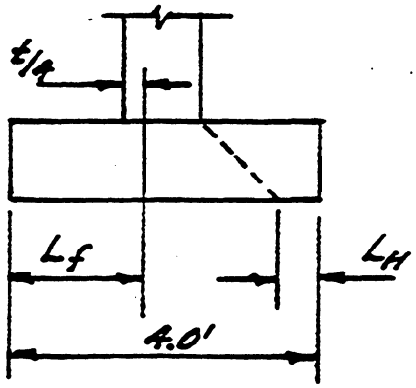


$w = \frac{50000}{4(1)} = 12500$ lbs/ft.

$S = \frac{bh^2}{6} = \frac{12(12)^2}{6} = 288$ in$^3$

$L_f = 2.0 - 0.5 + 0.25 = 1.75'$

$L_H = 2.0 - 0.5 - 1.0 = 0.5'$

1. Calculate compression perpendicular to grain

$f_c = \frac{P}{A} = \frac{50000}{12 \times 12} = 347$ psi

347 psi < 450 allowable OK

Example 11B Continued

2. Calculate stress due to horiz. shear

$$V = (12500)(0.5) = 6250 \text{ lbs}$$

$$H = \frac{3V}{2A} = \frac{(3)(6250)}{(2)(12 \times 12)} = 65 \text{ psi}$$

65 psi < 140 allowable OK

3. Calculate bending stress

$$M = \frac{wL^2}{2} = \frac{(12500)(1.75)^2}{2} = 19141 \text{ ft-lbs}$$

$$f_b = \frac{M}{S} = \frac{(19141)(12)}{288} = 798 \text{ psi}$$

798 psi < 1800 allowable OK

# EXAMPLE 12 CONTINUOUS PAD - INDIVIDUAL CORBELS

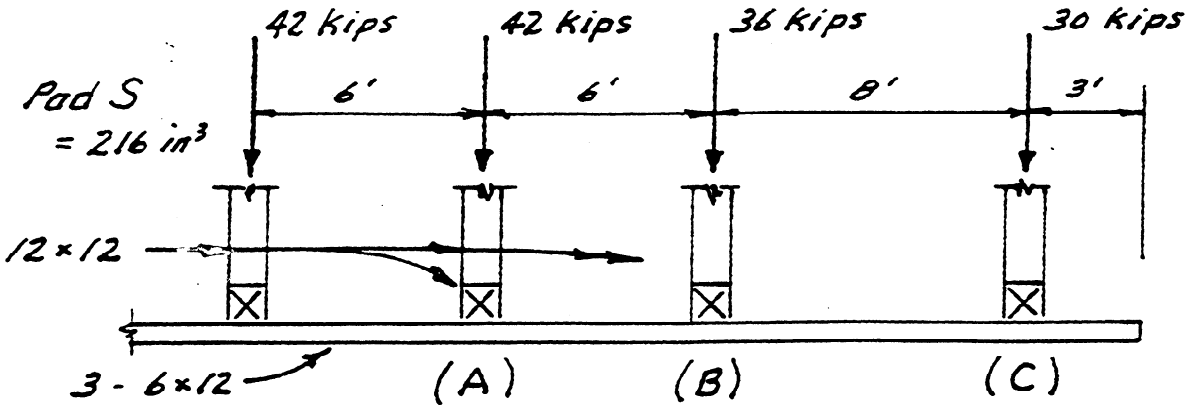


Allowable soil bearing value = 3000 psf

## Check Post A (Section 7-2.03A)

1. Calculate effective length of pad

$$L_e = \frac{t}{12} + \frac{S}{p} = \frac{12}{12} + \frac{216}{42} = 6.14'$$

2. Find bearing length

$L_e = 6.14'$

Post spacing = 6.00' (governs)

3. Calculate soil pressure

$$\text{Soil pressure} = \frac{P}{A} = \frac{42000}{3(6.00)} = 2333 \text{ psf}$$

2333 < 3000 allowable - OK

4. Calculate horiz. shear stress

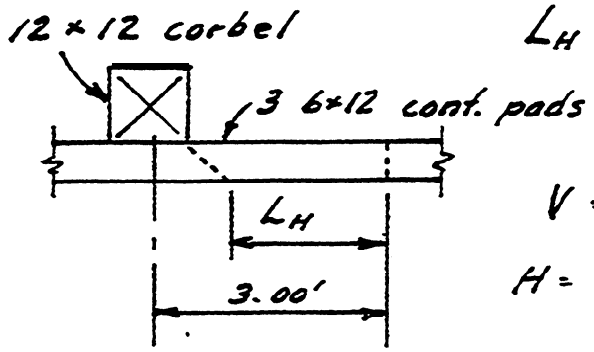


$$L_H = 3.00 - \frac{1.0}{2} - 0.5 = 2.00'$$

$$V = 3(2333 \times 2.00) = 13998 \text{ lbs.}$$

$$H = \frac{3V}{2A} = \frac{3(13998)}{2(6 \times 12 \times 3)} = 97 \text{ psi}$$

97 psi < 140 allow. OK

Revised 05/92

## Post A Continued

## Check Corbel

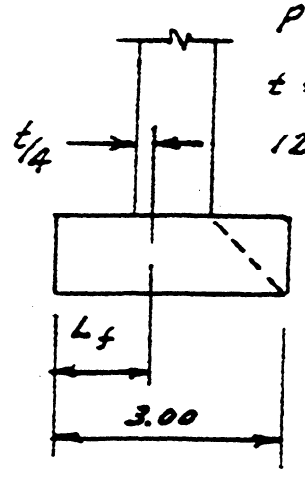


$P = 42000$ lbs

$t = 12''$

$12'' \times 12''$ corbel

$A = 12 \times 12 = 144 \ \square''$

$S = \frac{(12)(12)^2}{6} = 288 \ in^3$

$w = \frac{42000}{3} = 14000$ lbs

1. Calculate compression stress

$$f_c = \frac{P}{A} = \frac{42000}{144} = 292 \text{ psi}$$

292 psi < 450 allow. $C_\perp$ OK

2. Calculate horiz. shear stress

$H = 0$ psi (by inspection)

3. Calculate bending stress

$$L_f = 3.0/2 - 1.0/2 + 1.0/4 = 1.25'$$

$$M = \frac{wL^2}{2} = \frac{(14000)(1.25)^2}{2} = 10938 \text{ ft-lbs}$$

$$f_b = \frac{M}{S} = \frac{(10938)(12)}{288} = 456 \text{ psi}$$

456 psi < 1800 allow. OK

## Check Post B (Section 7-2.03 A)

1. Calculate effective length of pad

$$L_e = \frac{t}{12} + \frac{S}{P} = \frac{12}{12} + \frac{216}{36} = 7.00'$$

2. Find limiting length on short side (left side)

$$\frac{L_e}{2} = \frac{7.00}{2} = 3.50'$$

$$\frac{\text{post spacing}}{2} = \frac{6.00}{2} = 3.00$$

Compared values are unequal; therefore, system is asymmetrical for analysis.

$$L_1 = 3.00'$$

3. Calculate ASYM length

$$L_{ASYM} = \frac{1}{2}\left(\frac{12}{24} + \frac{(216)(1500)}{(6000)(36)}\right) + \sqrt{\frac{(216)(1500)(3.00)}{(6000)(36)} - \frac{(12/12)^2}{16} + \left[\frac{1}{2}\left(\frac{12}{24} + \frac{(216)(1500)}{(6000)(36)}\right)\right]^2}$$

$$= 3.36'$$

4. Find limiting length on long side

$1/2$ post spacing on right $= 8.00/2 = 4.00'$

$$L_{ASYM} = 3.36 = L_2$$

5. Calculate soil pressure

Bearing length $= L_1 + L_2 = 3.00 + 3.36 = 6.36'$

Soil pressure $= P/A = \frac{36000}{3(6.36)} = 1887$ psf

1887 psf < 3000 allow. OK

## Post B Continued

6. Calculate horiz. shear on long side

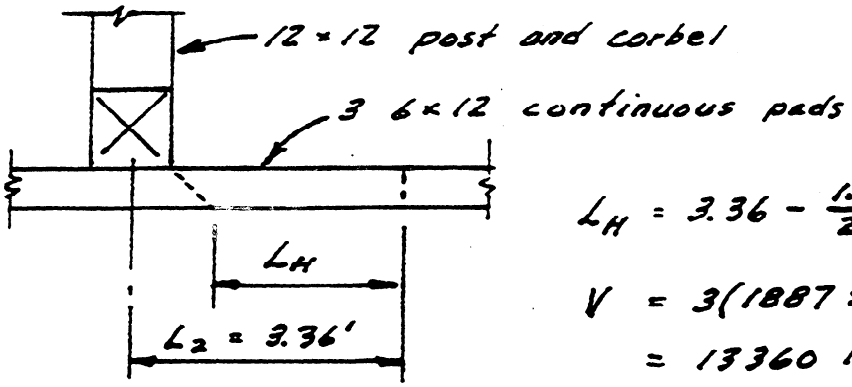


$$L_H = 3.36 - \frac{1.0}{2} - 0.5 = 2.36'$$

$$V = 3(1887 \times 2.36)$$
$$= 13360 \text{ lbs}$$

$$H = \frac{3V}{2A} = \frac{3(13360)}{2(6 \times 12 \times 3)} = 93 \text{ psi}$$

93 psi < 140 allow. OK

## Check Corbel

Corbel is OK by inspection

(Post load at B < post load at A)

## Check Post C (Section 7-2.03B)

1. Calculate effective length of pad

$$L_e = \frac{t}{12} + \frac{S}{P} = \frac{12}{12} + \frac{216}{30} = 8.20'$$

2. Find limiting length on outside of post

$$\frac{0.8L_e}{2} = \frac{0.8(8.20)}{2} = 3.28'$$

Edge distance = 3.00'

Compared distances are unequal; therefore, system is asymmetrical for analysis.

$$L_1 = 3.00'$$

## Post C Continued

3. Find preliminary limiting length on inside of post

$\frac{1}{2}(L_e) = \frac{1}{2}(8.20) = 4.10'$

$\frac{1}{2}$ (post spacing) $= \frac{1}{2}(8.00) = 4.00 = PL_2$

4. Calculate ASYM length

From ASYM formula, $L_{ASYM} = 3.74'$

5. Find limiting length on inside of post

$PL_2$ (step 3) $= 4.00'$

$L_{ASYM} = 3.74' = L_2$

6. Calculate soil pressure

Bearing length $= L_1 + L_2 = 3.00 + 3.74 = 6.74'$

Soil pressure $= \frac{P}{A} = \frac{30000}{3(6.74)} = 1484$ psf

1484 psf < 3000 allow. OK

7. Calculate horiz shear stress on long side

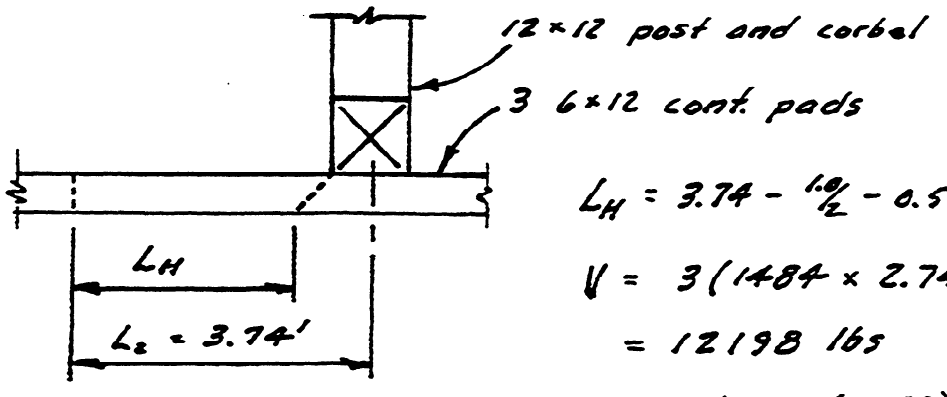


$L_H = 3.74 - \frac{1.0}{2} - 0.5 = 2.74'$

$V = 3(1484 \times 2.74)$

$= 12198$ lbs

$H = \frac{3V}{2A} = \frac{3(12198)}{2(216)} = 85$ psi

85 psi < 140 allow. OK

## Check Corbel

Corbel OK by inspection (Load at ℄ < load at A)

# EXAMPLE 13 CONTINUOUS PAD - MULTIPLE CORBELS

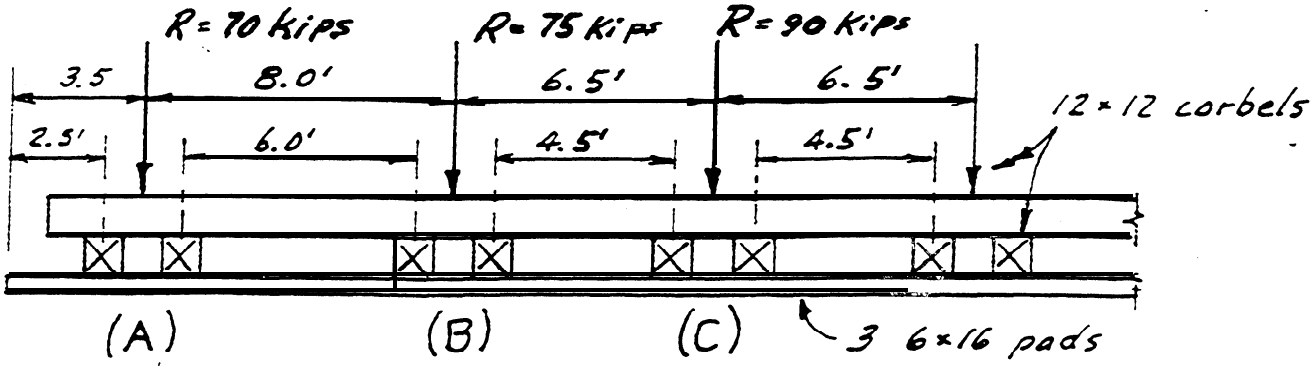


$S_{pad} = 288 \text{ in}^3$

R = total vertical load reaction

Allow. soil brg. value = 4000 psf.

## Check Exterior Post A [Section 7-2.03C(2)]

1. Calculate effective length of pad

$$L_e = \frac{t}{12} + \frac{S}{P} = \frac{12}{12} + \frac{288}{70} = 5.11'$$

2. Find limiting length on outside of post

Edge distance = 2.50'

$$\frac{0.8L_e}{2} = \frac{0.8(5.11)}{2} = 2.04'$$

Compared values are unequal; therefore, system is asymmetrical for analysis

$L_1 = 2.04'$

3. Find preliminary limiting length on inside of post

$\frac{1}{2}$(corbel spacing) = $\frac{1}{2}(6.0) = 3.00'$

$\frac{1}{2}(L_e) = \frac{1}{2}(5.11) = 2.56' = PL_2$

4. Find fictitious limiting length

Edge distance + m = 2.50 + 2.0 = 4.50'

(m = distance between corbel centerlines)

$\frac{1}{2}(0.8L_e) = \frac{1}{2}(0.8)(5.11) = 2.04 = FL_1$

## Post A Continued

5. Calculate ASYM length

From AYSM formula, $L_{ASYM} = 2.40'$

6. Find limiting length on inside of post

$PL_2$ (step 3) $= 2.56'$

$L_{ASYM} = 2.40' < 2.56'$ ; $L_2 = 2.40'$

7. Calculate soil pressure

Bearing length $= L_1 + m + L_2$

$= 2.04 + 2.00 + 2.40 = 6.44'$

Bearing area $= 4(6.44) = 25.76\ \square'$

Soil pressure $= \frac{P}{A} = \frac{70000}{25.76} = 2717$ psf

$2717 < 4000$ allowable - OK

8. Calculate horiz. shear on long side

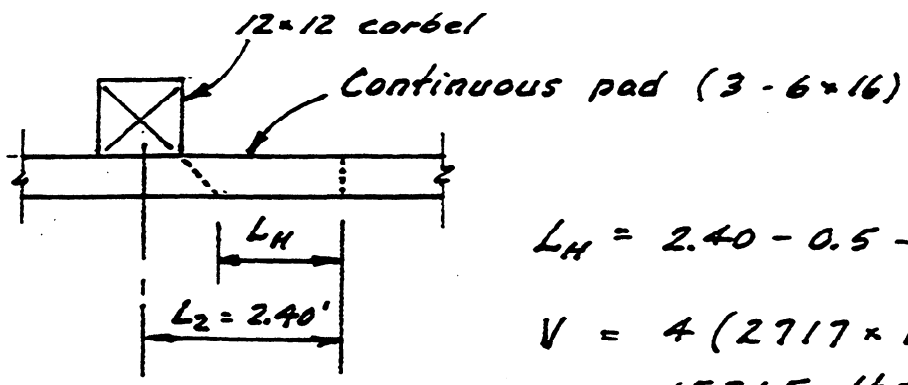


$L_H = 2.40 - 0.5 - 0.5 = 1.40'$

$V = 4(2717 \times 1.40)$

$= 15215$ lbs.

$H = \frac{3V}{2A} = \frac{3(15215)}{2(6 \times 16 \times 3)} = 79$ psi

79 psi < 140 allow. OK

## Post A Continued

### Check Corbels

Assume total vertical load is distributed equally to the two corbels.

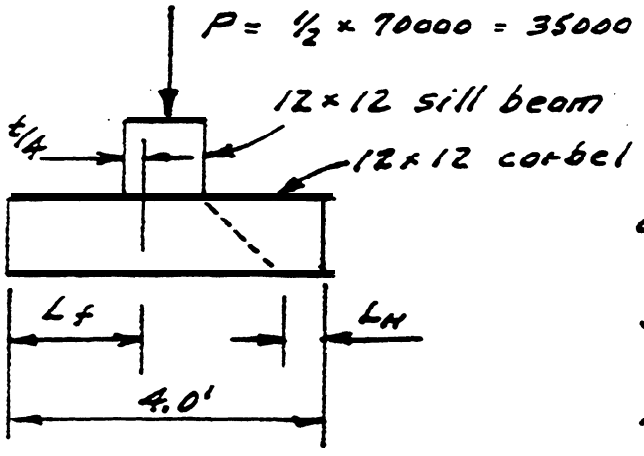


$$w = \frac{35000}{4} = 8750 \text{ lbs/foot}$$

$$S = \frac{(12)(12)^2}{6} = 288 \text{ in}^3$$

$$A = (12 \times 12) = 144 \text{ in}^2$$

1. Calculate compression perpendicular to grain

$$f_c = \frac{P}{A} = \frac{35000}{12 \times 12} = 243 \text{ psi}$$

243 psi < 450 allow. OK

2. Calculate horiz. shear stress

$$L_H = 4.0/2 - 0.5 - 1.0 = 0.5'$$

$$V = 0.5 \times 8750 = 4375 \text{ lbs}$$

$$H = \frac{3V}{2A} = \frac{3(4375)}{2(144)} = 46 \text{ psi}$$

46 psi < 140 psi allow. OK

3. Calculate bending stress

$$L_f = 4.0/2 - 1.0/2 + 1.0/4 = 1.75'$$

$$M = \frac{wL^2}{2} = \frac{(8750)(1.75)^2}{2} = 13398 \text{ ft-lbs}$$

$$f_b = \frac{M}{S} = \frac{(13398)(12)}{288} = 558 \text{ psi}$$

558 psi < 1800 allow. OK

## Check Interior Post B [Section 7-2.03C(1)]

1. Calculate effective length of pad

$$L_e = \frac{t}{12} + \frac{S}{P} = \frac{12}{12} + \frac{288}{75} = 4.84'$$

2. Find limiting length on short (right) side

$$\frac{L_e}{2} = \frac{4.84}{2} = 2.42'$$

$$\frac{\text{corbel spacing}}{2} = \frac{4.50}{2} = 2.25' = L_1$$

Compared values are unequal; therefore, system is asymmetrical for analysis.

3. Find fictitious limiting length

$\frac{1}{2}$ corbel spacing + $m$ = 2.25 + 2.00 = 4.25

($m$ = distance between corbel centerlines)

$L_e/2$ (from step 2) = 2.42' = $FL_1$

4. Calculate ASYM length

From ASYM formula, $L_{ASYM} \doteq 2.40'$

5. Find limiting length on long side

$\frac{1}{2}$ corbel spacing = $\frac{1}{2}$ (6.0) = 3.00'

$L_{ASYM}$ = 2.40' = $L_2$

6. Calculate soil pressure

Bearing length = $L_1 + m + L_2$

= 2.25 + 2.00 + 2.40 = 6.65'

Bearing area = 4 (6.65) = 26.6 $\square'$

$$\text{Soil pressure} = \frac{P}{A} = \frac{75000}{26.6} = 2820 \text{ psf}$$

2820 < 4000 allowable - OK

## Post B Continued

7. Calculate horiz. shear stress on long side

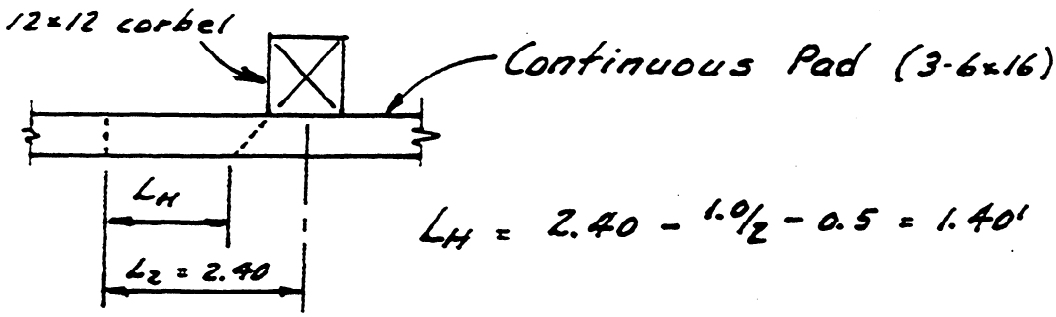


$L_H = 2.40 - 1.0/2 - 0.5 = 1.40'$

$V = 4(2820)(1.40) = 15792$ lbs.

$$H = \frac{3V}{2A} = \frac{3(15792)}{2(6 \times 16 \times 3)} = 82 \text{ psi}$$

82 psi < 140 allowable - OK

## Check Corbels

Corbels are OK by inspection.

(Note: Post B corbel is same as Post A corbel; therefore, stresses are proportional to the applied load. Critical stress is $C_\perp$ so that:

$C_\perp$ (Post B) = $75/70$ (243) = 260 psi )

## Check Interior Post C [Section 7-2.03C(1)]

1. Calculate effective length of pad

$$L_e = \frac{t}{12} + \frac{S}{P} = \frac{12}{12} + \frac{288}{90} = 4.20'$$

2. Find limiting length

$$\tfrac{1}{2} \text{ corbel spacing} = \tfrac{1}{2}(4.5) = 2.25'$$

$$L_e/2 = 4.20/2 = 2.10' = L_1 = L_2$$

3. Calculate soil pressure

$$\text{Bearing length} = L_1 + m + L_2$$

$$= 2.10 + 2.00 + 2.10 = 6.20'$$

($m$ = distance between corbel centerlines)

$$\text{Bearing area} = 4(6.20) = 24.8\ \square'$$

$$\text{Soil pressure} = \frac{P}{A} = \frac{90000}{24.8} = 3629 \text{ psf}$$

4. Calculate horiz. shear stress

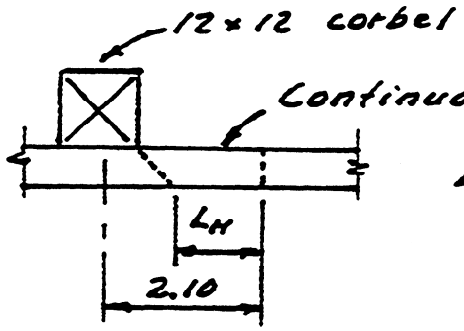


$$L_H = 2.10 - 1.0/2 - 0.5 = 1.10'$$

$$V = 4(3629 \times 1.1) = 15968 \text{ lbs}$$

$$H = \frac{3V}{2A} = \frac{3(15968)}{2(6 \times 16 \times 3)} = 83 \text{ psi}$$

83 psi < 140 allowed <u>OK</u>

## Check Corbels

Corbels OK by inspection

(See page D-13-5. $C_L = 90/70\,(243) = 312$ psi.)

# EXAMPLE 14

## Investigate Adequacy of Timber Pile Bent Design

### Example 14A (Type I Bent)

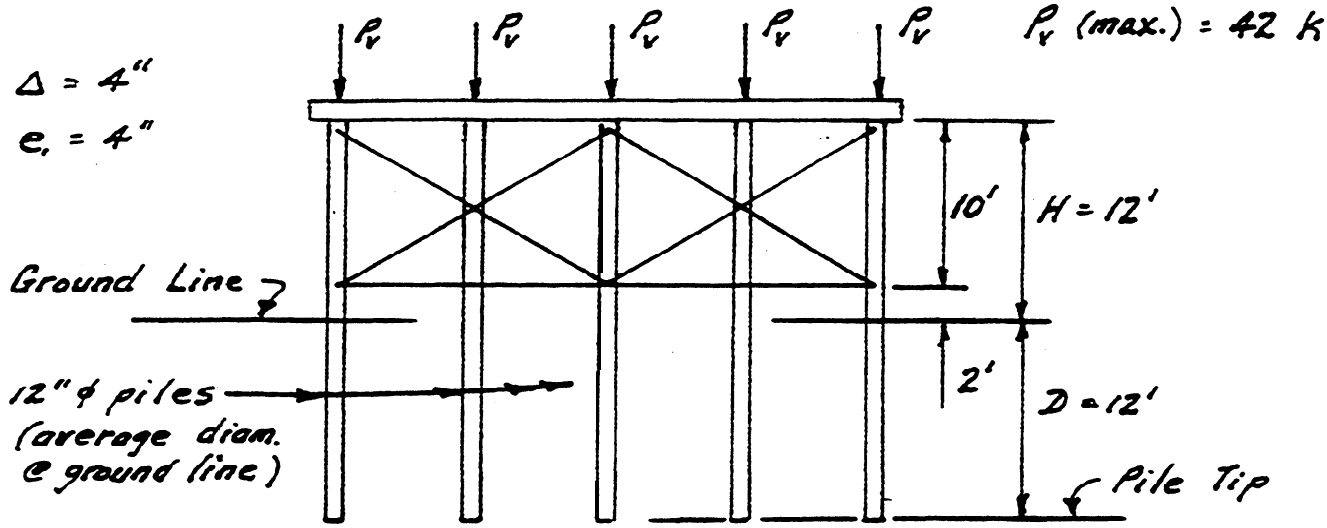


### Preliminary Calculations and Assumptions

1. Pile properties (12"ϕ pile ; r = 6")

$A = \pi r^2 = 113 \text{ in}^2$

$S = \frac{\pi r^3}{4} = 170 \text{ in}^3$

$I = \frac{\pi r^4}{4} = 1018 \text{ in}^4$

2. Required Pile Penetration (Section 7-3.02A)

Minimum $D/H = 0.75$ ; design $D/H = 12/12 = 1.0$ OK

Minimum D for construction = (0.75)(12.0) = 9.0'

3. Soil Relaxation Factor (Section 7-3.02D)

Assume average soil and 30-day time period.

From Soil Factor Chart (Fig. 7-10) R = 1.25

4. Point of Pile Fixity (Section 7-3.02B)

$Y_1$ = (4)(pile diam. @ ground line) = (4)(1.0) = 4.0'

$Y_2$ = ($Y_1$)(soil relax. factor) = (4.0)(1.25) = 5.0'

Revised 05/92

## Preliminary Calculations Continued

5. Driving Tolerances (Section 7-3.02C)

Max. pile pull = $\Delta$ = 4"
Max pile lean = $e_1$ = 4"
} Values from F/W drawings

6. Modulus of Elasticity (Section 7-3.02E)

Assume E = 1,600,000 psi

## Investigate Effect of Pile Pull

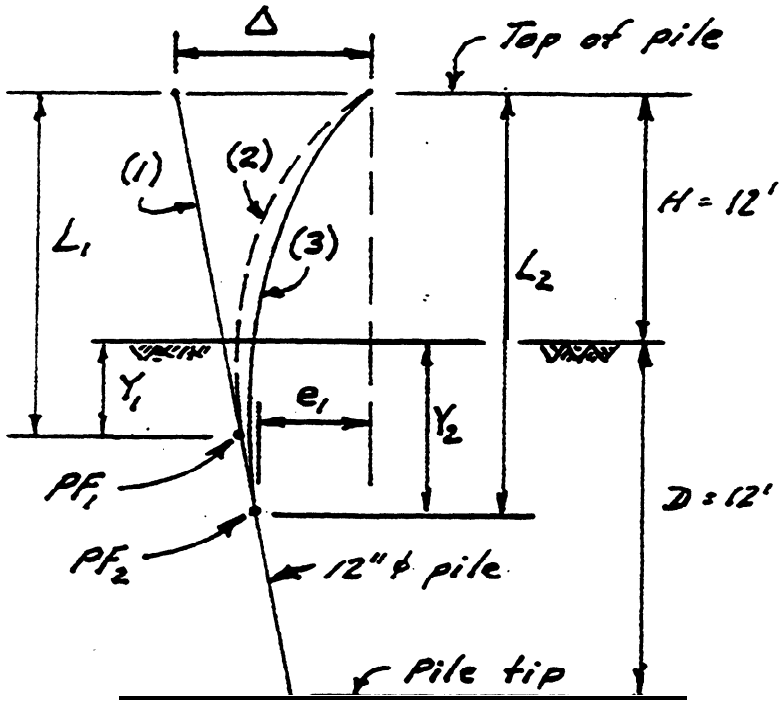


$\Delta$ = 4"  $e_1$ = 4"

(1) = Driven position
(2) = Initial pulled position
(3) = Position when $P_v$ is applied

$L_1 = H + Y_1 = 12.0 + 4.0 = 16.0'$

$L_2 = H + Y_2 = 12.0 + 5.0 = 17.0'$

Pile Schematic (no scale)

1. Calculate $F_1$ = force to pull pile into line

$$F_1 = \frac{3EI\Delta}{(12L_1)^3} = \frac{3(1.6\times10^6)(1018)(4)}{(12\times16.0)^3} = 2762 \text{ lbs.}$$

2. Calculate the initial bending stress

$$f_{bp(1)} = \frac{F_1(12L_1)}{S} = \frac{(2762)(12\times16)}{170} = 3119 \text{ psi}$$

3119 psi < 4000 psi allowed. OK

Revised 05/92

## Pile Pull Continued

3. Calculate $F_2$ = force after soil relaxes

$$F_2 = \frac{F_1 (L_1)^3}{(L_2)^3} = \frac{2762\,(16.0)^3}{(17.0)^3} = 2303 \text{ lbs.}$$

4. Calculate final bending stress

$$f_{bp(2)} = \frac{F_2\,(12 L_2)}{S} = \frac{2303\,(12 \times 17.0)}{170} = 2762 \text{ psi}$$

## Evaluate System Adequacy (Section 7-3.03E)

1. Determine bent type

$L_u = Y_2 + (12.0 - 10.0) = 5.0 + 2.0 = 7.0'$

$L_u/d = 7.0/1.0 = 7 < 8$ ; $\therefore$ Type I bent

Do not consider design H (Section 7-3.03C)

2. Calc. stress due to vertical load eccentricity

$$f_{be(1)} = \frac{(P_v Y_{e_1})}{S} = \frac{(42000)(4)}{170} = 988 \text{ psi}$$

3. Calc. stress due to axial compression

$$f_c = \frac{P_v}{A} = \frac{42000}{113} = 372 \text{ psi}$$

4. Determine allowable compressive stress

Note: bent supported at the cap in the longitudinal direction.

$L_u$ (in longitudinal direction) $= L_2 = 17.0'$

Equivalent "d" $= \sqrt{A} = \sqrt{113} = 10.6''$

$$L_u/d = \frac{\cancel{170 \times 12}}{10.6} = 19.25$$

$$F_c = \frac{\cancel{480,000}}{(19.25)^2} = 1295 \text{ psi}$$

## System Adequacy Continued

5. Solve combined stress expression

$$\frac{f_{bp(2)} + 2f_{be(1)}}{3F_b} + \frac{2f_c}{3F_c} \not< 1.0$$

$$\frac{2762 + 2(988)}{3(1800)} + \frac{2(372)}{3(1295)}$$

$$0.88 + 0.19 = 1.07 > 1.0$$

System fails !!

Options available to make system adequate:

(a) use larger diameter pile

(b) reduce allowable values for $\Delta$ and/or $e_1$

(c) shorten F/W span to reduce $P_v$

Contractor resubmits design using 14"$\phi$ piles.

| New pile properties | New design values |
|---|---|
| $A = 154\ in^2$ | $Y_1 = (4)(14/12) = 4.67'$ |
| $S = 269\ in^3$ | $Y_2 = (1.25)(4.67) = 5.83'$ |
| $I = 1886\ in^4$ | $L_1 = H + 4.67 = 16.67'$ |
| | $L_2 = H + 5.83 = 17.83'$ |

## Investigate Effect of Pile Pull

(Refer to sketch on page D-14-2 and previous calcs.)

$$F_1 = \frac{3EI\Delta}{(12L_1)^3} = \frac{3(1.6\times10^6)(1886)(4)}{(12\times16.67)^3} = 4524\ lbs.$$

$$f_{bp(1)} = \frac{F_1(12L_1)}{S} = \frac{(4524)(12\times16.67)}{269} = 3364\ psi$$

3364 < 4000 psi allowable **OK**

$$F_2 = \frac{F_1(L_1)^3}{(L_2)^3} = \frac{(4524)(16.67)^3}{(17.83)^3} = 3697\ lbs.$$

$$f_{bp(2)} = \frac{F_2(12L_2)}{S} = \frac{(3697)(12\times17.83)}{269} = 2941\ psi$$

## Evaluate System Adequacy

Check bent type -

$L_u$ = new $Y_2$ + (12.0 - 10.0) = 5.83 + 2.0 = 7.83'

$L_u/d = \frac{(7.83)(12)}{14} = 6.71 < 8$ **still Type I bent**

$$f_{be(1)} = \frac{(P_v)(e_1)}{S} = \frac{(42000)(4)}{269} = 625 \text{ psi}$$

$$f_c = \frac{P_v}{A} = \frac{42000}{154} = 273 \text{ psi}$$

Allowable $F_c$ -

$L_u$ (longitudinal direction governs) = $L_2$ = 17.83'

Equivalent "d" = $\sqrt{154}$ = 12.4"

$L_u/d = \frac{17.83 \times 12}{12.4} = 17.25$

$$F_c = \frac{480000}{(17.25)^2} = 1613 \text{ psi} > 1600 \text{ psi}$$ use

Solve combined stress expression -

$$\frac{f_{bp(2)} + 2f_{be(1)}}{3F_b} + \frac{2f_c}{3F_c} = \frac{2941 + 2(625)}{3(1800)} + \frac{2(273)}{3(1600)}$$

$$= 0.78 + 0.11 = 0.89 < 1.0$$

**System is now adequate**

## Example 14B (Type II Bent)

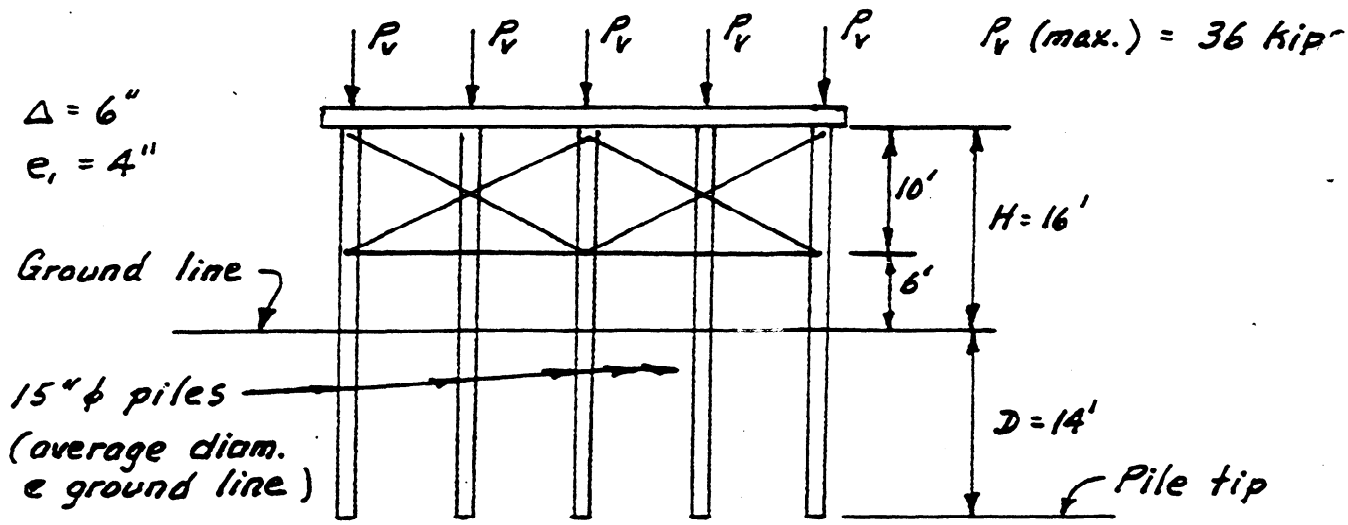


## Preliminary Calculations and Assumptions

1. **Pile properties** (15" ϕ pile; r = 7.5")

   $A = \pi r^2 = 177 \text{ in}^2$

   $S = \pi r^3/4 = 331 \text{ in}^3$

   $I = \pi r^4/4 = 2485 \text{ in}^4$

2. **Required pile penetration** (Section 7-3.02A)

   Minimum $D/H = 0.75$ ; design $D/H = 14/16 = 0.875$ **OK**

   Minimum D for construction = (0.75)(16.0) = 12.0'

3. **Soil relaxation factor** (Section 7-3.02D)

   Assumptions: (1) normal (average) soil
   (2) 30-day time period

   From Soil Factor Chart (Figure 7-12) R = 1.25

4. **Point of pile fixity** (Section 7-3.02B)

   $Y_1$ = (4)(ground line pile diameter) = (4)(1.25) = 5.0'

   $Y_2$ = ($Y_1$)(soil relax. factor) = (5.0)(1.25) = 6.25'

5. <u>Driving tolerances</u> (Section 7-3.02C)

Max. pile pull = $\Delta$ = 6" } from F/W drawings
Max. pile lean = $e_1$ = 4"

6. <u>Modulus of elasticity</u> (Section 7-3.02E)

Assume $E$ = 1,600,000 psi

## Effect of Pile Pull (Section 7-3.03A)

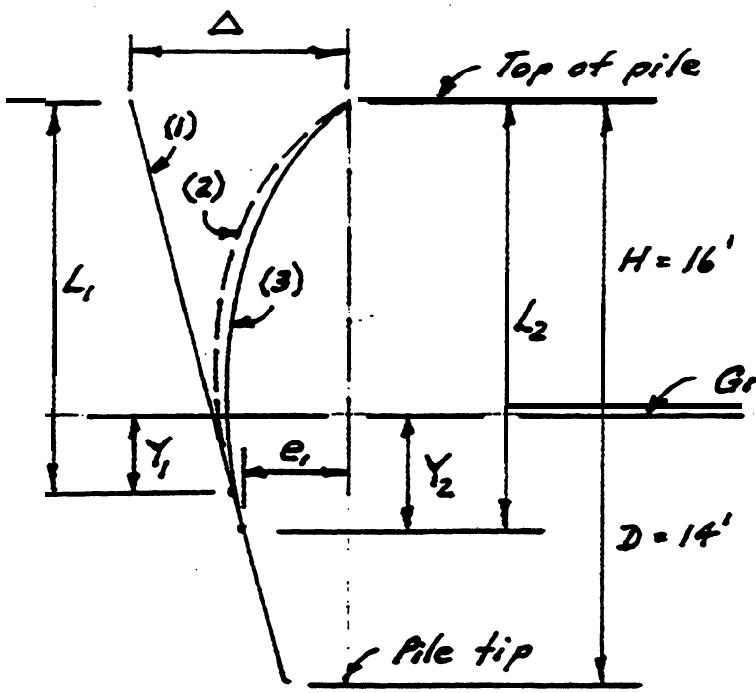


(1) Driven position

(2) Initial pulled position

(3) Position when $P_v$ is applied

$Y_1 = 5.0'$ ; $Y_2 = 6.25'$

$L_1 = H + Y_1 = 21.0'$

$L_2 = H + Y_2 = 22.25'$

Pile Schematic (no scale)

1. <u>Calculate force to pull pile into line</u>

$$F_1 = \frac{3EI\Delta}{(12L)^3} = \frac{3(1.6 \times 10^6)(2485)(6)}{(12 \times 21.0)^3} = 4472 \text{ lbs.}$$

2. <u>Calculate the initial bending stress</u>

$$f_{bp(1)} = \frac{(F_1)(12L_1)}{S} = \frac{(4472)(12 \times 21.0)}{331} = 3405 \text{ psi}$$

3405 psi < 4000 psi allowed - <u>OK</u>



Revised 05/92

## Pile Pull Continued

3. Calculate force remaining when $P_v$ is applied

$$F_2 = \frac{F_1 (L_1)^3}{(L_2)^3} = \frac{4472\,(21.0)^3}{(22.25)^3} = 3760 \text{ lbs.}$$

4. Calculate relaxed bending stress

$$f_{bp(2)} = \frac{F_2 (12 L_2)}{S} = \frac{3760\,(12 \times 22.25)}{331} = 3033 \text{ psi}$$

## Evaluate System Adequacy (Section 3.03E)

1. Determine bent type

$$L_u = Y_2 + (16.0 - 10.0) = 6.25 + 6.0 = 12.25'$$

$$L_u/d = \frac{12.25}{1.25} = 9.8 \qquad \therefore \text{ Type II bent}$$

Consider H but not P-delta (Section 7-3.03C)

2. Calculate stress due to pile lean

$$f_{be(1)} = \frac{P_v (e_1)}{S} = \frac{36000\,(4)}{331} = 435 \text{ psi}$$

3. Calculate stress due to design H

$$H = (0.02 \times 36000) = 720 \text{ lbs.}$$

$$f_{bH} = \frac{(H)(12 L_u)}{S} = \frac{(720)(12.25 \times 12)}{331} = 320 \text{ psi}$$

4. Calculate horiz. displacement

$$X = \frac{H(12 L_u)^3}{3EI} = \frac{720\,(12 \times 12.25)^3}{3(1.6 \times 10^6)(2485)} = 0.19'' = e_2$$

5. Calculate stress due to additional $P_v$ eccentricity

$$f_{be(2)} = \frac{P_v (e_2)}{S} = \frac{36000\,(0.19)}{331} = 21 \text{ psi}$$

## System Adequacy Continued

5. Calculate stress due to axial compression

$$f_c = \frac{P_v}{A} = \frac{36000}{177} = 203 \text{ psi}$$

6. Determine allowable compressive stress

Bent is supported at the cap in the longitudinal direction.

$L_u$ (in longitudinal direction) $= L_2 = 22.25'$

Equivalent "d" $= \sqrt{A} = \sqrt{177} = 13.3''$

$$L_u/d = \frac{12 \times 22.25}{13.3} = 20.1$$

$$F_c = \frac{480,000}{(20.1)^2} = 1188 \text{ psi}$$

7. Check pile adequacy using combined stress expression

$$\frac{f_{bp(2)} + 2f_{be(1)} + 2(f_{bH} + f_{be(2)})}{3F_b} + \frac{2f_c}{3F_c} \not> 1.0$$

$$\frac{3033 + 2(435) + 2(320 + 21)}{3(1800)} + \frac{2(203)}{3(1188)}$$

$$0.85 + 0.11 = 0.96$$

System is adequate

## Example 14C (Type III Bent)

$\Delta = 6''$; $e_1 = 6''$

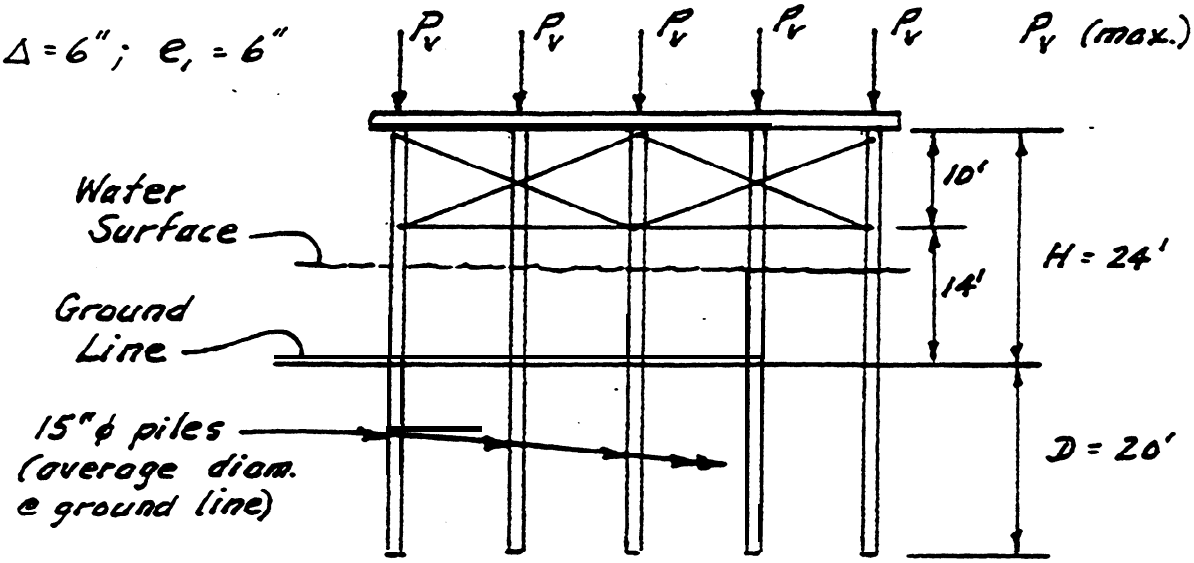


### Preliminary Calculations and Assumptions

1. **Pile properties** (15" ϕ pile; r = 7.5")

   $A = \pi r^2 = 177 \text{ in}^2$

   $S = \pi r^3/4 = 331 \text{ in}^3$

   $I = \pi r^4/4 = 2485 \text{ in}^4$

2. **Required pile penetration** (Section 7-3.02A)

   Minimum $D/H = 0.75$; design $D/H = 20/24 = 0.83$ **OK**

   Minimum D for construction = (0.75)(24) = 18.0'

3. **Soil relaxation factor** (Section 7-3.02D)

   Assumptions: (1) normal (average) soil
   (2) 30-day time period

   From Soil Factor Chart (Figure 7-12) R = 1.25

4. **Point of pile fixity** (Section 7-3.02B)

   $Y_1$ = (4)(ground line pile diam.) = (4)(1.25) = 5.0'

   $Y_2$ = ($Y_1$)(soil relax. factor) = (5.0)(1.25) = 6.25'

5. <u>Driving tolerances</u> (Section 7-3.02C)

Max. pile pull = $\Delta$ = 6" } values from F/W drawings
Max. pile lean = $e_1$ = 6"

6. <u>Modulus of elasticity</u> (Section 7-3.02E)

Assume E = 1,600,000 psi

## Effect of Pile Pull (Section 7-3.03A)

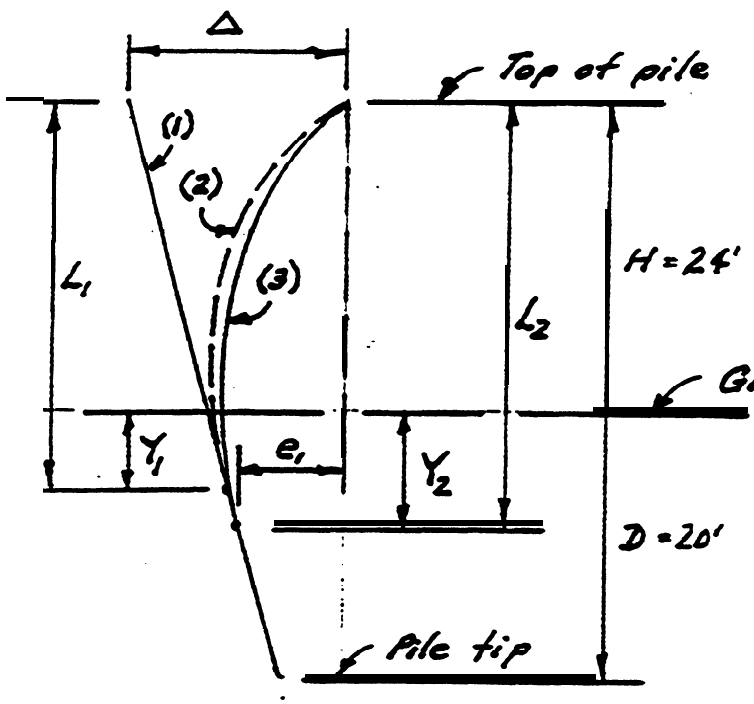


(1) Driven position

(2) Initial pulled position

(3) Position when $P_v$ is applied

$Y_1 = 5.0'$ ; $Y_2 = 6.25'$

$L_1 = H + Y_1 = 29.0'$

$L_2 = H + Y_2 = 30.25'$

Pile Schematic (no scale)

1. <u>Calculate force to pull pile into line</u>

$$F_1 = \frac{3EI\Delta}{(12L_1)^3} = \frac{3(1.6\times10^6)(2485)(6)}{(12\times29.0)^3} = 1698 \text{ lbs.}$$

2. <u>Calculate the initial bending stress</u>

$$f_{bp(1)} = \frac{F_1(12L_1)}{S} = \frac{(1698)(12\times29.0)}{331} = 1785 \text{ psi}$$

1785 < 4000 psi allowed - <u>OK</u>

## Pile Pull Continued

3. Calculate force remaining when $P_v$ is applied

$$F_2 = \frac{F_1 (L_1)^3}{(L_2)^3} = \frac{(1698)(29.0)^3}{(30.25)^3} = 1496 \text{ lbs}$$

4. Calculate the relaxed bending stress

$$f_{bp(2)} = \frac{F_2 (12 L_2)}{S} = \frac{(1496)(12 \times 30.25)}{331} = 1640 \text{ psi}$$

## Evaluate System Adequacy (Section 7-3.03E)

1. Determine bent type

$$L_u = Y_2 + (24.0 - 10.0) = 6.25 + 14.0 = 20.25'$$

$$L_u/d = \frac{20.25}{1.25} = 16.2 > 15, \quad \therefore \text{ Type III Bent}$$

Consider P-delta effect (Section 7-3.03D)

2. Calculate stress due to pile lean

$$f_{be_1} = \frac{P_v (e_1)}{S} = \frac{(32000)(6)}{331} = 580 \text{ psi}$$

3. Calculate stress due to design H

$$H = (0.02)(32{,}000) = 640 \text{ lbs.}$$

$Y_2 + (24-10)$

$$f_{bH} = \frac{H (12 \times L_u)}{S} = \frac{(640)(12 \times 20.25)}{331} = 470 \text{ psi}$$

4. Calculate horizontal component of $P_v$ reaction

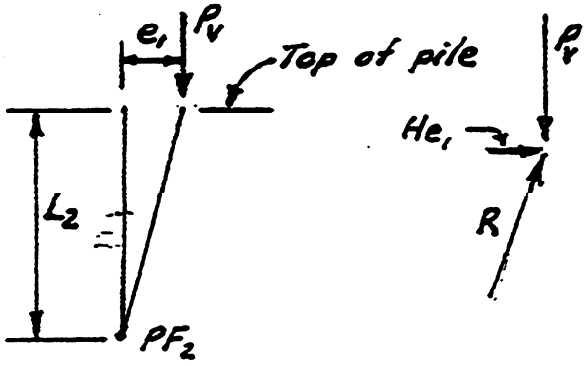


$$He_1 = \frac{P_v (e_1)}{12 L_2}$$

$$He_1 = \frac{(32000)(6)}{(12)(30.25)} = 529 \text{ lbs.}$$

Revised 05/92

## System Adequacy Continued

5. Calculate total horizontal displacement ($e_3$)

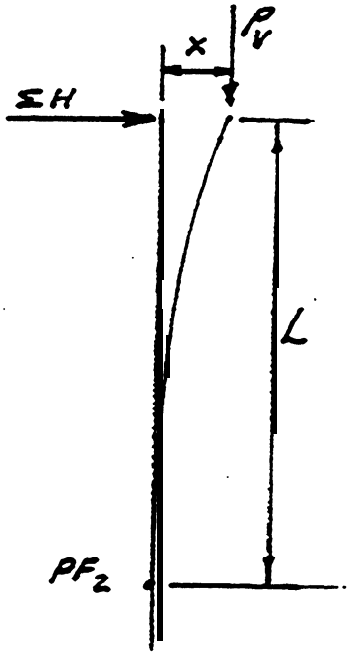


$x$ = displacement due to total H load

$$x = \frac{\Sigma H (L)^3}{3EI}$$

$\Sigma H$ = design H + $He_1$

$= 640 + 529 = 1169$ lbs.

$L = Y_2 + (24 - 10) = 20.25' = 243''$

$3EI = 3(1.6 \times 10^6)(2485)$

$= 1.193 \times 10^{10}$

Refer to Section 7-3.03D and Figure 7-15

$$x = \frac{(1169)(243)^3}{3EI} = 1.41'' \qquad H_1 = 1169 + \frac{(32000)(1.41)}{243} = 1355 \text{ lbs.}$$

$$x_1 = \frac{(1355)(243)^3}{3EI} = 1.63'' \qquad H_2 = 1355 + \frac{(32000)(1.63-1.41)}{243} = 1384 \text{ lbs}$$

$$x_2 = \frac{(1384)(243)^3}{3EI} = 1.66''$$

Values within 5 % **STOP**

6. Calculate bending stress due to $\Sigma H$ displacement

$$f_{be_3} = \frac{P_v(e_3)}{S} = \frac{(32000)(1.66)}{331} = 160 \text{ psi}$$

7. Calculate stress due to axial compression

$$f_c = \frac{P_v}{A} = \frac{32000}{177} = 181 \text{ psi}$$

## System Adequacy Continued

8. Determine allowable compressive stress

Bent is supported at the cap in the longitudinal direction.

$L_u$ (in longitudinal direction) $= L_2 = 30.25'$

Equivalent "d" $= \sqrt{A} = \sqrt{177} = 13.3''$

$$L_u/d = \frac{12 \times 30.25}{13.3} = 27.3$$

$$F_c = \frac{480000}{(27.3)^2} = 644 \text{ psi}$$

9. Check pile adequacy using combined stress expression

$$\frac{f_{bp(2)} + 2f_{be(1)} + 2(f_{bH} + f_{be(3)})}{3F_b} + \frac{2f_c}{3F_c} \not> 1.0$$

$$\frac{1640 + 2(580) + 2(470 + 160)}{3(1800)} + \frac{2(181)}{3(644)}$$

$$0.75 + 0.19 = 0.94$$

System is adequate

# EXAMPLE No. 15A

## Failure of Pile to Attain Required Penetration

Pile in Example 14A (revised design using 14" piles) penetrates only 7.5 feet vs. 9.0 feet (minimum) required. No change in pile pull or lean values. (Refer to Section 7-3.04A.)

1. Find new value for $L_2$

New $D/H = 7.5/12 = 0.625$

From Figure 7-17, "Q" = 1.11 (for normal soil)

New $L_2 = H + (Q)(Y_2) = 12 + (1.11)(5.83) = 18.47'$

2. Calculate $f_{bp(2)}$ using new $L_2$

$$F_2 = \frac{3EI\Delta}{(12L_2)^3} = \frac{3(1.6 \times 10^6)(1086)(4)}{(12 \times 18.47)^3} = 3326 \text{ lbs.}$$

$$f_{bp(2)} = \frac{F_2(12L_2)}{S} = \frac{(3326)(12 \times 18.47)}{269} = 2740 \text{ psi}$$

3. Check bent type

New $L_u$ = 2.0 + new $Y_2$ = 2.0 + (1.11)(5.83) = 8.47'

$L_u/d = \frac{8.47 \times 12}{14} = 7.27 < 8.0$ Still type I bent

4. Evaluate system adequacy

$f_{be(1)}$ and $f_c$ are unchanged.

$L_u = L_2 = 18.47'$ (longitudinal direction governs)

$L_u/d = \frac{18.47}{12.4} = 17.87$ ← no change

$$F_c = \frac{480000}{(17.87)^2} = 1503 \text{ psi}$$

Solve combined stress expression –

$$\frac{f_{bp(2)} + 2f_{be(1)}}{3F_b} + \frac{2f_c}{3F_c} \not> 1.0$$

Values from 14A calcs.

$$\frac{2740 + 2(625)}{3(1800)} + \frac{2(273)}{3(1503)} = 0.74 + 0.12 = 0.86 \text{ OK}$$

Revised 05/92

# EXAMPLE 15B

Assume critical pile in Example 14B pile bent has the following as-driven values:

| | Planned | Actual |
|---|---|---|
| $D$ | 12' (min.) | 10' |
| $\Delta$ | 6" (max.) | 6" |
| $e_1$ | 4" (max.) | 8" at 60° angle (relative brg.) with $\Delta$ |

## Check Pile Capacity (See Section 7-3.04)

1. Check adequacy of pile penetration

$D/H = 10/16 = 0.625, \quad 0.75 > 0.625 > 0.45$ Find "Q"

From Figure 7-17, "Q" = 1.11 (for normal soil)

2. Find new values for $Y_2$ and $L_2$

New $Y_2 = Q \times Y_2 = (1.11)(6.25) = 6.94'$

New $L_2 = H + \text{new } Y_2 = 16.0 + 6.94 = 22.94'$

3. Check bent type

$L_u = 6.0 + \text{new } Y_2 = 12.94'$

$L_u/d = \dfrac{(12.94)(12)}{15} = 10.35$ Still Type II bent

4. Calculate stress due to pile pull

$$F_2 = \frac{3EI\Delta}{(12L_2)^3} = \frac{3(1.6 \times 10^6)(2485)(6)}{(12 \times 22.94)^3} = 3431 \text{ lbs.}$$

$$f_{bp(2)} = \frac{F_2(12L_2)}{S} = \frac{(3431)(12 \times 22.94)}{331} = 2853 \text{ psi}$$

Note that it is not necessary to calculate the initial bending stress for this pile because $\Delta$ is unchanged. (The longer $L_1$ length will give a corresponding lower value for $f_{bp(1)}$).



Revised 05/92

## Example 15B Continued

5. Calculate stress due to pile lean

$$f_{be(1)} = \frac{P_v(e_1)}{S} = \frac{(36000)(8)}{331} = 870 \text{ psi}$$

6. Calculate stress resultant - See Section 7-3.04B(1)

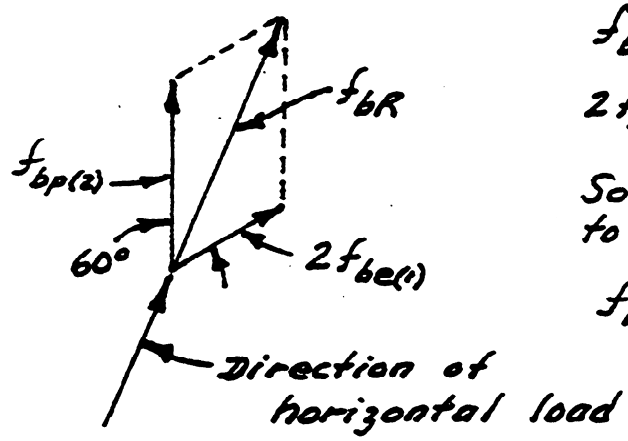


$f_{bp(2)} = 2853$ psi

$2f_{be(1)} = 1740$ psi

Solve stress vector triangles to find the resultant stress

$f_{bR} = 4016$ psi

7. Calculate stress due to design H

$H = 720$ lbs

New $L_u = 12.94'$ (see step 3)

$$f_{bH} = \frac{H(12L_u)}{S} = \frac{(720)(12 \times 12.94)}{331} = 338 \text{ psi}$$

8. Calculate horizontal displacement

$$x = \frac{H(12L_u)^3}{3EI} = \frac{(720)(12 \times 12.94)^3}{3(1.6 \times 10^6)(2485)} = 0.23'' = e_2$$

9. Calculate stress due to $e_2$

$$f_{be(2)} = \frac{P_v(e_2)}{S} = \frac{(36000)(0.23)}{331} = 25 \text{ psi}$$

## Example 15B Continued

10. **Determine allowable compressive stress**

(Note: actual $f_c$ is unchanged at 203 psi)

$L_u$ = new $L_2$ = 22.94 (long. direction governs)

$$L_u/d = \frac{22.94 \times 12}{13.3} = 20.7$$

← unchanged value

$$F_c = \frac{480000}{(20.7)^2} = 1120 \text{ psi}$$

11. **Solve combined stress equation**

$$\frac{f_{bR} + 2(f_{bH} + f_{be(2)})}{3F_b} + \frac{2f_c}{3F_c} \not> 1.0$$

$$\frac{4016 + 2(338 + 25)}{3(1800)} + \frac{2(203)}{3(1120)}$$

$$0.88 + 0.12 = 1.0 \quad \underline{OK}$$

## EXAMPLE 16 BI-AXIAL BENDING

FALSEWORK BEAM CANTED 2% OR LESS

Span = 48 Ft
Cross slope = 2%

Member W 14 x 176
$I_{XX}$ = 2140 $In^4$  $I_{YY}$ = 838 $In^4$
d = 15.22 In  $b_f$ = 15.65 In

Uniform Load P:
Total Section:
Load A = Concrete (160 $Lb/Ft^3$) + Beam (176 Lb/Ft) + LL
= 1420 Lb/Ft
Load B = Concrete only (150 $Lb/Ft^3$) = 1000 Lb/Ft
Bottom slab and stems:
Load C = Concrete (150 $Lb/Ft^3$) = 649 Lb/Ft

Assume lateral bracing is adequate so that $F_b$ = 22,000 psi maximum of the Standard Specifications is not exceeded.

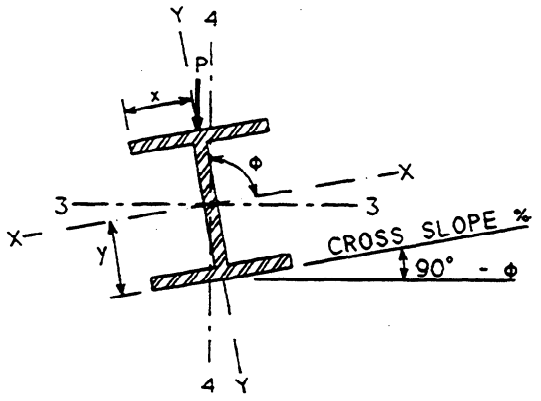


$$\phi = 90° - \tan^{-1}(\text{cross slope})$$

$$= 90° - \tan^{-1}\left(\frac{2.00}{100}\right) = 88.85°$$

$$y = \frac{d}{2} = \frac{15.22 \text{ Inches}}{2} = 7.61 \text{ Inches}$$

$$x = \frac{b_f}{2} = \frac{15.65 \text{ Inches}}{2} = 7.83 \text{ Inches}$$

**FIGURE 1**

a) Check bending using Load A:

$$M = \frac{WL^2}{8} = \frac{1420 \text{ Lb/Ft}(48 \text{ Ft})^2}{8} = 408{,}960 \text{ Ft-Lbs} = 4{,}907{,}520 \text{ In-Lbs}$$

$$f_b = 4{,}907{,}520\left(\frac{7.61}{2140}\sin 88.85° + \frac{7.83}{838}\cos 88.85°\right) = 18{,}368 \text{ psi}$$

18,368 psi < 22,000 psi allowable

b) Check deflection about the 3-3 axis, using Load B:

$$\Delta = \frac{5WL^4}{384EI_3} = \frac{5(1000 \text{ Lb/Ft})(48 \text{ Ft})^4(1728 \text{ In}^3/\text{Ft}^3)}{384(30 \times 10^6 \text{ psi})(I_{XX}\sin^2\phi + I_{YY}\cos^2\phi)}$$

$$= \frac{5(1000)(48)^4(1728)}{384(30 \times 10^6)(2140 \sin^2 88.85 + 838 \cos^2 88.85)}$$

$$= 1.86 \text{ In.} < \frac{L}{240} = \frac{(48)(12)}{240} = 2.40 \text{ Inches allowable}$$

## FALSEWORK BEAM CANTED MORE THAN 2%

Span = 48 Ft
Cross slope = 10%

Member W 14 x 176
$I_{XX}$ = 2140 $In^4$  $I_{YY}$ = 838 $In^4$
d = 15.22 In  $b_f$ = 15.65 In

Uniform Load P:
Total Section:
Load A = Concrete (160 $Lb/Ft^3$) + Beam (176 Lb/Ft) + LL
= 1420 Lb/Ft
Load B = Concrete only (150 $Lb/Ft^3$) = 1000 Lb/Ft
Bottom slab and stems:
Load C = Concrete (150 $Lb/Ft^3$) = 649 Lb/Ft

Assume lateral bracing is adequate so that $F_b$ = 22,000 psi maximum of the Standard Specifications is not exceeded.

$$\phi = 90° - \tan^{-1}\frac{10}{100} = 84.29°$$

a) Check bending:

$$M = \frac{WL^2}{8} = \frac{(1420\ Lb/Ft)(48\ Ft)^2}{8} = 408{,}960\ Ft\text{-}Lbs = 4{,}907{,}520\ In\text{-}Lbs$$

$$f_b = 4{,}907{,}520\left(\frac{7.61}{2140}\sin 84.29° + \frac{7.83}{838}\cos 84.29°\right)$$

= 21,927 psi < 22,000 psi allowable

b) Check deflections:

Check y and x deflections versus L/240 using Load B:

Load in the y-direction = l000(cos(90-84.29)) = 995.04 Lb/FT

$$\Delta_y = \frac{5WL^4}{384EI} = \frac{5(995.04\ Lb/Ft)(48\ Ft)^4(1728\ In^3/Ft^3)}{384(30 \times 10^6\ psi)(2140\ In^4)}$$

$$= 1.85\ In. < \frac{L}{240} = \frac{(48)(12)}{240} = 2.40\ \text{Inches allowable}$$

Load in the x-direction = l000(sin(90-84.29)) = 99.49 Lb/FT

$$\Delta_x = \frac{5WL^4}{384EI} = \frac{5(99.49\ Lb/Ft)(48\ Ft)^4(1728\ In^3/Ft^3)}{384(30 \times 10^6\ psi)(838\ In^4)}$$

$$= 0.47\ In. < \frac{L}{240} = \frac{(48)(12)}{240} = 2.4\ \text{Inches allowable}$$

Check $\Delta_x$ versus max allowable of 1.5 inches using Load C:

Load in the x-direction = 649(sin(90-84.29)) = 64.57 Lb/FT

$$\Delta_x = \frac{5WL^4}{384EI} = \frac{5(64.57\ Lb/Ft)(48\ Ft)^4(1728\ In^3/Ft^3)}{384(30 \times 10^6\ psi)(838\ In^4)}$$

$$= 0.31\ In.$$

Load in the y-direction = 649(cos(90-84.29)) = 645.78 Lb/FT

$$\Delta_y = \frac{5WL^4}{384EI} = \frac{5(645.78\ Lb/Ft)(48\ Ft)^4(1728\ In^3/Ft^3)}{384(30 \times 10^6\ psi)(2140\ In^4)}$$

$$= 1.20\ In.$$

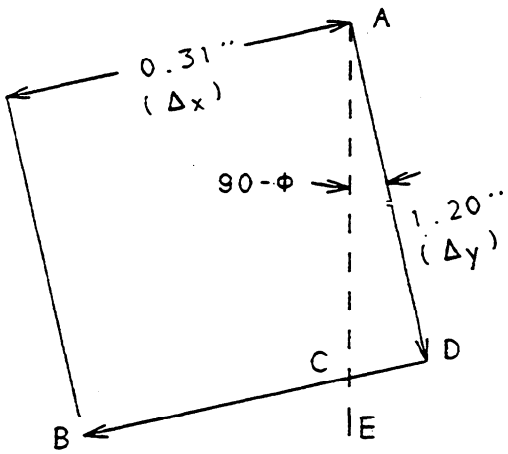


**FIGURE 2**

Lateral deviation = BC.

CD = AD[tan(90° - $\phi$)] = 0.12 In.

BC = BD - CD

= 0.31 - 0.12 = 0.19 < 1.5 In.

# EXAMPLE 17 INTERNAL CABLE BRACING

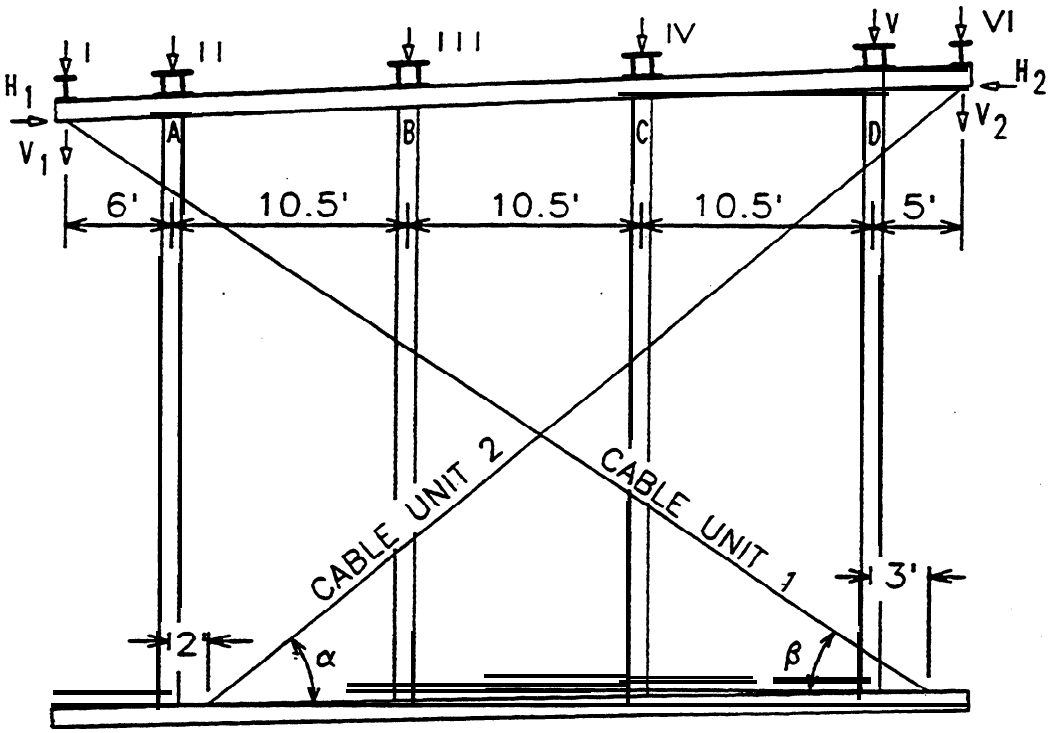


**FIGURE 1**

FALSEWORK BENT NOT ADJACENT TO TRAFFIC

Given

Posts = 12" ϕ Steel sections with wall thickness of 1/4"
Left Post height = 25 feet
Cap slope = + 4% to the right
Sill slope = + 2% to the right
Cap and Sill = W14 x 53
Preload Cables 1 to 1,000 Lbs and Cables 2 to 1,083 Lbs
Cables: One per side, all new l/2" ϕ wire rope

**TABLE 1** **LOADS FROM STRINGERS (KIPS)**

| STRINGER LOCATIONS | I | II | III | IV | V | VI |
|---|---|---|---|---|---|---|
| TOTAL DL + LL | 20 | 73 | 76 | 90 | 69 | 19 |
| TOTAL DL ONLY | 17 | 61 | 64 | 75 | 59 | 16 |
| BOTTOM SLAB & STEM DL + LL | 13 | 51 | 46 | 55 | 42 | 11 |

Section Properties

Cap: I = 541 $In^4$, Weight = 53 Lbs/LF

Posts: A = 9.23 $In^2$, S = 26.56 $In^3$, r = 4.16 In

Cable Data from Manufacturer:
Cables are IWRC 6 x 19
Breaking strength = 11.50 Tons
Metallic area of cable = 0.118 $In^2$
Cable weight = 0.46 Lbs/Ft
Modulus of elasticity = 13.5 x $10^6$ psi
(12.2 x $10^6$ psi up to 20% of ultimate load
Constructional stretch = 0.5%
Safety factor = 3

Efficiency of cable and connectors:
Equivalent thimble diameter efficiency = 95%
Cable clip efficiency (Table 4-1) = 80% USE

Dimensional Analysis

Use geometry to compute post heights, cable angles and cable lengths.

Post Heights: A = 25.00'
B = 25.21'
C = 25.42'
D = 25.63'

Vertical components of cables from horizontal bases:

Cable Unit 1: 25.00 - ((3)(10.5) + 3)(0.02) - 6(0.04) = 24.07'

Cable Unit 2: 25.00 + ((3)(10.5) + 5)(0.04) - 2(0.02) = 26.42'

Angles shown in Figure 1:

$\beta = \tan^{-1} 24.07/40.50 = 30.72°$

$\alpha = \tan^{-1} 26.42/34,50 = 37.44°$

Cable Lengths (assuming no drape):

Cable Unit 1: 40.50/cos 30.72° = 47.11'

Cable Unit 2: 34.50/cos 37.44° = 43.45'

Design Horizontal Load

Assume the 2% loading controls.

Total dead load of the structure (from Table 1) = 292 Kips
2% of total dead load = (292,000)(0.02) = 5,840 Lbs.

## Cable Capacity

The cable capacity is determined for static loading conditions by using the breaking (ultimate) strength divided by an appropriate factor of safety, in this case 3 as recommended by the manufacturer.

$$\text{Working capacity} = \frac{(11.5 \text{ Tons})(2{,}000 \text{ Lbs/Ton})}{3}$$

$$= 7{,}667 \text{ Lbs}$$

Working load = (80%)(7,667) = 6,134 with Crosby clips

Capacity of cable unit (2 cables) = 2(6,134) = 12,268 Lbs

## Effects of Cable Stretch

1. Verify Cable Pre-Load Forces

Cables 1 designated preload = 1,000 Lbs each.

The preload in Cable Unit 2 must be such that the horizontal component of Cable Unit 2 balances that of Cable Unit 1.

Preload the individual cables of Cable Unit 2 to:

$$\begin{aligned} \text{Preload} &= 1{,}000 \quad \cos\beta/\cos\alpha \\ &= 1{,}000 \cos 30.72°/\cos 37.44° \\ &= 1{,}083 \text{ Lbs} \approx 1{,}080 \text{ Lbs each} \end{aligned}$$

2. Cable Design Load

Cable loads due to design horizontal load:

Cable 1 = (5,840/cos 30.72°)/2 = 3,397 < 6,134 Lbs

Cable 2 = (5,840/cos 37.44°)/2 = 3,678 < 6,134 Lbs

Vertical Component of Cable Loading

Cable Unit 1 = (5,840)(tan 30.72°) = 3,470 Lbs

Cable Unit 2 = (5,840)(tan 37.44°) = 4,471 Lbs

3. Cable Stretch

The cable will experience two 'stretchs conditions', elastic stretch and constructional stretch.

Elastic stretch

For loads up to 20% of the ultimate, use a modulus of elasticity equal to (0.90)E. For the remainder of the load use the full value of E. The two equations for elastic stretch are as follows:

$$\Delta_1 = \frac{[(20\%\ \text{Ultimate Load}) - (\text{Preload})](L)}{A(0.90E)}$$

$$\Delta_2 = \frac{[(\text{Cable Load}) - (20\%\ \text{Ultimate Load})](L + \Delta_1)}{AE}$$

20% of ultimate load = (0.20)(11.5 tons)(2,000 Lbs/ton)
= 4,600 Lbs

$$\text{Cable 1 } \Delta_1 = \frac{(3397 - 1000)(47.11)}{(0.118)(0.90)(13.5\text{x}10^6)} = 0.08 \text{ Ft}$$

$$\text{Cable 2 } \Delta_1 = \frac{(3678 - 1083)(43.45)}{(0.118)(0.90)(13.5\text{x}10^6)} = 0.08 \text{ Ft}$$

Constructional stretch

Assume that the total constructional stretch comes out at 65% of the ultimate load and that the stretch is proportional for the amount of load applied.

Constructional stretch:

65% of nominal load = (0.65)(11.5 tons)(2,000 Lbs/ton)
= 14,950 Lbs

Constructional Stretch = (Proportional Load)(0.5%)(L)

$$\text{Cable Unit 1} = \left(\frac{3,397}{14,950}\right)(0.005)(47.11) = 0.05 \text{ Ft}$$

$$\text{Cable Unit 2} = \left(\frac{3,678}{14,950}\right)(0.005)(43.45) = 0.05 \text{ Ft}$$

Total stretch

Cable Unit 1  47.11 + 0.08 + 0.05 = 47.24 Ft

Cable Unit 2  43.45 + 0.08 + 0.05 = 43.58 Ft

Note that the effects of cap or sill bending can generally be ignored for short cantilever conditions.

Cap Movement

a = vertical distance between the cable connection at the cap and the point on the sill directly below it.

b= cable length after stretch

c = the slope distance between the point on the sill described for a, and the cable connection on the sill.

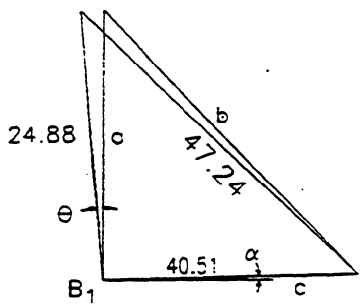


Cable Unit 1 Loaded

a= 25.00 - (6)(0.04) + (6)(0.02)
= 24.88 Ft

C= 40.5/cos α
= 40.50/cos 1.15°
= 40.51 Ft

$$B_1 = \cos^{-1}\left[\frac{a^2 + c^2 - b^2}{2ac}\right] \text{ Law of Cosines}$$

$$= \cos^{-1}\left[\frac{(24.88)^2 + (40.51)^2 - (47.24)^2}{(2)(24.88)(40.51)}\right]$$

$$= 89.19°$$

$$\theta = B_1 - (90° - \alpha)$$

$$= 89.39° - (90° - 1.15°) = 0.34°$$

Cap Displacement = 24.88 Sin 0.34°
= 0.148 Ft = 1.78 In.

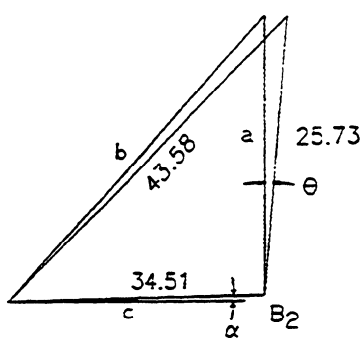


Cable Unit 2 Loaded

a = 25.63 + (5)(0.04) - (5)(0.02)
= 25.73 Ft

c = 34.50/cos α
= 34.50/cos 1.15°
= 34.51 Ft

$$B_2 = \cos^{-1}\left[\frac{a^2 + c^2 - b^2}{2ac}\right] \text{ Law of Cosines}$$

$$= \cos^{-1}\left[\frac{(25.73)^2 + (34.51)^2 - (43.58)^2}{(2)(25.73)(34.51)}\right]$$

$$= 91.49°$$

$$\theta = B_2 - (90° + \alpha)$$

$$= 91.46° - (90° + 1.15°) = 0.34°$$

Cap Displacement = 25.73 Sin 0.34°
= 0.153 Ft. = 1.84 In.

## Determine Post Adequacy for Loaded Cable Condition

### 1. Post Loads

Moment distribution was used to compute the post loads resulting from the bottom slab and stem reactions along with the vertical component of one loaded cable unit. The process was repeated with the other cable unit loaded.

**ABLE 2 POST LOADS - BOTTOM SLAB AND STEMS + CABLE LOAD**

| POST REACTIONS, LBS | POST A | POST B | POST C | POST D |
|---|---|---|---|---|
| LOAD CABLE 1 ONLY | 79,685 | 33,543 | 50,929 | 59,566 |
| LOAD CABLE 2 ONLY | 73,564 | 37,559 | 46,737 | 66,863 |

### Stresses In Posts

Evaluate each post by using the combined stress expression:

$$\frac{f_a}{F_a} + \frac{f_b}{F_b} \leq 1$$

**Where:**

$$f_a = \frac{P}{A} \text{ and } F_a = 16{,}000 - 0.38\left(\frac{L}{r}\right)^2 \text{ psi}$$

$$f_b = \frac{Mc}{I} = \frac{Pec}{I} = \frac{Pe}{S} \text{ and } F_b = 22{,}000 \text{ psi}$$

Sample calculation for stress in Post A with Cable Unit 1 loaded:

P = 79,685 Lbs, e = 1.78 inches

Using the combined stress expression:

$$\frac{\frac{P}{A}}{F_a} + \frac{\frac{Pe}{S}}{F_b} \leq 1$$

$$\frac{\frac{79{,}685}{9.23}}{14{,}024} + \frac{\frac{79{,}605(1.78)}{26.56}}{22{,}000}$$

$$0.62 + 0.24 = 0.86 < 1.00$$

Table 3 lists the results for all four posts for both directions of horizontal loading.

The stesses in all posts are satisfactory for this condition of loading.

TABLE 3 SUMMARY OF STRESSES

| POST | A | B | C | D |
|---|---|---|---|---|
| $F_a$ | 14,024 | 13,990 | 13,957 | 13,923 |
| $F_b$ | 22,000 | 22,000 | 22,000 | 22,000 |
| CABLE UNIT 1 LOADED | | | | |
| $f_a$ | 8,633 | 3,634 | 5,518 | 6,454 |
| $f_b$ | 5,340 | 2,248 | 3,413 | 3,992 |
| COMBINED STRESS | 0.86 | 0.36 | 0.55 | 0.65 |
| CABLE UNIT 2 LOADED | | | | |
| $f_a$ | 7,970 | 4,069 | 5,064 | 7,244 |
| $f_b$ | 5,096 | 2,602 | 3,238 | 4,632 |
| COMBINED STRESS | 0.80 | 0.41 | 0.51 | 0.73 |

Note that stresses in the cap and sill still need to be analyzed separately for both directions of cable loading.

2. Total DL + LL Post Loads and Stresses

Table 4 lists the results of placing the total section (dead and live loads) on the translated posts.

TABLE 4 SUMMARY OF STRESSES

| POST | A | B | C | D |
|---|---|---|---|---|
| $F_a$ | 14,024 | 13,990 | 13,957 | 13,923 |
| $F_b$ | 22,000 | 22,000 | 22,000 | 22,000 |
| CABLE UNIT 1 LOADED | | | | |
| Reaction | 113,494 | 58,670 | 81,436 | 99,122 |
| $f_a$ | 12,296 | 6,356 | 8,823 | 10,739 |
| $f_b$ | 7,606 | 3,932 | 5,458 | 6,643 |
| COMBINED STRESS | 1.22 | 0.63 | 0.88 | 1.07 |
| CABLE UNIT 2 LOADED | | | | |
| Reaction | 107,374 | 62,686 | 77,245 | 106,419 |
| $f_a$ | 11,633 | 6,792 | 8,369 | 11,530 |
| $f_b$ | 7,439 | 4,343 | 5,351 | 7,372 |
| COMBINED STRESS | 1.17 | 0.68 | 0.84 | 1.16 |

When cable Unit 1 is loaded, posts B and C are not considered to be overstressed for this condition of loading.

When Cable Unit 2 is loaded, post B is the only post not considered as being overstressed for this condition of loading.

<u>Verifying Preload Condition</u>

An aid to ascertain if the appropriate pre-load is applied to the cable is to determine and verify the amount of sag from the straight line between the cable connection points.

Use the equation expressed below to determine the distance from the chord to the loaded cable:

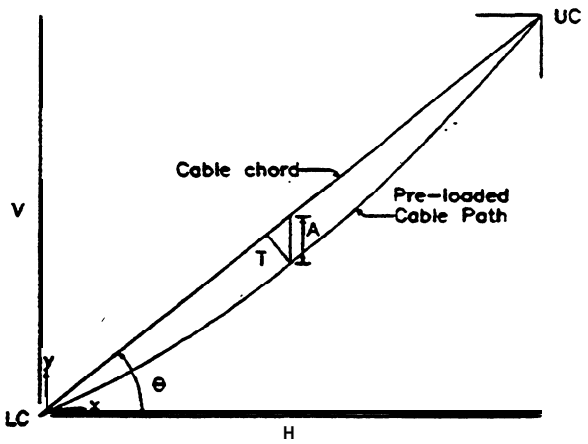


**Where:**

- q = Cable weight per foot
- $T_H$ = Horizontal force in the cable
- y = Vertical distance above the cable-sill connection
- x = Horizontal distance from the cable-sill connection
- H = Horizontal distance between cable ends
- V = Vertical distance between cable ends
- UC = Upper cable connection
- LC = Lower cable connection
- T = Offset normal to the chord between cable connection points

For one preloaded cable of Cable Unit 2:

$$T_H = 1{,}080 \cos 37.44°$$
$$= 1{,}715 \text{ Lbs}$$

$$A = \left(\frac{0.46x}{1715}\right)(34.5 - x)$$

For x = 17.25

$$A = \left(\frac{(0.46)(17.25)}{1715}\right)(34.5 - 17.25)$$
$$= 0.08 \text{ Ft}$$

$$\text{Offset} = A \cos \theta$$
$$= 0.08 \cos 37.44° = 0.06 \text{ Ft}$$

A table may be generated for offsets of the cable from the chord at distances along the horizontal axis if accurate amount and location of maximum sag is desired.

| x | Sag (A) | Offset |
|---|---|---|
| 0 | 0.00 | 0.00 |
| 3.45 | 0.03 | 0.02 |
| 6.90 | 0.05 | 0.04 |
| 10.35 | 0.07 | 0.05 |
| 13.80 | 0.08 | 0.06 |
| 17.25 | 0.08 | 0.06 |
| 20.70 | 0.08 | 0.06 |
| 24.15 | 0.07 | 0.05 |
| 27.60 | 0.05 | 0.04 |
| 31.05 | 0.03 | 0.02 |
| 34.50 | 0.00 | 0.00 |

For close approximation assume that for preloaded cables the maximum sag occurs at the center of the horizontal distance between connection points.

# APPENDIX E - TIMBER FASTENERS

## CONNECTOR DESIGN VALUES


Table E-l Design Values for Bolts . . .. . . . . . Page E-l
Table E-2 Lag Screw Design Values . . . . . E-2
Table E-3 Lag Screw Design Values . . . . . E-3
Table E-4 Common Nail Design Values . . . . . E-4
Table E-5 Box Nail Design Values . . . . . E-5
Table E-6 Double Head Scaffold Nail Design Values . . . . . E-6
Table E-7 Spike Design Values . . . . . E-7
Table E-8 Wood Side Plate Reduction Factors . . . . . E-8


## DESIGN OF MULTIPLE BOLT CONNECTIONS


Section 1. General Information

1.01 Introduction . . . . . E-9
1.02 Definitions . . . . . E-9
1.03 Spacing and Clearance Requirements . . . . . E-10
1.04 Fastener Placement for Loads at Angle to Grain . . . . . E-11
1.05 Cross-Sectional Areas . . . . . E-11
1.06 Connector Design Values . . . . . E-12

Section 2. Example Calculations . . . . . E-13

## BOLT DESIGN VALUES

P = ALLOWABLE LOAD PARALLEL TO GRAIN IN POUNDS
Q = ALLOWABLE LOAD PERPENDICULAR TO GRAIN IN POUNDS

| | 1/2" BOLT | | 5/8" BOLT | | 3/4" BOLT | | 7/8" BOLT | | 1" BOLT | |
|---|---|---|---|---|---|---|---|---|---|---|
| | P | Q | P | Q | P | Q | P | Q | P | Q |
| 1.5 | 940 | 430 | 1180 | 490 | 1420 | 540 | 1660 | 600 | 1890 | 650 |
| 2.0 | 1170 | 570 | 1550 | 650 | 1880 | 720 | 2210 | 790 | 2520 | 870 |
| M 2.5 | 1260 | 860 | 1820 | 810 | 2310 | 900 | 2740 | 990 | 3150 | 1080 |
| E 3.0 | 1270 | 980 | 1960 | 970 | 2630 | 1080 | 3220 | 1190 | 3750 | 1300 |
| M 3.5 | 1270 | 1010 | 1980 | 1130 | 2800 | 1260 | 3580 | 1390 | 4270 | 1520 |
| B 4.0 | 1270 | 1010 | 1990 | 1290 | 2850 | 1440 | 3790 | 1590 | 4670 | 1730 |
| E 4.5 | 1270 | 1010 | 1990 | 1400 | 2860 | 1620 | 3880 | 1790 | 4930 | 1950 |
| R 5.0 | 1270 | 1010 | 1990 | 1410 | 2860 | 1750 | 3890 | 1990 | 5000 | 2170 |
| 5.5 | 1270 | 1010 | 1990 | 1410 | 2860 | 1880 | 3900 | 2180 | 5070 | 2380 |
| S 6.0 | 1270 | 1010 | 1990 | 1380 | 2860 | 1860 | 3900 | 2240 | 5070 | 2540 |
| I 6.5 | 1270 | 1010 | 1990 | 1340 | 2860 | 1850 | 3900 | 2300 | 5070 | 2700 |
| Z 7.0 | 1270 | 1010 | 1990 | 1300 | 2860 | 1830 | 3900 | 2360 | 5070 | 2870 |
| E 7.5 | 1270 | 1010 | 1990 | 1260 | 2860 | 1820 | 3900 | 2420 | 5080 | 3030 |
| 8.0 | 1270 | 1010 | 1990 | 1260 | 2860 | 1780 | 3900 | 2380 | 5080 | 3010 |
| I 8.5 | 1270 | 1010 | 1990 | 1260 | 2860 | 1730 | 3900 | 2340 | 5080 | 2990 |
| N 9.0 | 1270 | 1010 | 1990 | 1260 | 2860 | 1690 | 3900 | 2300 | 5080 | 2980 |
| C 9.5 | 1270 | 1010 | 1990 | 1260 | 2860 | 1640 | 3890 | 2270 | 5080 | 2960 |
| H 10.0 | 1270 | 1010 | 1990 | 1260 | 2860 | 1640 | 3890 | 2270 | 5080 | 2910 |
| E 10.5 | 1270 | 1010 | 1990 | 1260 | 2860 | 1640 | 3890 | 2270 | 5080 | 2860 |
| S 11.0 | 1270 | 1010 | 1990 | 1260 | 2860 | 1640 | 3890 | 2270 | 5080 | 2810 |
| 11.5 | 1270 | 1010 | 1990 | 1260 | 2860 | 1640 | 3900 | 2060 | 5080 | 2770 |
| 12.0 | 1270 | 1010 | 1990 | 1260 | 2860 | 1640 | 3900 | 2060 | 5080 | 2710 |

TABLE E-1

LAG SCREWS WITHDRAWAL AND LATERAL LOAD DESIGN VALUES

DOUGLAS FIR-LARCH [a]

| LENGTH OF LAG SCREW IN MAIN MEMBER (in) | DIAMETER OF LAG SCREW (in) | WITH-DRAWAL VALUE[b] (lb/in) | LATERAL LOAD VALUES[c] (lbs.) | | | |
|---|---|---|---|---|---|---|
| | | | 1.5" Side Member | | 2.5" Side Member | |
| | | | P[d] | Q[e] | P[d] | Q[e] |
| 4 | 1/4 | 232 | 170 | 170 | | |
| | 5/16 | 274 | 220 | 180 | | |
| | 3/8 | 314 | 250 | 190 | | |
| | 7/16 | 353 | 280 | 190 | | |
| | 1/2 | 390 | 290 | 190 | | |
| | 5/8 | 461 | 360 | 210 | | |
| 5 | 1/4 | 232 | 200 | 200 | | |
| | 5/16 | 274 | 290 | 250 | | |
| | 3/8 | 314 | 380 | 290 | | |
| | 7/16 | 353 | 420 | 290 | | |
| | 1/2 | 390 | 440 | 280 | | |
| | 5/8 | 461 | 530 | 320 | | |
| 6 | 1/4 | 232 | 230 | 220 | | |
| | 5/16 | 274 | 330 | 280 | | |
| | 3/8 | 314 | 420 | 320 | 380 | 290 |
| | 7/16 | 353 | 520 | 360 | 440 | 310 |
| | 1/2 | 390 | 600 | 390 | 470 | 310 |
| | 5/8 | 461 | 710 | 430 | 550 | 330 |
| | 3/4 | 528 | | | 630 | 350 |
| | 7/8 | 593 | | | 720 | 370 |
| | 1 | 656 | | | 800 | 400 |

(a) Species Group II, specific gravity 0.51. Values for other species available by contacting the Sacramento Office of Structure Construction.

(b) Design values of withdrawal in pounds/inch of-penetration of threaded part into side grain of member holding point,

(c) Lateral load per lag screw in single shear.

(d) Parallel to grain.

(e) Perpendicular to grain.

**TABLE E-2**

## CONNECTOR DESIGN VALUES

**LAG SCREWS** **WITHDRAWAL AND LATERAL LOAD DESIGN VALUES**

DOUGLAS FIR-LARCH [a]

| LENGTH OF LAG SCREW IN MAIN MEMBER (in) | DIAMETER OF LAG SCREW (in) | WITH-DRAWAL VALUE[b] (lbs/in) | LATERAL LOAD VALUES[c] (lbs.) | | | |
|---|---|---|---|---|---|---|
| | | | 1.5" Side Member | | 2.5" Side Member | |
| | | | P[d] | Q[e] | P[d] | Q[e] |
| 7 | 1/4 | 232 | 240 | 230 | | |
| | 5/16 | 274 | 350 | 300 | | |
| | 3/8 | 314 | 460 | 350 | 430 | 330 |
| | 7/16 | 353 | 560 | 390 | 580 | 410 |
| | 1/2 | 390 | 660 | 430 | 650 | 420 |
| | 5/8 | 461 | 780 | 470 | 750 | 450 |
| | 3/4 | 528 | | | 850 | 470 |
| | 7/8 | 593 | | | 970 | 500 |
| | 1 | 656 | | | 1090 | 540 |
| 8 | 3/8 | 314 | | | 480 | 370 |
| | 7/16 | 353 | | | 630 | 440 |
| | 1/2 | 390 | | | 770 | 500 |
| | 5/8 | 461 | | | 970 | 580 |
| | 3/4 | 528 | | | 1090 | 600 |
| | 7/8 | 593 | | | 1220 | 630 |
| | 1 | 656 | | | 1370 | 690 |
| 9 | 3/8 | 314 | | | 520 | 400 |
| | 7/16 | 353 | | | 680 | 480 |
| | 1/2 | 390 | | | 830 | 540 |
| | 5/8 | 461 | | | 1130 | 680 |
| | 3/4 | 528 | | | 1350 | 740 |
| | 7/8 | 593 | | | 1470 | 760 |
| | 1 | 656 | | | 1660 | 830 |

See TABLE E-2 for footnotes.

**TABLE E-3**

**COMMON NAIL WITHDRAWAL AND LATERAL LOAD DESIGN VALUES**

**DOUGLAS FIR-LARCH[a]**

| **NAIL PROPERTIES** Penny Weight | 6d | 8d | 10d | 12d | 16d | 20d | 30d | 40d |
|---|---|---|---|---|---|---|---|---|
| Length (inches) | 2 | 2.5 | 3 | 3.25 | 3.5 | 4 | 4.5 | 5 |
| Diameter[b] (inches) | .113 | .131 | .148 | .148 | .162 | .192 | .207 | .225 |
| **WITHDRAWAL[c]** | | | | | | | | |
| Withdrawal Value (lbs/inch) | 29 | 34 | 38 | 38 | 42 | 49 | 53 | 58 |
| **LATERAL[d]** | | | | | | | | |
| Desired Penetration (inches) 11 diameters | 1.24 | 1.44 | 1.63 | 1.63 | 1.78 | 2.11 | 2.28 | 2.48 |
| Lateral Value at Desired Penetration (lbs) | 63 | 78 | 94 | 94 | 108 | 139 | 155 | 176 |
| Minimum Penetration (inches) | .41 | .48 | .54 | .54 | .59 | .70 | .76 | .83 |
| Lateral Value at Minimum Penetration (lbs) | 21 | 26 | 31.1 | 31.1 | 36 | 46.1 | 51.7 | 58.7 |

(a) Species Group II, specific gravity 0.51. Values for other species available by contacting the Sacramento Office of Structure Construction.

(b) Diameters apply to nails before application of any protective coating.

(c) Design values of withdrawal in pounds/inch of penetration into side grain of member holding point.

(d) Design value for lateral loads (single shear).

**TABLE E-4**

**BOX NAIL WITHDRAWAL AND LATERAL LOAD DESIGN VALUES**

**DOUGLAS FIR-LARCH[a]**

| **NAIL PROPERTIES** Penny Weight | 6d | 8d | 10d | 12d | 16d | 20d | 30d | 40d |
|---|---|---|---|---|---|---|---|---|
| Length (inches) | 2 | 2.5 | 3 | 3.25 | 3.5 | 4 | 4.5 | 5 |
| Diameter[b] (inches) | .099 | .113 | .128 | .128 | .135 | .148 | .148 | .162 |
| **WITHDRAWAL[c]** | | | | | | | | |
| Withdrawal Value (lbs/inch) | 25 | 29 | 33 | 33 | 35 | 38 | 38 | 42 |
| **LATERAL[d]** | | | | | | | | |
| Desired Penetration (inches) 11 diameters | 1.09 | 1.24 | 1.41 | 1.41 | 1.49 | 1.63 | 1.63 | 1.78 |
| Lateral Value at Desired Penetration (lbs) | 51 | 63 | 76 | 76 | 82 | 94 | 94 | 108 |
| Minimum Penetration (inches) | .36 | .41 | .47 | .47 | .50 | .54 | .54 | .59 |
| Lateral Value at Minimum Penetration (lbs) | 17 | 21 | 25.3 | 25.3 | 24 | 31.3 | 31.7 | 36 |

(a) Species Group II, specific gravity 0.51. Values for other species available by contacting the Sacramento Office of Structure Construction.

(b) Diameters apply to nails before application of any protective coating.

(c) Design values of withdrawal in pounds/inch of penetration into side grain of member holding point.

(d) Design value for lateral loads (single shear).

**TABLE E-5**

**DOUBLE HEAD SCAFFOLD NAIL** **WITHDRAWAL AND LATERAL LOAD DESIGN VALUES**

**DOUGLAS FIR-LARCH**[a]

| **NAIL PROPERTIES** Penny Weight | 6d | 8d | 10d | 16d | 20d | 30d |
|---|---|---|---|---|---|---|
| Length[b] (inches) | 1.75 | 2.25 | 2.688 | 3.125 | 3.625 | 4.063 |
| Diameter[c] (inches) | .113 | .131 | .148 | .162 | .192 | .207 |
| **WITHDRAWAL**[d] | | | | | | |
| Withdrawal Value (lbs/inch) | 29 | 34 | 38 | 42 | 49 | 53 |
| **LATERAL**[c] | | | | | | |
| Desired Penetration (inches) 11 diameters | 1.24 | 1.44 | 1.63 | 1.78 | 2.11 | 2.28 |
| Lateral Value at Desired Penetration (lbs) | 63 | 78 | 94 | 108 | 139 | 155 |
| Minimum Penetration (inches) | .41 | .48 | .54 | .59 | .70 | .76 |
| Lateral Value at Minimum Penetration (lbs) | 21 | 26 | 31.1 | 36 | 46.1 | 51.7 |

(a) Species Group II, specific gravity 0.51. Values for other species available by contacting the Sacramento Office of Structure Construction.

(b) Length tip to top of lower head. This is the length to be used when duplex nails are used. Overall length of nail is same as that of a common nail.

(c) Diameters apply to nails before application of any protective coating.

(d) Design values of withdrawal in pounds/inch of penetration into side grain of member holding point.

(e) Design value for lateral loads (single shear).

**TABLE E-6**

**SPIKE WITHDRAWAL AND LATERAL LOAD DESIGN VALUES**

**DOUGLAS FIR-LARCH[a]**

| **NAIL PROPERTIES** | | | | | | | | |
|---|---|---|---|---|---|---|---|---|
| Penny Weight | 10d | 12d | 16d | 20d | 30d | 40d | 50d | 60d |
| Length (inches) | 3 | 3.25 | 3.5 | 4 | 4.5 | 5 | 5.5 | 6 |
| Diameter[b] (inches) | .192 | .192 | .207 | .225 | .244 | .263 | .283 | .283 |
| **WITHDRAWAL[c]** | | | | | | | | |
| Withdrawal Value (lbs/inch) | 49 | 49 | 53 | 58 | 63 | 67 | 73 | 73 |
| **LATERAL[d]** | | | | | | | | |
| Desired Penetration (inches) 11 diameters | 2.11 | 2.11 | 2.28 | 2.48 | 2.68 | 2.89 | 3.11 | 3.11 |
| Lateral Value (lbs) at Desired Penetration | 139 | 139 | 155 | 176 | 199 | 223 | 248 | 248 |
| Minimum Penetration (inches) | .70 | .70 | .76 | .83 | .89 | .96 | 1.04 | 1.04 |
| Lateral Value (lbs) at Minimum Penetration | 46.1 | 46.1 | 51.7 | 58.9 | 66.1 | 74.1 | 82.9 | 82.9 |

(a) Species Group II, specific gravity 0.51. Values for other species available by contacting the Sacramento Office of Structure Construction.

(b) Diameters apply to nails before application of any protective coating.

(c) Design values of withdrawal in pounds/inch of penetration into side grain of member holding point.

(d) Design value for lateral loads (single shear).

**TABLE E-7**

## MULTIPLE FASTENERS

## WOOD SIDE PLATE (REDUCTION) FACTORS FOR LATERALLY LOADED CONNECTORS (BOLTS OR LAG-SCREWS)

| A | B | NUMBER OF FASTENERS IN A ROW | | | | | | | |
|---|---|---|---|---|---|---|---|---|---|
| $A_1/A_2$ | $A_1$ ($in^2$)[a] | 2 | 3 | 4 | 5 | 6 | 7 | 8 | 9 |
| 0.0[b][c] | < 12 | 1.00 | 0.87 | 0.76 | 0.67 | 0.58 | 0.51 | 0.45 | 0.39 |
| | 12 - < 19 | 1.00 | 0.92 | 0.82 | 0.75 | 0.66 | 0.58 | 0.52 | 0.48 |
| | 19 - < 28 | 1.00 | 0.94 | 0.89 | 0.83 | 0.75 | 0.69 | 0.62 | 0.58 |
| | 28 - < 40 | 1.00 | 0.96 | 0.93 | 0.88 | 0.82 | 0.77 | 0.72 | 0.67 |
| | 40 - < 64 | 1.00 | 1.00 | 0.94 | 0.91 | 0.86 | 0.81 | 0.78 | 0.73 |
| | > 64 | 1.00 | 1.00 | 0.96 | 0.91 | 0.86 | 0.83 | 0.79 | 0.76 |
| 1.0[b][c] | < 12 | 1.00 | 0.97 | 0.92 | 0.85 | 0.78 | 0.71 | 0.65 | 0.59 |
| | 12 - < 19 | 1.00 | 0.98 | 0.94 | 0.89 | 0.84 | 0.78 | 0.72 | 0.66 |
| | 19 - < 28 | 1.00 | 1.00 | 0.97 | 0.93 | 0.89 | 0.85 | 0.80 | 0.76 |
| | 28 - < 40 | 1.00 | 1.00 | 0.99 | 0.96 | 0.92 | 0.89 | 0.86 | 0.83 |
| | 40 - < 64 | 1.00 | 1.00 | 1.00 | 0.97 | 0.94 | 0.91 | 0.88 | 0.85 |
| | > 64 | 1.00 | 1.00 | 1.00 | 0.99 | 0.96 | 0.93 | 0.91 | 0.88 |

Notes: 1. $A_1$ = cross-sectional area of main member.
2. $A_2$ = cross-sectional area of side member(s).

(a) When $A_1/A_2$ exceeds 1.0, use $A_2$ instead of $A_1$.
(b) When $A_1/A_2$ exceeds 1.0, use $A_2/A_1$ instead.
(c) For $A_1/A_2$ between 0 and 1.0, interpolate from the tabulated values.

**TABLE E-8**

# DESIGN OF MULTIPLE-FASTENER CONNECTIONS [1]

## Section 1 General Information

### 1.01 Introduction

The procedure for evaluating the adequacy of connections made with bolts and lag screws, as discussed in Section 4-3, Timber Fasteners, applies only to connections made with one fastener or two fasteners installed in a line parallel to the side member. In a two-fastener connection where the fasteners are not installed in a line parallel to the side member, or in any connection where more than two fasteners are used, the design procedures are modified in accordance with industry design criteria for multiple-fastener connections.

Industry requirements for multiple-fastener connections that are applicable to falsework construction, and the procedures necessary to accommodate them, are explained in the following sections.

### 1.02 Definitions

#### 1.02A Row of Fasteners

A row of fasteners aligned with 'the direction of the applied load consists of the following:

- Two or more bolts of the same diameter loaded in single shear or double shear.
- Two or more lag screws of the same type and size loaded in single shear.

#### 1.02B Group of Fasteners

A group of fasteners consists of one or more parallel rows of the same type of fastener arranged symmetrically with respect to the axis of the load.

#### 1.02C Width of Fastener Group

The overall width of a fastener group is defined as the center-to-center spacing of the adjacent rows, except as provided in the following paragraph.

---

[1] The design criteria and procedures discussed herein apply to both bolt and lag screw connections. In the text, the term "fasteners" includes bolts and lag screws. For simplicity, in some cases the term "bolts" is used alone; however, such use is understood to include lag screws as well.

When the fasteners in adjacent rows are staggered and the distance between the adjacent rows is less than one-fourth of the distance between the closest fasteners in the adjacent rows, the adjacent rows are considered to be a single row when determining the design value for the. fastener group.

When only one row of fasteners is used, or when adjacent rows are considered to be a single row as provided in the preceding paragraph, the width of the fastener group for design purposes will be the minimum parallel-to-grain spacing of the fasteners.

1.02D L/D Ratio

L/D is the ratio of the length, L, of the fastener in the main member to its diameter, D.

1.03 Spacing and Clearance Requirements

1.03A Spacing Along a Row

Fastener spacing is measured between the centers of adjacent bolts or lag screws.

For parallel-to-grain loading when the actual bolt load equals the allowable design load, the minimum spacing between bolts in a row parallel to the grain is 4 times the bolt diameter. If the actual bolt load is less than the allowable load but not less than 75 percent of the allowable load, the spacing may be reduced proportionately, but not below 3 bolt diameters regardless of the actual bolt load. [2]

For perpendicular-to-grain loading, spacing between bolts or lag screws in a row perpendicular to the grain is limited by the spacing requirements of the attached member or members loaded parallel to the grain.

1.03B Spacing Between Rows

Spacing between adjacent rows is measured between the row centerlines.

For parallel-to-grain loading, the minimum spacing across the grain between rows of bolts is l-1/2 bolt diameters. [2]

For perpendicular-to-grain loading, as with brace to post connections, the spacing parallel to the grain between rows of

---

[2] When lag screws are used, the minimum spacings are the same as required for bolts of a diameter equal to the shank diameter of the lag screw used.

bolts must be at least 2-l/2 bolt diameters for L/D ratios of 2. or less and 5 bolt diameters for L/D ratios of 6 or more. For ratios between 2 and 6, the minimum spacing may be obtained by straight-line interpolation.

The maximum spacing between adjacent rows of fasteners may not exceed 5 inches, regardless of other considerations.

1.03C Edge and End Distance Requirements

Except as provided in the following paragraph, edge and end distance requirements for multi-fastener connections are the same as the requirements for single fastener connections.[3]

For parallel-to-grain loading in tension or compression, the minimum edge distance is 1-l/2 bolt (or lag screw) diameters, except that when the L/D ratio is more than 6, the minimum edge distance is l-1/2 diameters or one-half the distance between adjacent rows, whichever is greater.

1.04 Fastener Placement for Loads at an Angle to Grain

When the load is applied at an angle to the grain, as is the case with falsework bracing, industry practice requires that the gravity axis of all members in the connection must pass through the center of resistance of the fastener group.

l-05 Cross-Sectional Areas

The procedure for evaluating the adequacy of multiple-fastener connections uses reduction factors that are a function of an equivalent cross-sectional area based on the width of the fastener group in each of the members making up the connection.

For bolted connections, the equivalent cross-sectional area is the product of the width of the fastener group (as defined herein in Section 1.02, Definitions) and the thickness of the member under consideration. When lag screws are used, the thickness of the main member is the depth of penetration of the lag screw into the main member.

When a member is loaded in the perpendicular to the grain direction, as a falsework post loaded by the bracing, its equivalent cross-sectional area is the product of the thickness of the member and the overall width of the fastener group under consideration.

For the calculations, gross cross-sectional areas are used with no reduction for bolt or lag screw holes.

---

[3]See Chapter 4, Section 4-3, Timber Fasteners.

## 1.06 Connector Design Values

(a) The design value for a group of fasteners is the sum of the design values for the individual rows in the group.

(b) The design value for a row of fasteners of the same size and type cannot exceed the value of $P_r$ as given by the following formula:

$$P_r = KP_s$$

where $P_r$ = the resultant design value, in pounds, for the row of fasteners.

$P_s$ = the summation of the design values for the individual fasteners in a row.

K = the modification (reduction) factor for the number of fasteners in a row. Modification factors are shown in Table E-8.

## Section 2 Example Calculations

### Example 1

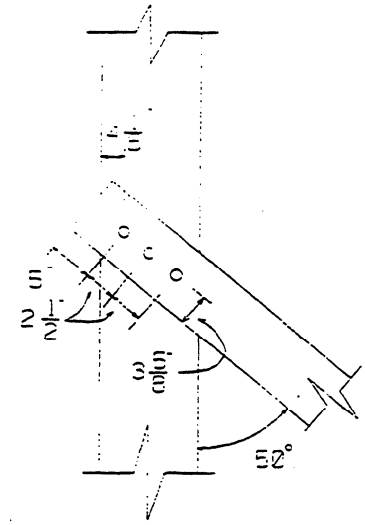


Given:

12 x 12 post with single 2 x 8 brace.

3 - 5/8" bolts in a single row.

Center of gravity of the bolt group coincides with the center of gravity of the members.

Determine the allowable load on the group of fasteners.

### Spacing of bolts in a row

4D = (4)(0.625) = 2.5 inches minimum (used)

### End distance

Use the more critical value for tension since the brace could be in either tension or compression.

7D = (7)(0.625) = 4.375 inches minimum < 5"

### Edge distance

For the main member:

4D = (4)(0.625) = 2.5 inches minimum < 4.125"

For the side member:

1.5D = (l-5)(0.625) = 0.938 inches < 1.25"

### Determine the single bolt value

Side member value = (O.75)(1960) = 1470 lbs.

Main member value using the modified Hankinson's formula:

$$\frac{(0.75)(1990)(1260)}{(1990)(\sin^2 50) + (1260)(\cos^2 50)} = 1114 \text{ lbs.}$$

The value for the main member controls.

Example 1 (Continued)

Determine the capacity of the bolt group

$$P_{GROUP} = K(\text{no. of fasteners})(\text{single bolt value})$$

$$= K(3x1114)$$

$$= K(3342) \text{ lbs/row}$$

The value for reduction factor K is obtained from Table E-8, after calculating the cross-sectional area of the side and main members. (See Table E-8.)

$A_1$(main member) = (2.5) (12) = 30.00 $in^2$

$A_2$ (side member) = (1.5) (2.5) = 3.75 $in^2$

$A_1/A_2 = 30.00/3.75 = 8.00$

Since $A_1/A_2 > 1$, use the value of $A_2/A_1$ when entering Column A and use the value of $A_2$ when entering Column B.

$A_2/A_1 = 3.75/30.00 = 0.125$

For Table E-8, Column A values are: 0.0 < 0.125 < 1.0; Column B value is: < 12; and the K value is found by interpolation:

| Column A | Column B | Column for 3 fasteners |
|---|---|---|
| 0.0 | <l2 | 0.87 |
| 0.125 | <l2 | K |
| 1.0 | <12 | 0.97 |

Solve for K:

$$\frac{(0.125 - 0.0)}{(1.0 - 0.0)} = \frac{(K - 0.87)}{(0.97 - 0.87)}$$

$$\frac{0.125}{1.0} = \frac{(K - 0.87)}{0.10}$$

$$0.0125 = K - 0.87$$

$$K = 0.883$$

and $P_r = K(P_{GROUP}) = (0.883 \times 3342) = 2951$ lbs.

<u>Example 2</u>

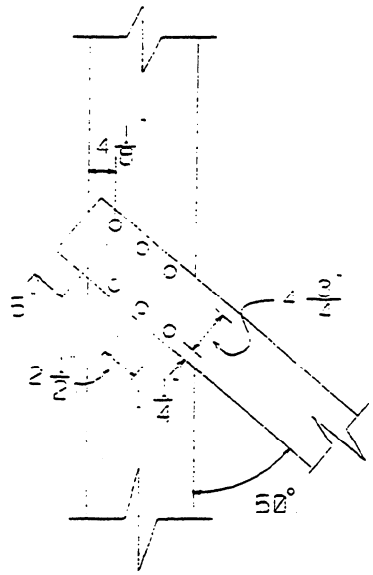


Given:

12 x 12 post with a 2 x 8 brace on each side.

6- 5/8" bolts arranged in two rows of 3 connectors each.

Center of gravity of the bolt group coincides. with the center of gravity of the members.

Determine the allowable load on the group of fasteners.

1. For the side member (loading parallel to grain):

<u>Spacing of bolts in a row</u>

4D = (4)(.625) = 2.5 inches minimum

<u>Spacing between rows of bolts</u>

1.5D = (l.5)(.625) = .938 inches minimum

<u>End distance</u>

Use the value for tension since brace could be either in tension or compression..

7D = (7)(.625) = 4.375 inches minimum

<u>Edge distance</u>

1.5D = (1.5) (.625) = .938 inches

<u>Number of rows of fasteners</u>

Distance between adjacent rows = 4.75", which is greater than 2.5/4 = 0.625. Therefore, analyze as 2 rows of bolts.

Example 2 (Continued)

2 . For the main member (loading perpendicular to grain):

Spacing between rows

L/D = 12/(0.625) = 19.2

5D = (5)(.625) = 3.125 inches minimum < 4.75"

Edge distance

Use 4D since load reversal is possible.

4D = (4) (.625) = 2.50 inches minimum < 4.125"

Determine single bolt value

Side member value = (0.75)(1960) = 1470 Lbs.

Main member value using modified Hankinson's formula:

$$\frac{(0.75)(1990)(1260)}{(1990)(\sin^2 50) + (1260)(\cos^2 50)} = 1114 \text{ LBS}$$

The value for the main member controls.

Determine the capacity of the bolt group

$P_{GROUP}$ = K(No. of fasteners) (single bolt value)

= K(3)(1114)

= K(3342) LBS/row

Reduction factor K is obtained from Table E-8. To enter Table E-8 it is necessary to calculate the cross-sectional -area of the side and main members.

$A_1$ (main member) = (4.75)(12) = 57.00 $in^2$

$A_2$ (side member) = (1.5)(4.75) = 7.125 $in^2$

$A_1/A_2$ = 57.00/7.125 = 8.00

Example 2 (Continued)

Since $A_1/A_2$ > 1, use the value of $A_2/A_1$ when entering Column A and use the value of **A,** when entering column B. (See Table E-8.)

$A_2/A_1$ 7.125/57.00 = 0.125

For Table E-8, Column A values are: 0.0 < 0.125 < 1.0; Column B value is: < 12; and the K value is found by interpolation:

| Column A | Column B | Column for 3 fasteners |
|---|---|---|
| 0.0 | <l2 | 0.87 |
| 0.125 | <l2 | K |
| 1.0 | <l2 | 0.97 |

By interpolation, K = 0.883

and $P_r = K(P_{GROUP})$

= [(0.883)(3342 lbs/row](2 rows) = 5902 lbs.