APPENDIX D Alternative Pile Types

Table of Contents

Nicholson Pin Pile D-2
Tubex Grout Unit D-4
GeoJet Foundation Unit D-5

Nicholson Pin Pile

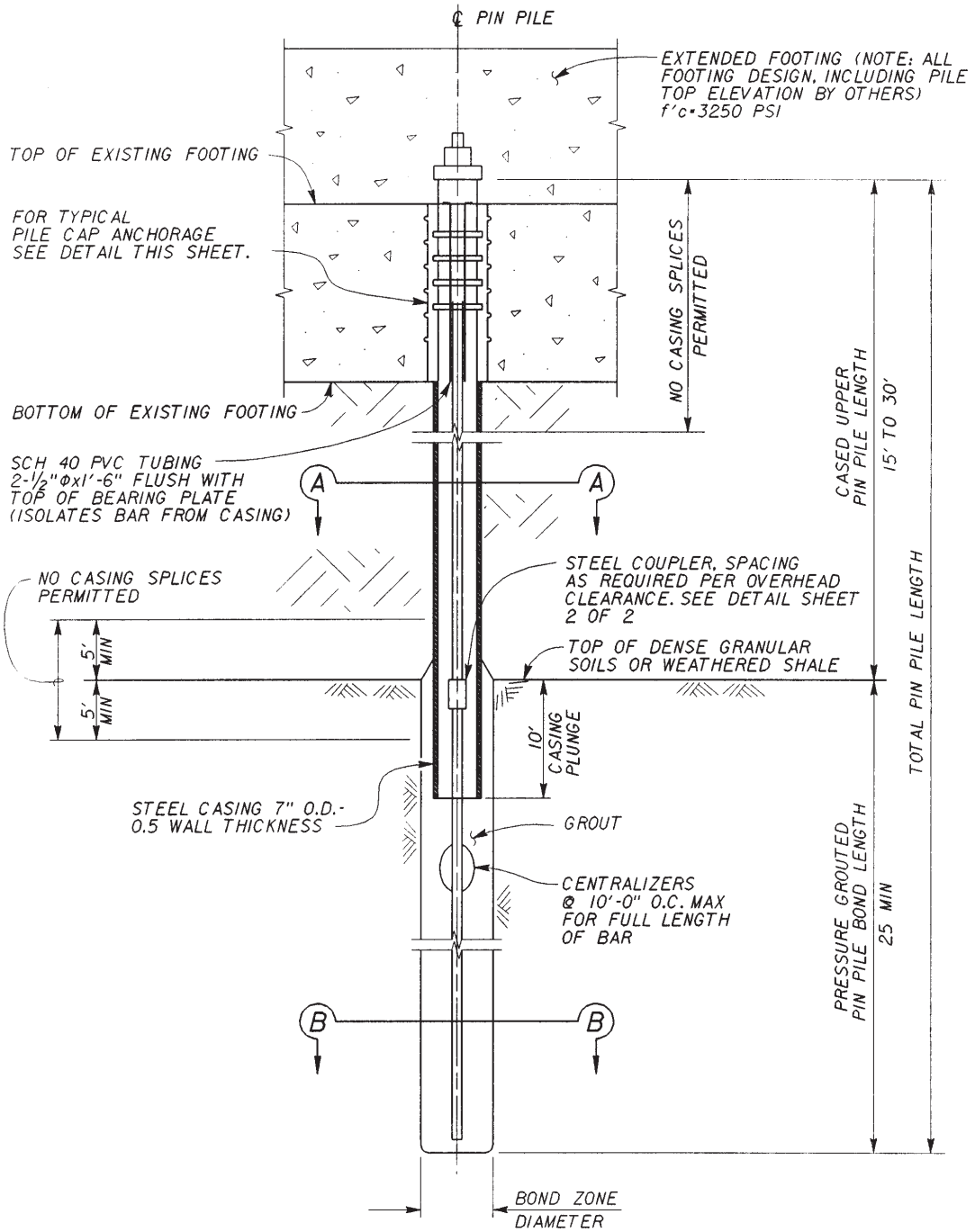

PIN PILE DETAIL
NO SCALE

Nicholson Pin Pile

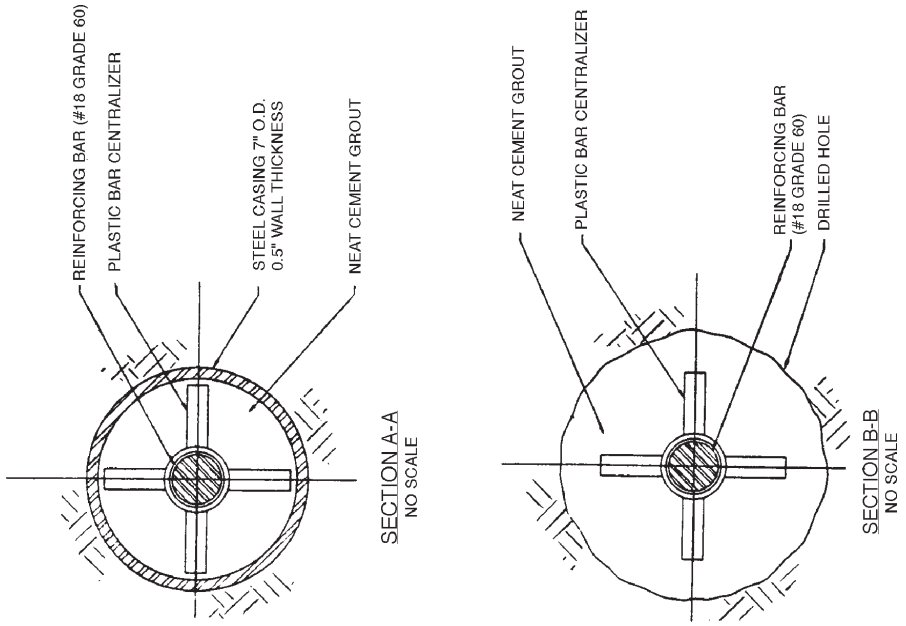

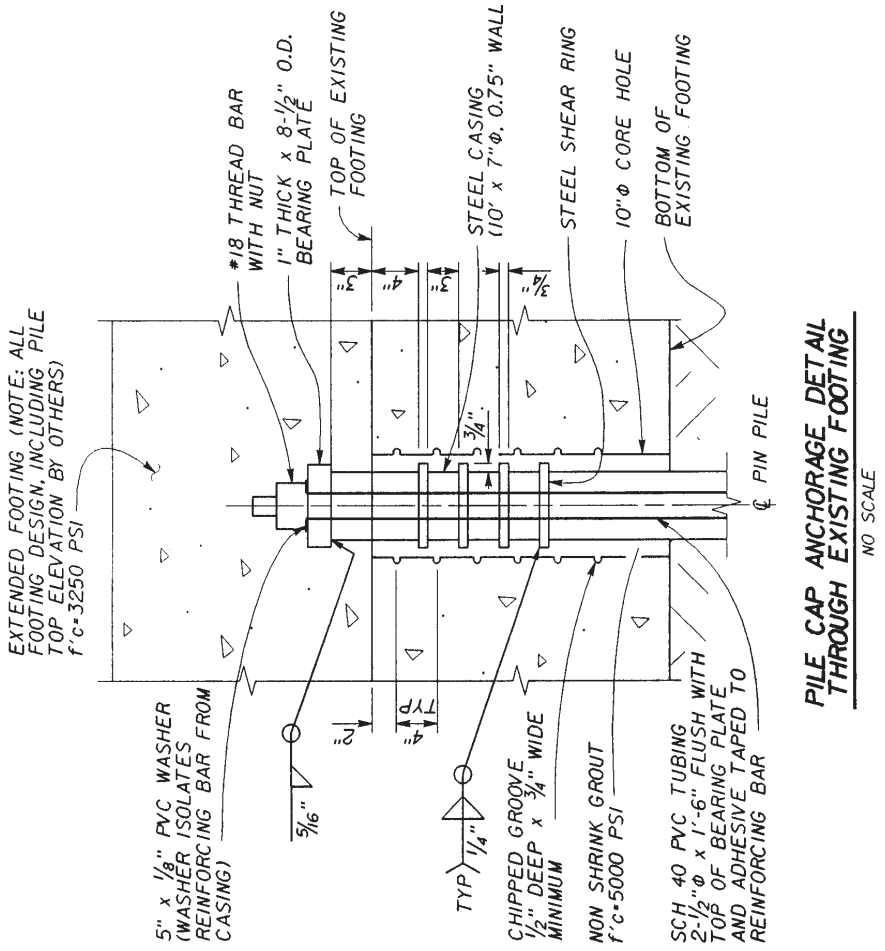

PILE CAP ANCHORAGE DETAIL THROUGH EXISTING FOOTING

NO SCALE

Tubex Grout Unit

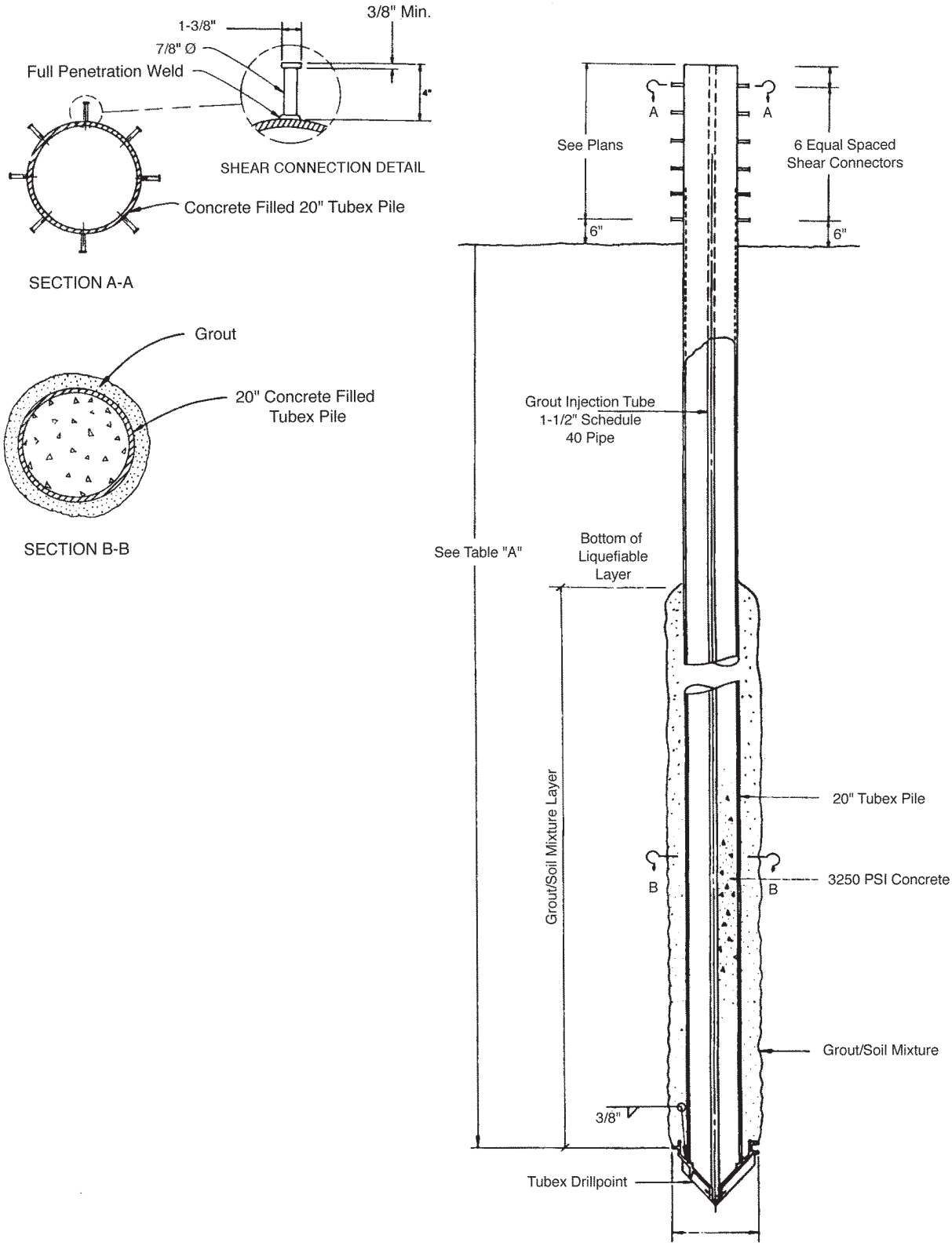

GeoJet Foundation Unit

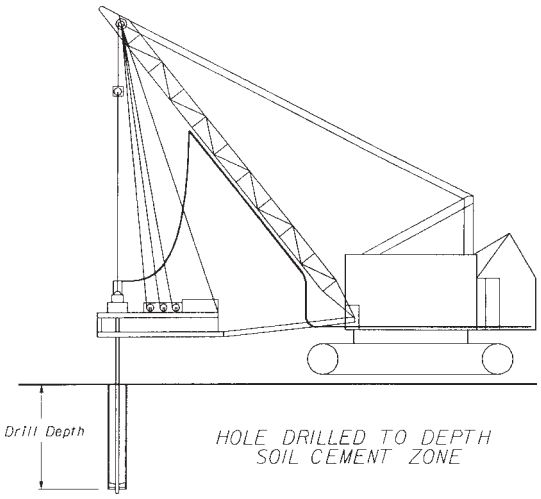

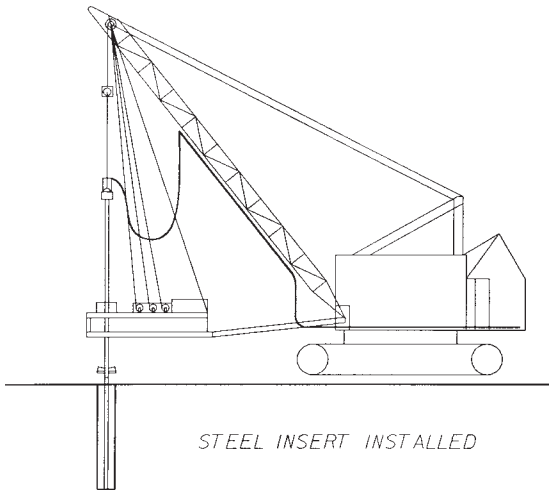

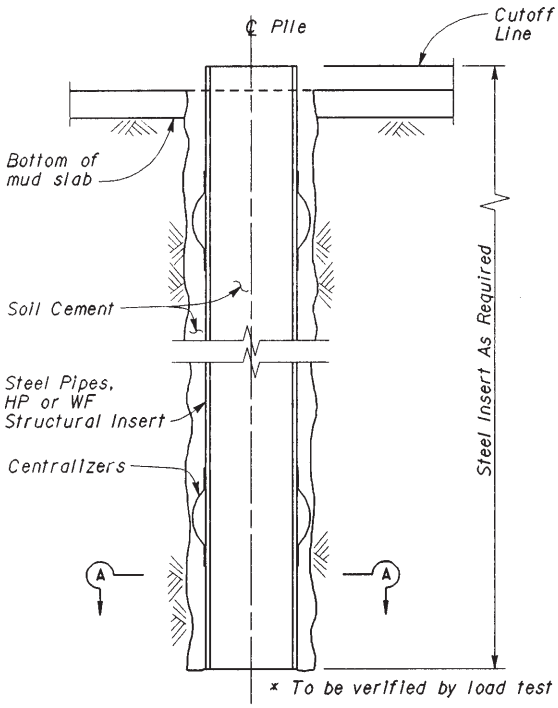

GeoJet FOUNDATION MEMBER
NO SCALE

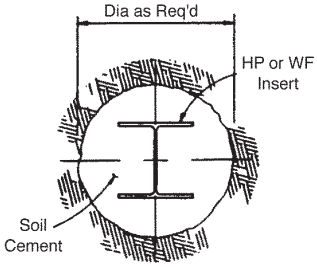

SECTION A-A
Not to Scale

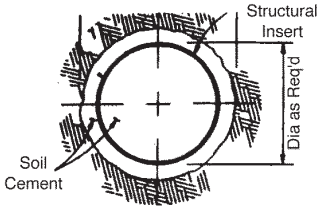

SECTION A-A
Not to Scale

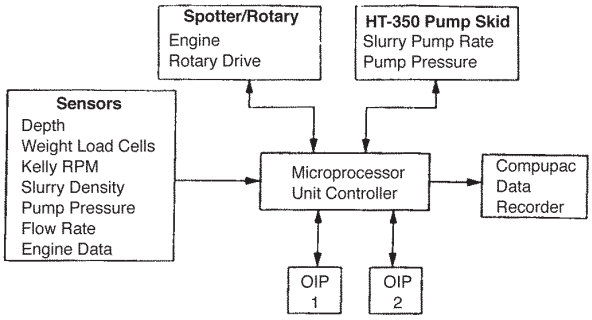

Operator Interface Panels (OIP)

GeoJet Process Control Schematic